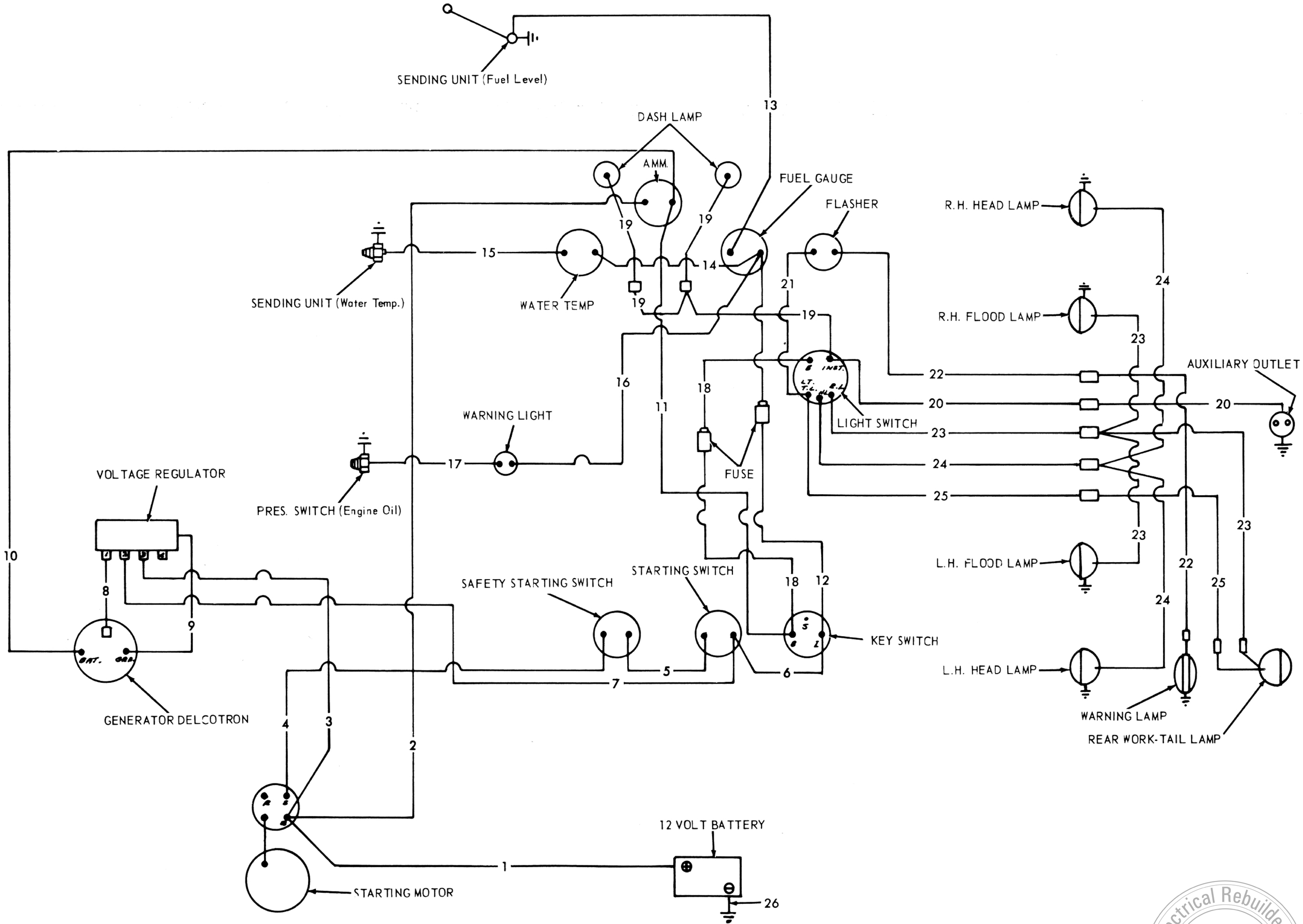

ALLIS-CHALMERS
MODEL 170 WITH DIESEL ENGINES

Electrical Rebuilder's ERA FOUNDED 2001 ASSOCIATION