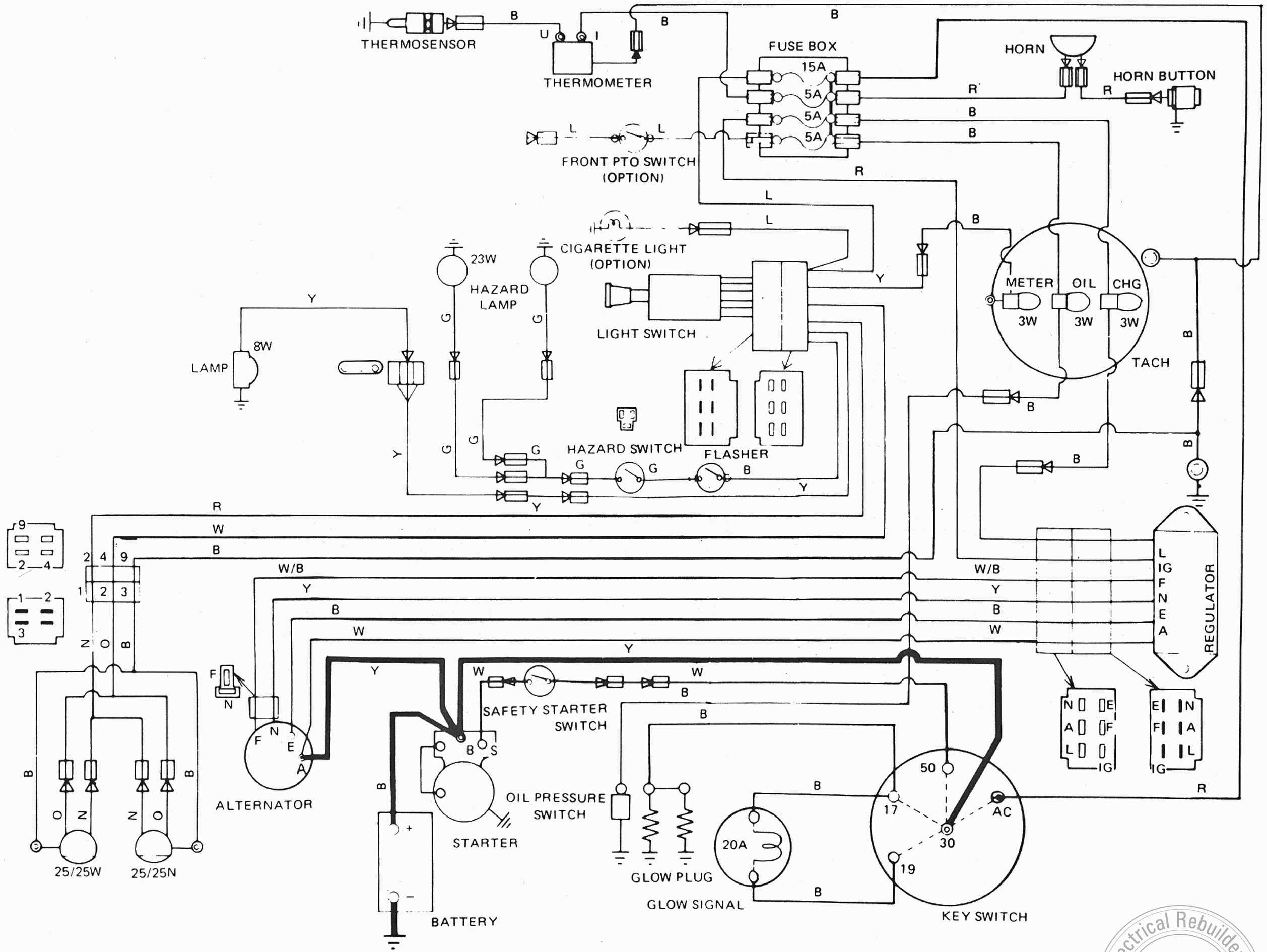

Electrical Rebuilder's ERA FOUNDED 2001 ASSOCIATION