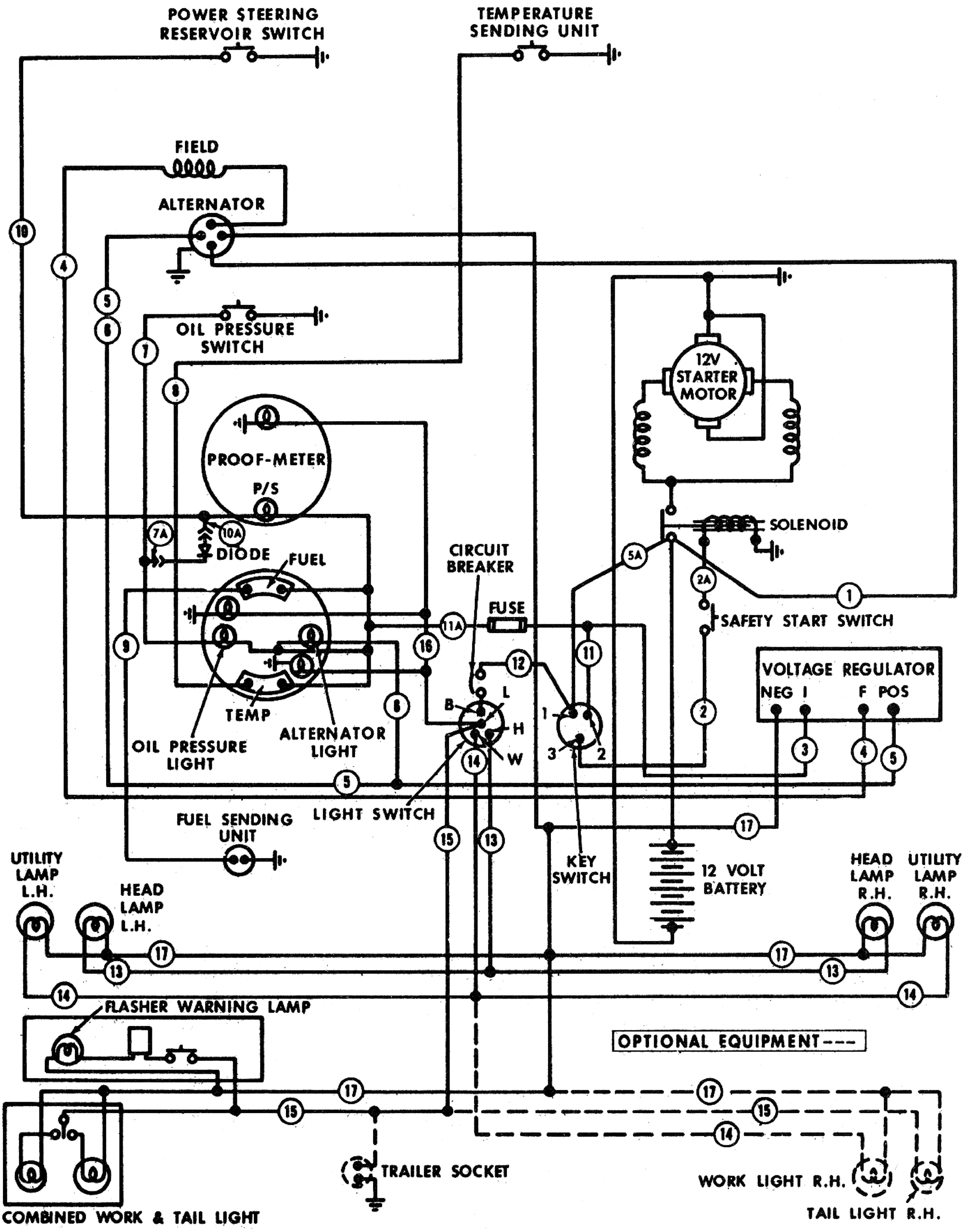

1 BROWN
2A RED
3 YELLOW
4 GREEN
5 RED
5A BROWN-WHITE STRIPE
6 YELLOW-BLACK STRIPE
7A WHITE
8 RED-WHITE STRIPE
9 ORANGE
10A GREEN-BLUE STRIPE
11A BLACK-GREEN STRIPE
12 YELLOW
13 GREEN
14 RED
15 BLUE-WHITE STRIPE
16 BLUE-RED STRIPE
17 BLACK

FORD TRACTORS: MODELS WITH ALTERNATOR 8000, 8600, 8700 9000, 9600, 9700 TW-10, TW-20, TW-30

Electrical Rebuilder's ERA FOUNDED 2001 ASSOCIATION