Ford 8N Electrical System
prior to serial # 263844

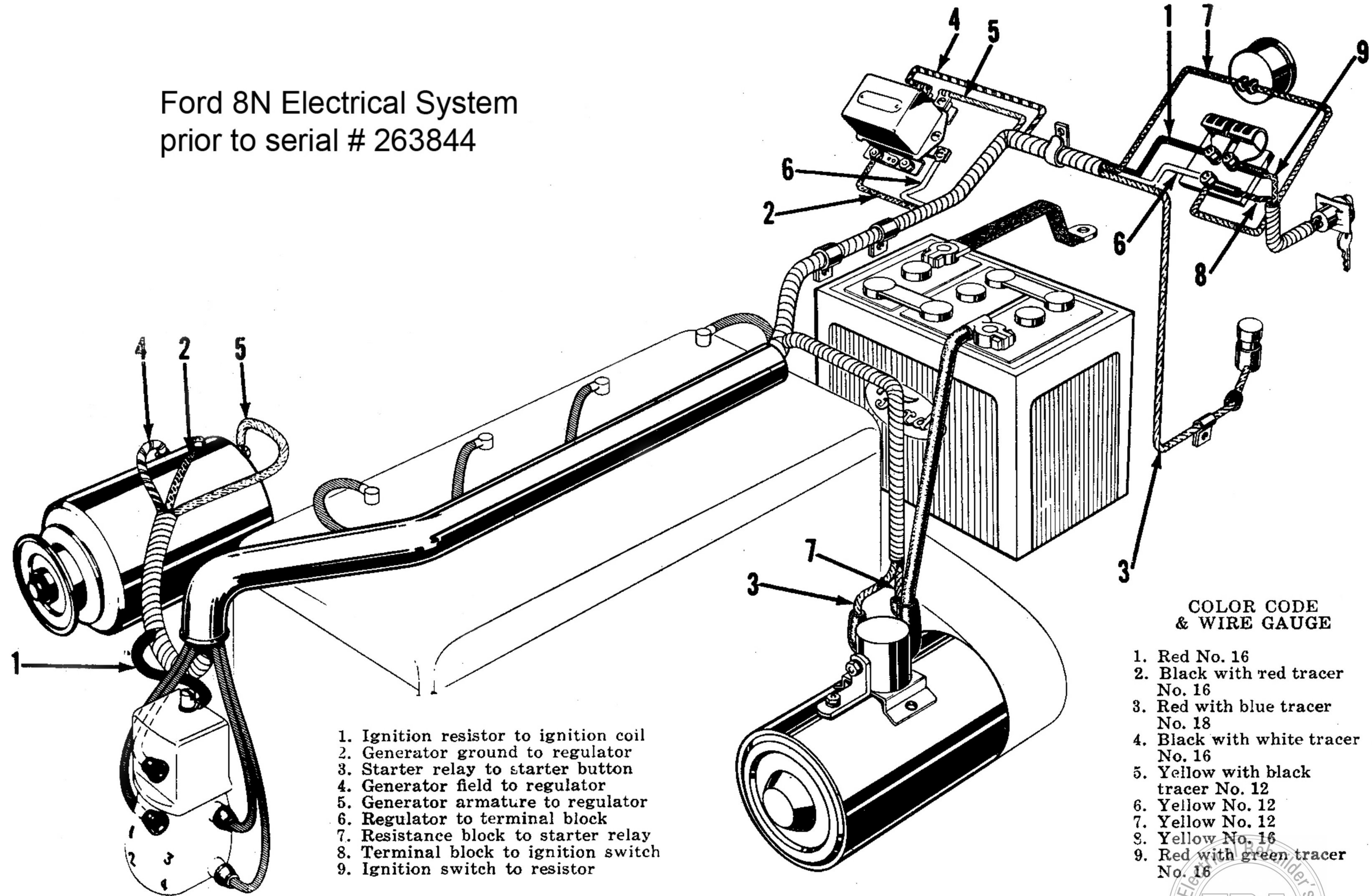

1. Ignition resistor to ignition coil
2. Generator ground to regulator
3. Starter relay to starter button
4. Generator field to regulator
5. Generator armature to regulator
6. Regulator to terminal block
7. Resistance block to starter relay
8. Terminal block to ignition switch
9. Ignition switch to resistor

COLOR CODE
& WIRE GAUGE

1. Red No. 16
2. Black with red tracer No. 16
3. Red with blue tracer No. 18
4. Black with white tracer No. 16
5. Yellow with black tracer No. 12
6. Yellow No. 12
7. Yellow No. 12
8. Yellow No. 16
9. Red with green tracer No. 16

Electrical Reminder's ERA FOUNDED 2001 ASSOCIATION