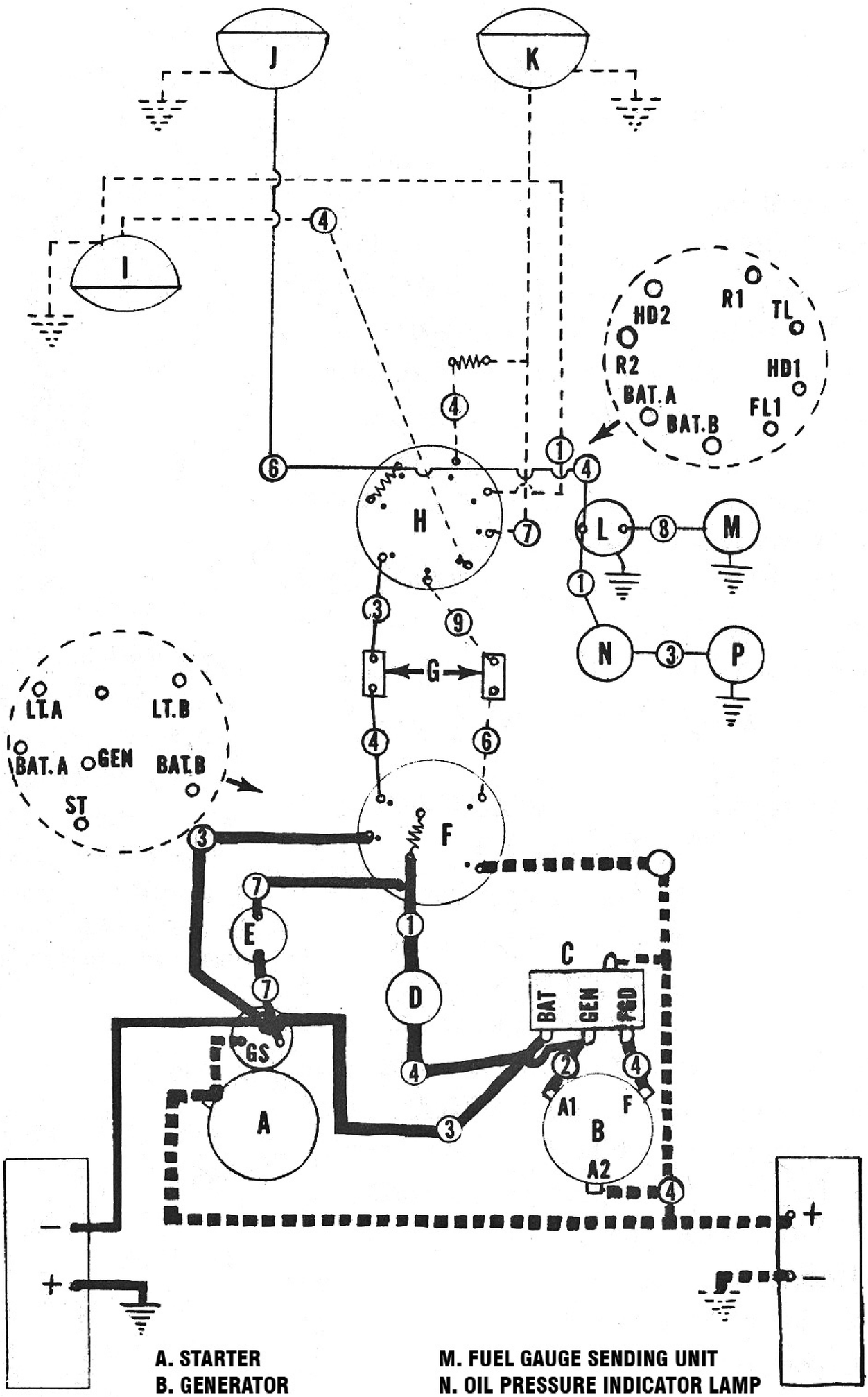

A. STARTER
B. GENERATOR
C. REGULATOR
D. CHARGE INDICATOR LAMP
E. STARTER SAFETY SWITCH
F. KEY SWITCH
G. CIRCUIT BREAKER
H. LIGHT SWITCH
L. FUEL GAUGE

M. FUEL GAUGE SENDING UNIT
N. OIL PRESSURE INDICATOR LAMP
P. OIL PRESSURE SENDING UNIT
S. IGNITION COIL
T. DISTRIBUTOR
1.RED
2.WHITE
3.BLUE
4.BLACK

5. PINK
6. GREEN
7. YELLOW
8. ORANGE
9. BROWN

Electrical Rebuilder's ERA FOUNDED 2001 ASSOCIATION