TECH BASICS 2

DELCO 10DN EXTERNAL REGULATOR CHARGING SYSTEMS

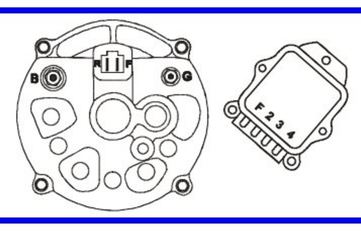

The 10DN charging system was widely used during the 1960s and early 1970s. It was used primarily on General Motors vehicles, but it can also be found on AMC, International and many industrial applications. There are variations of the wiring depending on the application. Some have a transistorized voltage regulator. Some have a separate charge-light relay. This article discusses the most common system you are likely to work on -- classic GM vehicles. ***Figure 1*** shows the components and how they are connected for a charge-light system. Gauge-only systems will be discussed in the next section. Here's a list of the components as shown in ***Figure 1*** and some common problems. You should read this list and familiarize yourself with the parts no matter which system you are troubleshooting.

A **Alternator** -- be sure to clean corrosion off the grounding areas where the alternator mounts**.** Make certain the two-terminal "R-F" plug is corrosion-free. It's not unusual to find the plastic plug has been replaced with two crimp-on spade terminals. This is not good. It's very easy for the connectors to short to ground or to each other. Touching the "F" terminal to ground will destroy the voltage regulator faster than you can say, "Oh Nuts!" We recommend replacing a missing plug with a new one (***see Figure 1***). It's also a good idea to coat the terminals with dielectric grease to stop corrosion.

B **Voltage regulator** -- must be properly grounded. Some vehicles have a ground wire from the alternator to a regulator mounting screw. If a ground wire isn't there, you should install one. Remember, these are older and usually rusty vehicles, and you can't count on body grounds being in good shape. Use dielectric grease on all connections.

C **Indicator Light** -- bulb can fail. *Not used in gauge-only vehicles*.

D **Resistor** -- allows current to flow in case of bulb failure. Most GM vehicles use a 10 ohm resistor wire. This wire is specially calibrated to offer a certain resistance over its length. Be careful when replacing wires on these vehicles. Try to reuse the old wire whenever possible. *Not used in all vehicles.*

E **Ignition switch**

F **Charging system fuse** -- located in the fuse box. It may also protect other dash warning lights and gauges.

G **Connection block --** (see ***Figure 2***) Some vehicles use a horn relay. Some use a small junction block, and some have all the connections inside the wiring harness. By the late '60s GM moved this connection to the battery cable connection of the starter solenoid. This is a good place to check for poor connections. Use dielectric grease to coat all connections.

H **Fusible link(s)** -- protect the wire to the alternator B+ stud and the voltage regulator "3" terminal. Some cars have no fusible links. Some cars have two - one on the alternator B+ wire and one on the regulator "3" wire.

I **Battery --** should be fully charged and load tested before diagnosing any charging problem.

J **Ammeter --** some vehicles had only an ammeter. Some had a charge-light and ammeter.

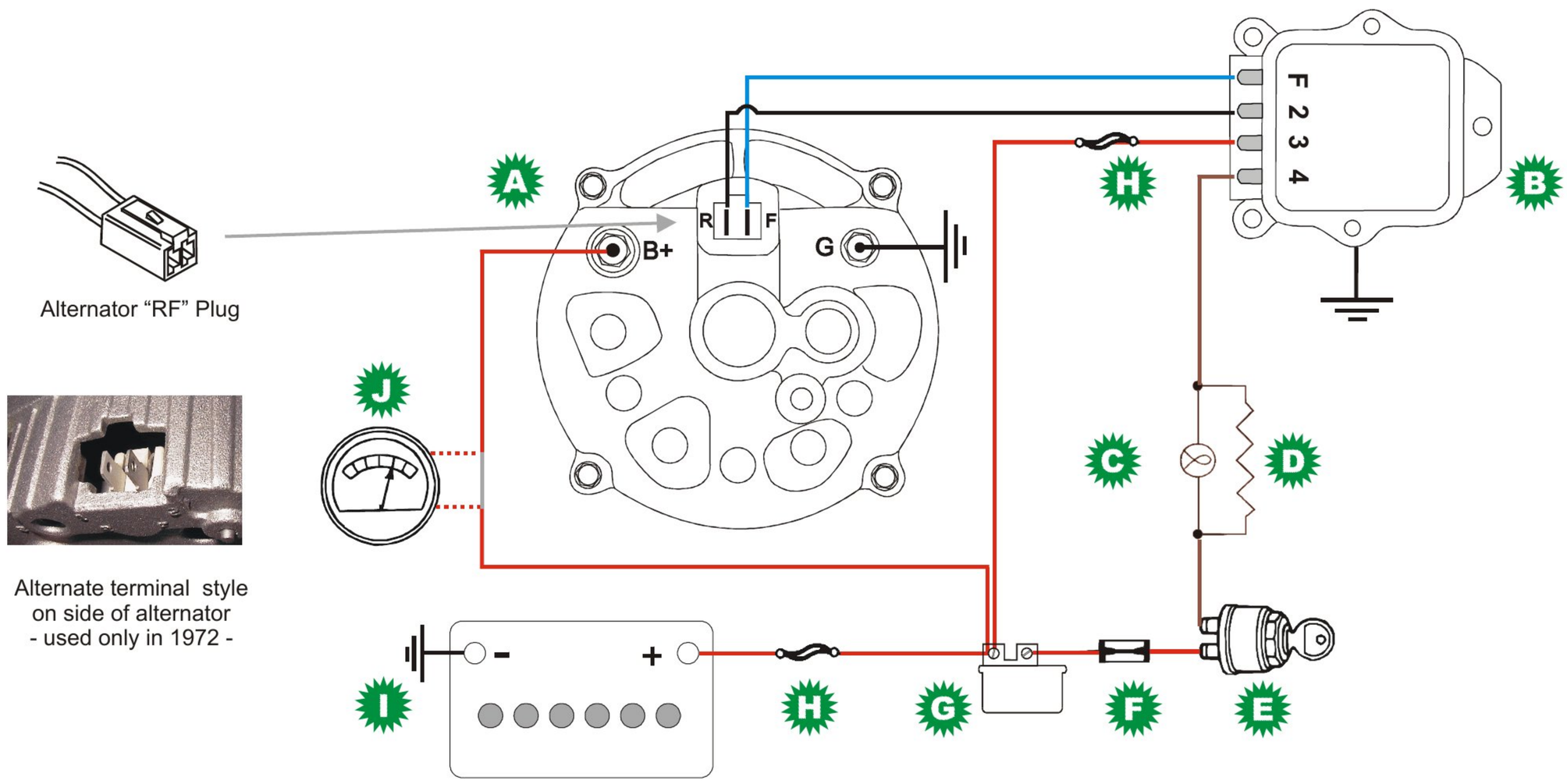

Figure 1 -- Components of a typical charging system with a charge-light.

Copyright © 2003 Wesley S. Grueninger - All Rights Reserved

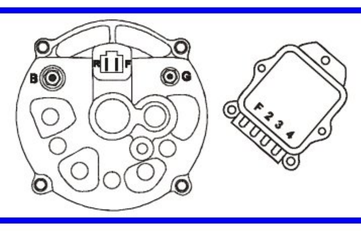

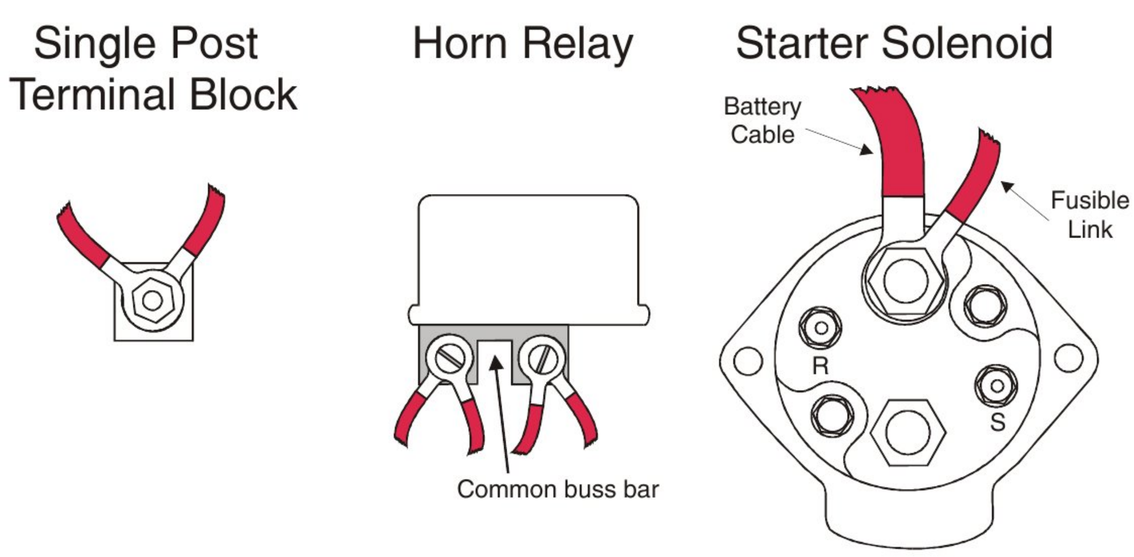

COMMON JUNCTION STYLES USED WITH 10DN SYSTEMS

(always check for poor connections)

Most early 1960's cars use either the single post terminal or the horn relay as a junction block for wiring harness connections. Some cars have fusible links and some don't.

By the late 1960's most had moved the alternator B+ wire to the starter solenoid. Fusible links are always found within the first 4" of the wire.

Figure 2 -- Types of alternator B+ wire connections

CHARGE-LIGHT SYSTEM - How it Works

The system with a charge-light has <u>two stages</u> of operation.

The first stage is KOEO (Key on, Engine off)

During KOEO current flows from the battery ⇨ through the fuse ⇨ through the ignition switch ⇨ through the charge-light/resistor ⇨ to the voltage regulator "4" terminal.

What's the resistor for?

1. It's there as a backup for the charge-light bulb. If the filament in the bulb breaks, current will bypass the bulb and still get to the "4" terminal on the voltage regulator. Without the resistor, a blown charge-light bulb could disable the charging system!
2. It allows more current to flow to the "4" terminal than just the bulb filament alone. This causes the alternator to start charging at low engine RPM.

As soon as the voltage regulator "sees" current at the "4" terminal it does two things:

1. It directs the current at the "4" terminal to ground. This completes the charge-light circuit and the bulb lights up.
2. It directs current from the "3" terminal out of the "F" terminal to the alternator. Current flows in the "F" terminal on the alternator and causes the rotor to become an electromagnet.

That's it for KOEO. The charge-light is on and the alternator is energized. It's time to start it up.

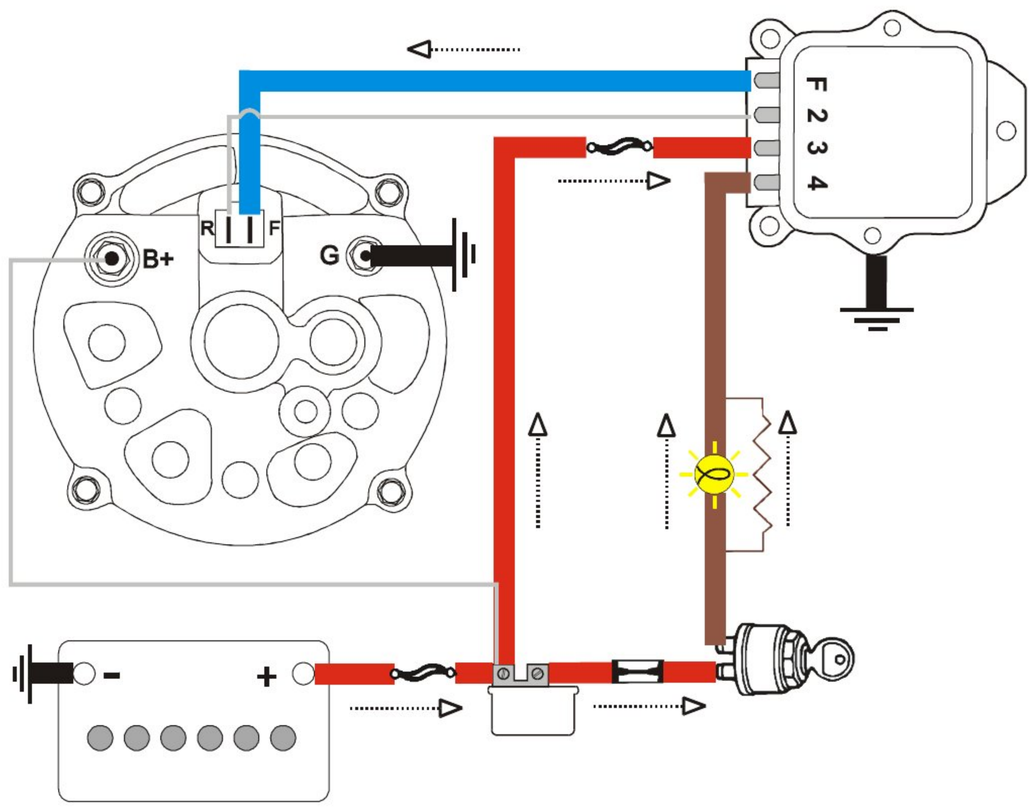

KOEO current flow

- **Regulator grounds "4" terminal**
- **Regulator connects "3" terminal to "F" terminal**
- **Charge-light is on**
- **Alternator field is energized**

Figure 3 -- Charge-light system KOEO (key on, engine off)

Copyright © 2003 Wesley S. Grueninger - All Rights Reserved

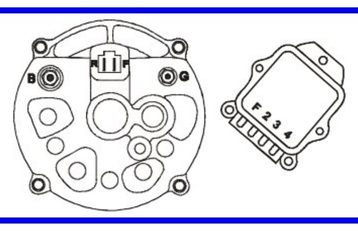

The second stage is KOER
(Key on, Engine running)

As soon as the alternator starts charging it sends current out the "R" terminal to "2" terminal on the voltage regulator.

The current leaving the alternator "R" terminal is not at full charging-system voltage. On a good alternator, it will always measure about one-half the alternator charging voltage. For example, if you measure 14.0 volts across the battery, the "R" voltage at the alternator will be approximately 7.0 volts.

The alternator "R" terminal output has only one purpose. It goes to the voltage regulator "2" terminal. As soon as the voltage regulator senses voltage at the "2" terminal, it opens the connection between the "4" terminal and ground, thereby turning off the charge-light.

Once the charge-light is off, the system will keep charging as long as the alternator is spinning. The charge-light circuit has been grayed out in ***Figure 4*** to indicate that it is no longer needed.

If alternator speed drops below a certain level, it can't produce a strong enough "R" signal and the voltage regulator will turn on the charge-light. If you are having problems with the charge-light coming on at idle, check that the engine idle speed is set to specs. Pulley size can also affect alternator speed. Many speed enthusiasts install a very large pulley to slow down the alternator and gain horsepower. While this might help their track times, it makes it impossible for the charging system to work at low speeds.

And that's it. The regulator is "locked" on as long as it receives a signal from the alternator "R" terminal. Anything that causes the alternator to stop charging, such as a broken belt or worn brushes will interrupt the "R" signal and the regulator will turn the charge-light on to signal the driver of a problem.

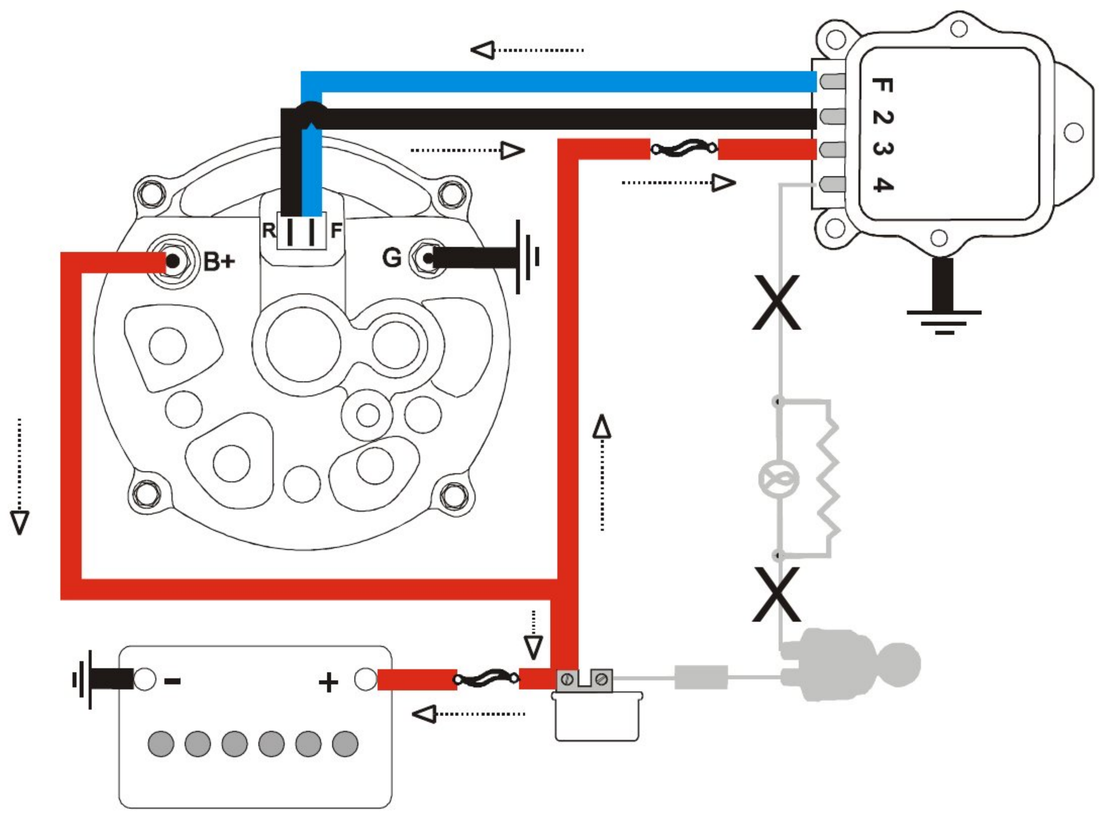

KOER current flow

- **Alternator "R" terminal produces ½ voltage to regulator "2" terminal**
- **Regulator opens "4" terminal and charge-light goes out**
- **Current produced by alternator flows from B+ terminal**
- **Regulator varies power to "F" terminal to control alternator output**

Figure 4 -- Charge-light system KOER (key on, engine running)

Copyright © 2003 Wesley S. Grueninger - All Rights Reserved

TECH BASICS 2

DELCO 10DN EXTERNAL REGULATOR CHARGING SYSTEMS

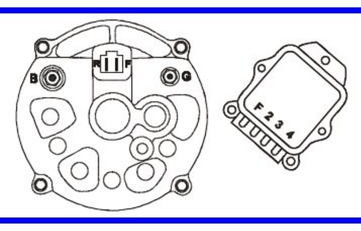

GAUGE-ONLY SYSTEM - How it works

Gauge-only systems have <u>two stages</u> of operation.

The first stage is KOEO (Key on, Engine off)

During KOEO current flows from the battery ⇨ through the fuse ⇨ through the ignition switch ⇨ to the voltage regulator "2" terminal. As soon as the voltage regulator "sees" voltage at the "2" terminal, it directs current from the "3" terminal out of the "F" terminal to the alternator "F" terminal. This current flow causes the rotor to become an electromagnet.

The voltage regulator "4" terminal is not used in gauge-only systems.

That's it for KOEO. The alternator is energized. It's time to start it up.

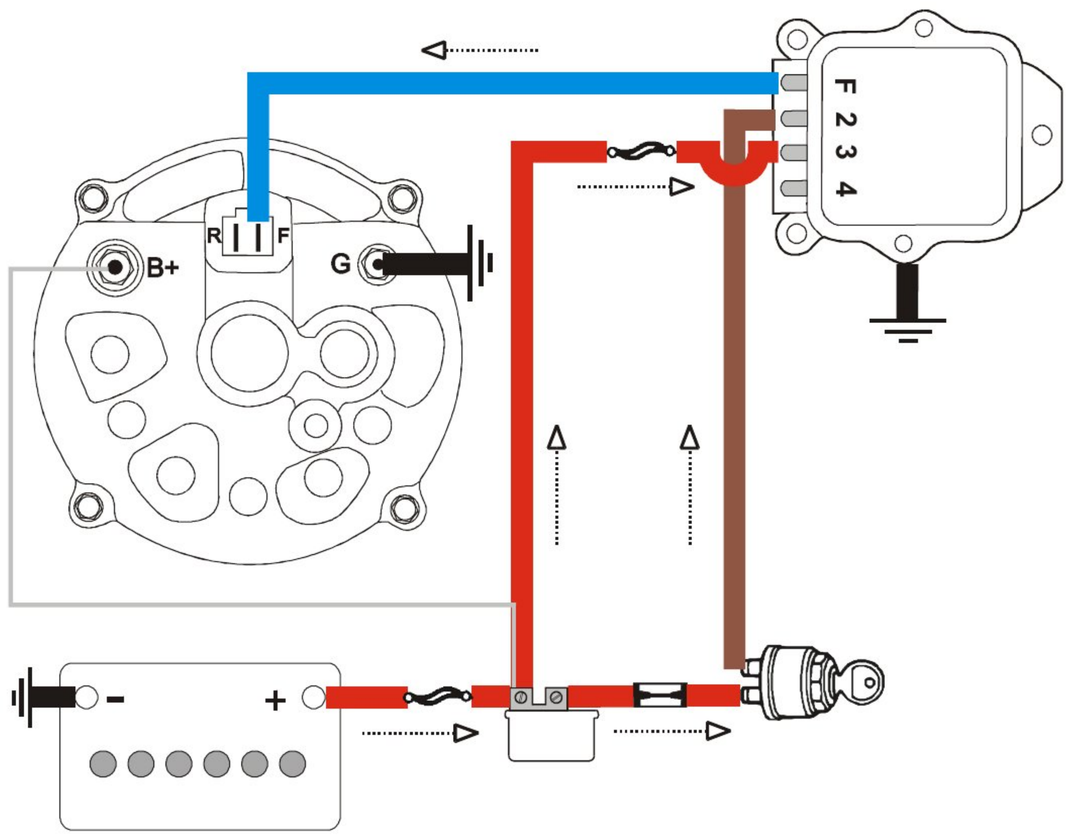

KOEO current flow

- **Ignition switch sends power to the regulator "2" terminal**
- **Regulator connects "3" terminal to "F" terminal**
- **Alternator field is energized**

Figure 5 -- KOEO (Key on, Engine off)

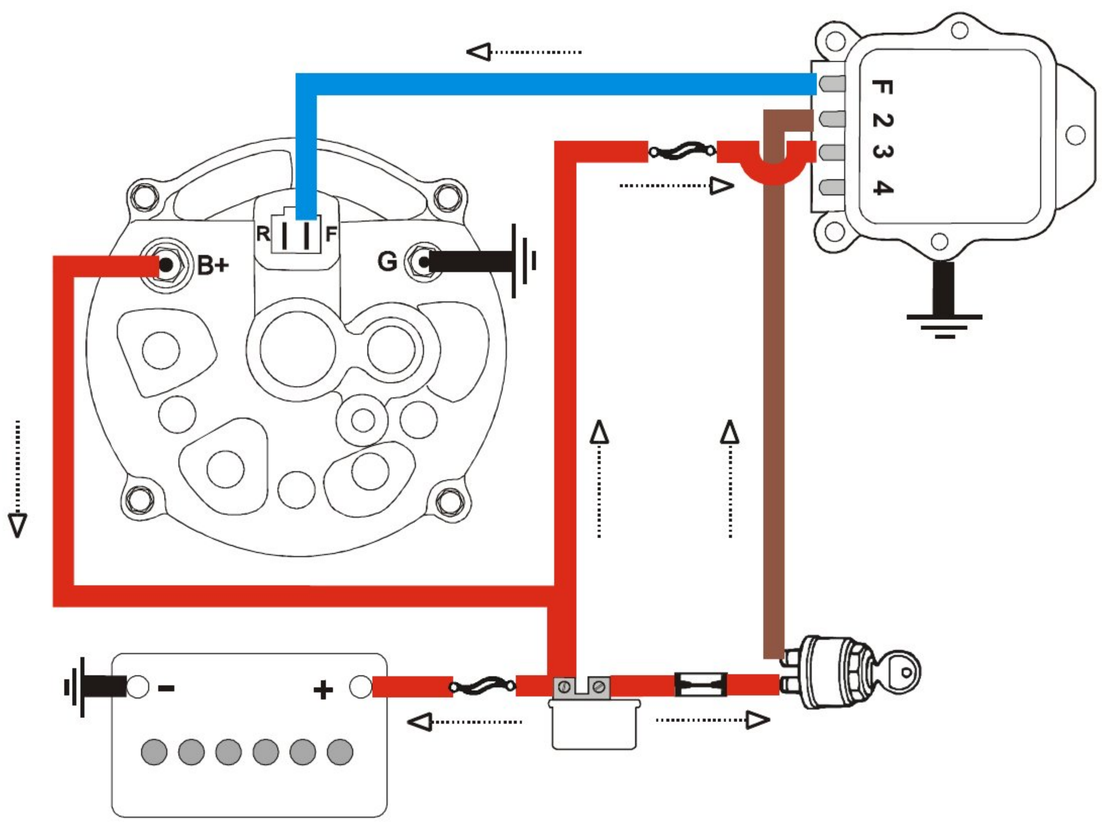

KOER current flow

- **Ignition switch sends power to the regulator "2" terminal**
- **Current produced by alternator flows from B+ terminal**
- **Regulator varies power to "F" terminal to control charging**

Figure 6 -- KOER (Key on, Engine Running)

The second stage is KOER (Key on, Engine running)

As soon as the alternator starts charging it sends current out the "B+" terminal. The charging system will keep working as long as the ignition key is on and the engine is running.

Copyright © 2003 Wesley S. Grueninger - All Rights Reserved

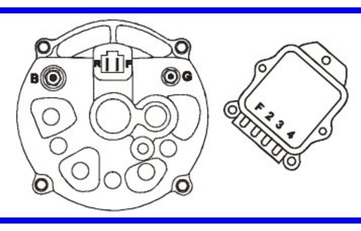

HOW TO TEST AND REPAIR

START BY DOING A CHARGING SYSTEM TEST.

Step 1. The battery must be fully charged and load tested. The engine must be off. Be sure the alternator belt is properly tensioned. Connect the negative lead of a voltmeter to the negative battery post and the positive voltmeter lead to the positive battery post. Write down this reading - it will be referred to as "base voltage". Do both of the following tests:

LOAD TEST: Start the engine. Turn the headlights on and the heater/ac fan motor to high. Increase engine speed to 2000 RPM. Check the voltage across the battery terminals. See chart for results.

LOAD TEST VOLTAGE READINGS:	*RESULT:*
Voltage increases at least 0.5 volts over "base voltage"	***Pass***
Voltage does not increase at least 0.5 volts over "base voltage"	***Fail***

NO-LOAD TEST: Turn off the accessories, decrease engine speed to 1500 RPM and check the voltage across the battery terminals again. See chart for results.

NO-LOAD TEST VOLTAGE READINGS:	*RESULT:*
Voltage is less than 2.0 volts over "base voltage"	***Pass***
Voltage is more than 2.0 volts over "base voltage"	***Fail***

- ✓ ***If both LOAD TEST and NO-LOAD TEST Pass and charge-light is out (if present),*** the charging system is working correctly.
- ✓ ***If LOAD TEST Fails***, skip to ***Step 2***.
- ✓ ***If NO-LOAD TEST Fails***, remove the plug from the voltage regulator. If overcharging stops, skip to ***Step 2***. If still overcharging with the plug removed, there is a short in the wiring harness between the "3" wire and the "F" wire. Repair and repeat ***Step 1***.

Steps 2 - 4 are performed with the engine off

Step 2. Use a voltmeter or a test-light and check for power at the B+ stud on the alternator and the "3" terminal at the regulator. If both have power, then skip to ***Step 3***. If neither has power, check the fusible link (if so equipped). If the alternator B+ has power, but not the regulator "3" terminal, check the junction points shown in ***Figure 2***.

Step 3. Remove the wiring harness plugs from the voltage regulator and the alternator. Use a short piece of wire to jump from terminal "F" to terminal "3" of the voltage regulator plug as shown in ***Figure 7***. Use a test-light or a voltmeter to test for power at the "F" terminal of the alternator plug. If there is no power at the "F" terminal of the alternator plug, check for bad connections or a broken wire.

Keep the jumper wire in place and reconnect the alternator plug. Touch the flat edge of a screwdriver to the alternator rotor shaft at the center of the pulley. You should feel a magnetic attraction. If not, the alternator should be replaced. Reconnect the voltage regulator plug and go to ***Step 4*** for Charge-Light System or ***Step 7*** for Gauge-Only System.

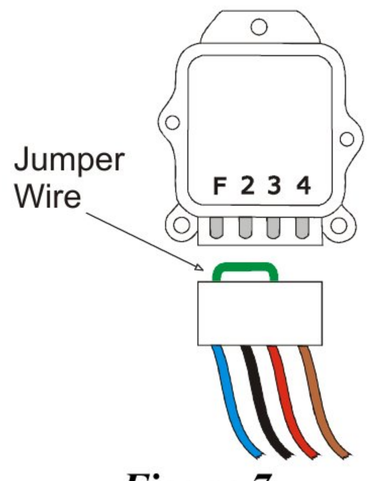

Figure 7

Step 4. ***CHARGE-LIGHT SYSTEM:*** Turn the key to the "run" position and look at the charge-light. If it comes on, skip to ***Step 5***. If no light, remove the plug from the voltage regulator and, with the key still on, use a voltmeter or a test-light to check for power at the regulator plug "4" terminal. If the regulator plug "4" terminal does not have power, the most likely cause is a bad fuse. If the fuse is good, it's time to start checking for unusual problems. Check for corroded connectors, corroded fuse box terminals, cut wires, loose plug at the instrument cluster or a bad ignition switch. What about the bulb?

Copyright © 2003 Wesley S. Grueninger - All Rights Reserved

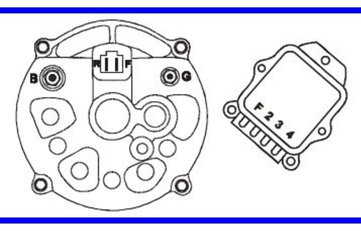

A bad bulb will not prevent power from flowing to the regulator plug "4" terminal, since the resistor offers an alternate path. The time to test the bulb is after restoring power to the regulator plug "4" terminal. Just ground the "4" terminal from the voltage regulator plug - the charge-light will come on if the bulb is good. Reconnect the plug to the voltage regulator. If the charge-light comes on, go to ***Step*** 5. If the charge-light does not come on, check that the voltage regulator is properly grounded. If the charge-light is still not on, replace the voltage regulator and redo ***Step 4***.

Step 5. ***CHARGE-LIGHT SYSTEM:*** Start the engine. Do the following test at idle, with the engine warm and the voltage regulator plugged in. Test the voltage at the "2" terminal and the "4" terminal of the voltage regulator. The "2" terminal should be about one-half the voltage of the "4" terminal. If no voltage is present at the voltage regulator "2" terminal, check the voltage directly at the "R" terminal on the alternator. If correct voltage is at the alternator, repair the wire, If there is no voltage or low voltage directly at the alternator, replace the alternator. Go to ***Step 6***.

Step 6. ***CHARGE-LIGHT SYSTEM:*** Reconnect everything and start the engine. Is the charge-light off? If the charge-light is still on, then the voltage regulator is bad. Replace the voltage regulator. At this point, you have verified every function of the system. Go to ***Step 8***.

Step 7. ***GAUGE-ONLY SYSTEM:*** Turn the key to the "run" position. Remove the plug from the voltage regulator and, using a voltmeter or a test-light, check for power at the plug "2" terminal. If the plug "2" terminal does not have power, the most likely cause is a bad fuse. If the fuse is good it's time to start checking for unusual problems. Check for corroded connectors, corroded fuse-box terminals, cut wires or a bad ignition switch. When there is power at the voltage regulator plug "2" terminal, go to ***Step 8.***

Step 8. ***CHARGE-LIGHT SYSTEM or GAUGE-ONLY SYSTEM:*** Be sure all wires are reconnected and run the engine at 1500 RPM for several minutes or until battery voltage stabilizes. Repeat the ***LOAD*** and ***NO-LOAD*** tests done in S***tep 1***.

If the system fails the ***LOAD*** test, remove the alternator and have it bench tested. Replace the alternator if bad. If the system fails the ***LOAD*** test with a good alternator, replace the voltage regulator.

If the system fails the ***NO-LOAD*** test, replace the voltage regulator.

The final test is to verify that the entire system is working correctly. Repeat the ***LOAD*** and ***NO-LOAD*** tests done in ***Step 1***.

About the author:

This Tech Basics guide was written by Wesley S. Grueninger. Wes has been in the rebuilding industry since 1975, the year he started Auto Lab. Auto Lab specializes in remanufacturing import alternators and starters in addition to stocking a full line of domestic units. Many hours of research have gone into the Tech Basics series and we want to hear from you if you have any suggestions or comments. Contact us at autolab@execpc.com.



Copyright © 2003 Wesley S. Grueninger - All Rights Reserved