Leece-Neville heavy-duty electrical systems maintenance and diagnosis

Part I

The objective of this training manual is to provide the customer with a step by step, easy to understand outline of the procedures for maintaining and diagnosing a heavy-duty vehicle's electrical system.

As a service technician, it's your responsibility to make sure the vehicles are well-maintained. And it's your job to accurately diagnose and repair equipment problems if they occur.

Unfortunately, problems with the vehicle's electrical system are often misdiagnosed. What happens as a result? Well, most industry studies indicate that approximately 55 percent of alternators and starters returned under warranty to manufacturers, and noted as defective, are later discovered to be in fine working order.

Now it's certainly true that electrical components can become damaged due to excessive heat and vibration, voltage spikes, careless handling and misapplication. Components can also become damaged by excessive heat, whenever they are forced to operate at continuously high levels of electrical output. (For instance, the latter addition of even a few accessories—such as mobile telephones, CB radios, portable CD players, coolers, microwaves, satellite tracking, bunk heaters, inverters, etc.—can overburden the amperage capacity of the originally installed alternator.)

Generally speaking, however, electrical components—such as alternators and starters—are designed to perform trouble-free for many thousands of miles.

So with knowledge and training, you'll be able to properly maintain your company's vehicles. And if problems occur in the electrical system, you'll be able to accurately diagnose and correct them, instead of immediately assuming that an electrical component itself is faulty.

The Heavy-Duty Vehicle's Electrical System

If a technician does not have a clear understanding of how a vehicle's electrical system works, it's nearly impossible to accurately diagnose a problem.

A vehicle's electrical system is comprised of three elements: the battery system, the charging system, and the starting system. All three systems work together as a team.

As with any team, each member has a specific and important job to perform. When diagnosing an electrical problem, it's necessary to consider each team member as potentially contributing to the problem. See Figure 1, page 7.

That's why we've organized this training manual to cover the battery system first, followed by the charging system and finally the starting system.

Each of these three sections starts with an overview of how the system works, then moves on to cover various preventive maintenance and diagnostic procedures.

The Importance of Using Proper Preventive Maintenance Procedures

Throughout this manual, we'll underscore the importance of preventive maintenance, and show you the steps to become very proficient at it. Equally important, we'll show you how to perform preventive maintenance safely.

The advantages of performing preventive maintenance can be summarized in two ways. First, it enhances the lifespan of electrical components; and second, it improves the likelihood of trouble-free operation, thereby minimizing vehicle downtime.

The Importance of Using Proper Diagnostic Procedures

There's no question that diagnosing a problem in a vehicle's electrical system can be tedious and time consuming. However, spending the upfront time required is much more efficient than hav-

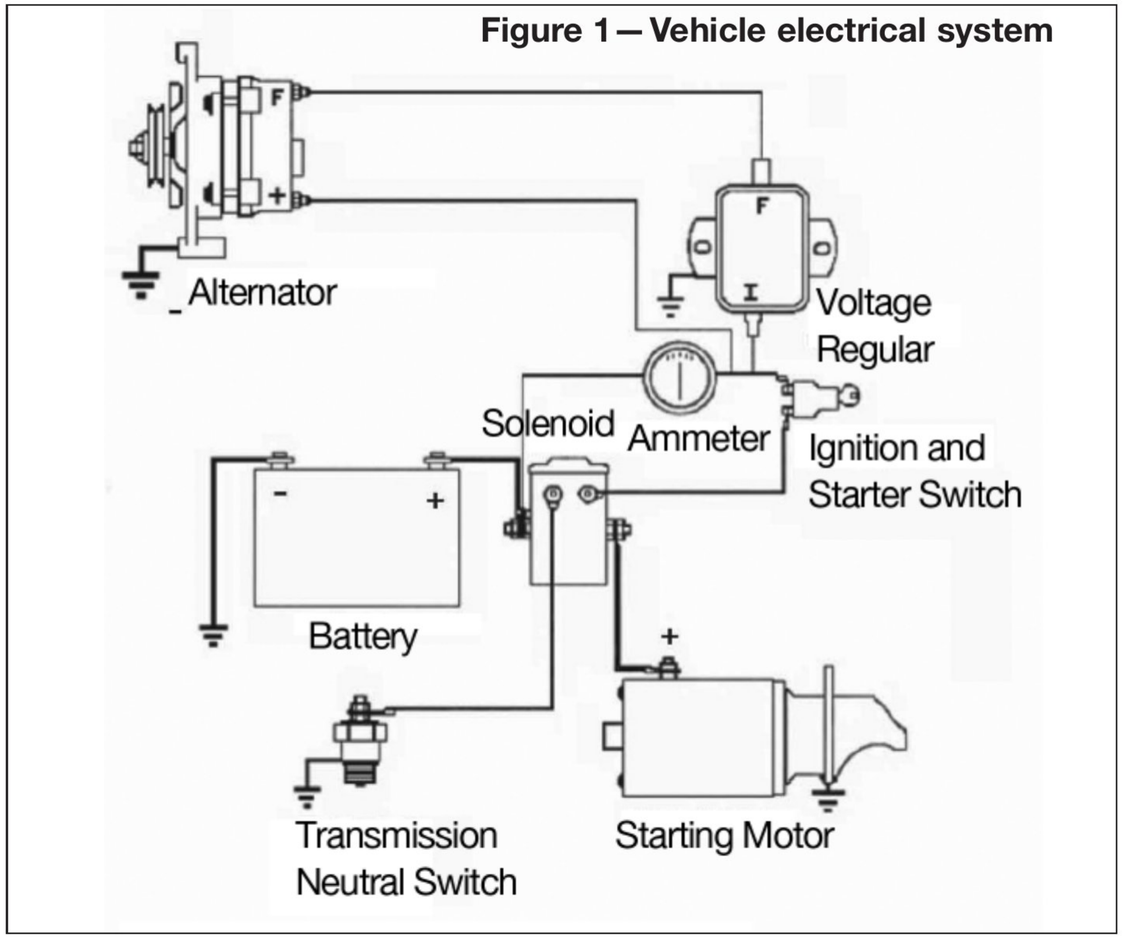

Figure 1 — Vehicle electrical system

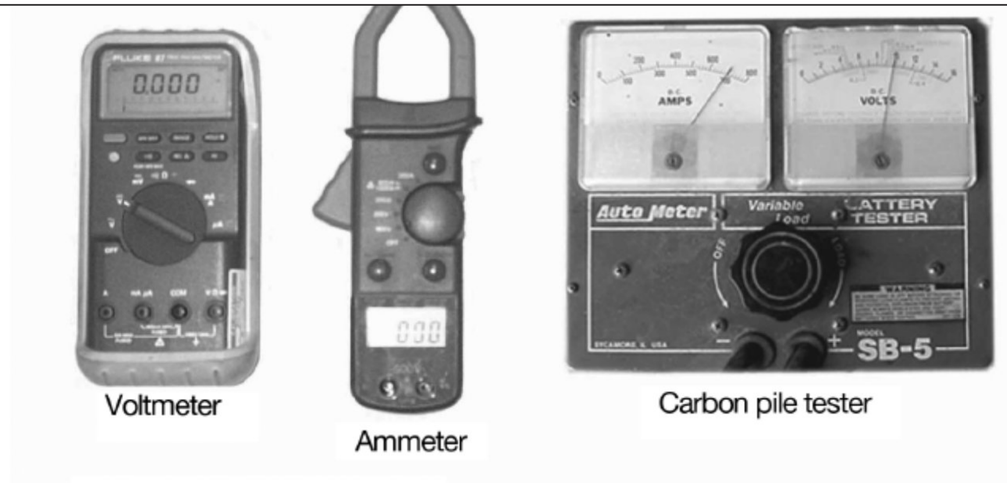

Figure 2 — Diagnostic testing equipment

ing the vehicle's driver come back to you with an uncorrected problem. Simply put, it's important to take enough time to properly diagnose and correct the real problem.

To accurately diagnose an electrical problem, you need to equip yourself with two things: the proper tools and the proper techniques. See Figure 2.

We'll provide diagrams to show how to connect the testing devices to the vehicle's electrical components. We'll provide charts to reveal what are acceptable readings on the various devices. And we'll show you how to safely perform diagnostic procedures.

The Importance of Selecting the Proper Electrical Components

In the event that your diagnostic procedures point to a faulty electrical component, you'll need to carefully select the correct replacement component.

It's not enough to simply replace an alternator or starter, for example, with an identical version of the faulty part being replaced. There are two primary reasons why this is so. First, there's a chance the faulty part's specifications never actually met the vehicle's amperage demands. Second, the vehicle's amperage needs might have increased over time.

In any case, a new component needs to support the vehicle's electrical load requirements. This is especially true with newer vehicles' highly sophisticated computer systems, which need to be closely integrated with electrical systems components.

The Importance of Following Safety Precautions

We want your vehicle to operate trouble-free. But we also want you to follow safety precautions when performing preventive maintenance and diagnostic procedures.

Whether you're working on the battery system, charging system, or starting system, make sure the vehicle's wheels are securely chocked and the vehicle is out of gear. When working on any of these three systems, always wear safety goggles or a face shield, never smoke, and do not wear jewelry or loose fitting clothing.

In the battery system section, we've listed several precautions to follow when recharging batteries. Here are some additional precautions to adhere to:

- Always follow the battery manufacturer's instructions when equipment such as a battery charger or tester is used.
- Never lean over a battery during charging, testing, or jump starting operations.
- Don't break "live" circuits at the battery's terminals, because a spark invariably occurs where a "live" circuit is broken.
- Keep batteries protected from sparks and open flames; never smoke near a battery. Batteries emit colorless hydrogen gas, which is extremely flammable; they can explode if they come in contact with sparks, flames, or ashes.
- Be certain that battery charger cable clamps or booster leads are clean and making good connections. A poor connection can cause an electrical arc, which in turn can ignite the battery's gases and cause an explosion. Sparks can occur as a result of loose cable connections, metal tools making contact between the battery terminals, and metal tools making contact between the ungrounded battery terminal and adjacent metal parts that are grounded. Don't use the top of the battery as a tool rest.
- Do not charge a battery unless you are thoroughly familiar with the step-by-step procedure for using the battery charger.
- The room in which you're charging a battery must be well-ventilated.
- Loose clothing shouldn't be worn around moving parts.
- Keep in mind radiator cooling fans can be thermostatically controlled and could turn on at any time.

An Overview of the Battery System

To begin the topic of the battery system, we've provided you with some basic information on how the battery system functions.

Each cell of a battery consists of positive plates, negative plates, and an electrolyte solution. Batteries produce electricity because of a chemical reaction between these three elements. See Figure 3.

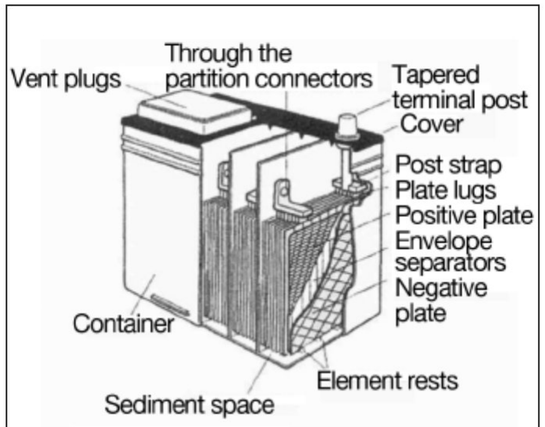

Figure 3— Battery components

In a fully-charged battery, the positive plate consists of lead peroxide (the symbol PbO_2), which is also called lead dioxide. Each molecule of PbO_2 consists of one lead atom and two oxygen atoms. The negative plate is sponge lead (the symbol Pb), which may be composed of an alloy of antimony or calcium. The electrolyte solution is sulfuric acid (the symbol H_2SO_4) diluted with water (H_2O). See Figure 4.

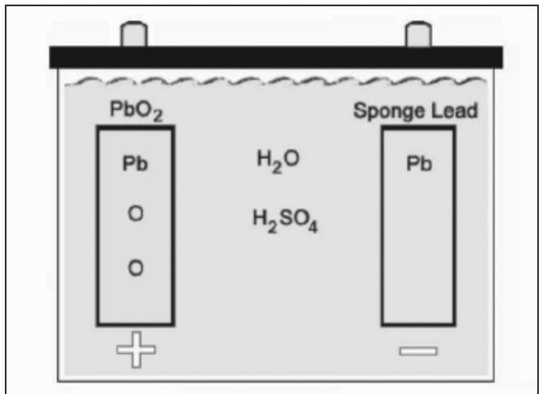

Figure 4— Fully charged battery

When an electrical load is placed on a battery, a chemical reaction takes place. The sulfate molecules in the electrolyte break off and attach themselves to the negative and positive plates. At the same time, the oxygen atoms from the lead peroxide positive plates go into the electrolyte solution to join with the hydrogen atoms, forming H^2o or water. The sulfate molecules moving to the plates and the oxygen atoms moving to the solution release energy. This is called the discharge cycle. See Figure 5.

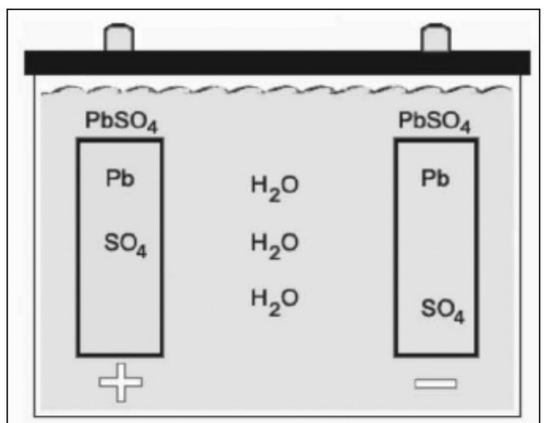

Figure 5— Fully discharged battery

When the battery is fully discharged, both plates are lead sulfate (the symbol

$PbSO_4$), and the solution is water. In the charging cycle, the sulfate molecules return to the solution, and the oxygen molecules in the water return to the positive plates.

Fully charged and fully discharged states are the extremes. Normally, a battery is partially charged or partially discharged. For example, a battery may be 25 percent discharged, meaning that 25 percent of the chemical reaction has taken place and 75 percent of the battery is in its original chemical condition.

The Primary Causes of Battery System Malfunction

Before dealing with preventive maintenance and diagnostic procedures for the battery system, we're going to cover certain environmental and usage handling factors that can cause the system to malfunction.

Excessive heat. When batteries are subjected to high temperatures, positive plates corrode quickly and battery cells dry out.

Cold weather. Because engine oil thickens in cold temperatures, it makes engines harder to crank. This places a heavier and longer-lasting drain on the battery.

Vibration. If a battery is not securely fastened to the vehicles, frame, the resulting vibration can shed the active material from the battery's plate grids.

Fast charging. Using a high charging rate to quickly charge batteries can be damaging, if the battery becomes overheated and begins gassing.

Deep cycling. Repeated deep cycling will eventually cause a battery to lose its ability to accept a charge. If battery cycling occurs use high cycle batteries.

Preventive Maintenance Procedure

There are six preventive maintenance procedures that can help preserve battery life. These six procedures are also the first steps you should take when diagnosing (i.e. troubleshooting) a problem in the vehicle's electrical system. The six preventive maintenance procedures are:

1. Check cleanliness. If the battery rack is dirty, remove the battery cables first, then remove the battery from the vehicle. Wash the battery rack with a water and baking soda solution. Flush the case with water, and dry with a towel. If necessary, clean the battery post and cable terminal with a wire brush or a special terminal cleaning tool. Wash batteries with baking soda and water.
2. Check hold-down brackets. Make sure the brackets holding the battery to the vehicle's frame are secure. If the brackets are loose, tighten to manufacturer specifications. See Figure 6.



Figure 6— Battery hold-down brackets

3. Check battery cables. Battery cable connections to terminal should be checked for corrosion and proper tightness, and cleaned and /or tightened as necessary. The cables themselves should be checked for swelling, cracking, or brittleness, cables should be replaced as necessary. See Figure 7.
4. Check battery ground cables. The battery ground cables must be securely fastened to the alternator ground. Also be sure that the points where the cables are connected to the vehicle's frame or engine block are clean and secure.
5. Check battery case. The condition of the battery case often indicates whether internal component damage or loss has occurred. Telltale signs are swelling and cracking of the case.
6. Check fluid levels (only on non-maintenance-free types of batteries). If liquid in the battery is low, add clean soft water or distilled water only. Adding a premixed electrolyte solution will make the sulfuric acid too strong and cause the plates, separators, and case to deteriorate prematurely.

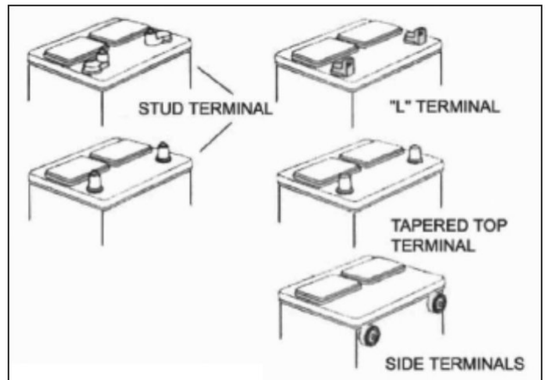

Figure 7— Battery terminal locations

Diagnostic/Troubleshooting Procedures

When trying to find the cause of a problem in a vehicle's electrical system, you should always begin with the battery.

It's critically important for each individual battery to be properly tested and fully charged. It's only then that you can move on to diagnosing problems with the charging or starting systems. A battery not fully charged will cause all other electrical systems tests to be inaccurate.

Remember to always disconnect all battery ground cables, at the batteries, before replacing or servicing any electrical equipment. After removing battery ground cables verify no voltage is present at alternator output terminals.

Beyond the visual inspection procedures mentioned earlier, there are three simple steps to testing a battery: removal of the surface charge, determination of the state of charge, and load testing.

Remove the battery's surface charge. Electrical charges on the surface of the battery's positive plates cause a falsely high voltmeter reading. Removal of this so-called "surface charge" is required on batteries that have been charged by an alternator or a battery charger within 48 hours. Batteries on trucks that have not been run or charged on a charger within 48 hours will not have significant surface charge.



Figure 8— Carbon pile load tester.

To remove the surface charge, you'll need to slightly discharge the batteries. This can be done by using a carbon pile load tester to load each battery to one quarter of its cold cranking amps rating for 15 seconds, see Figure 8. Fifteen seconds is long enough to dissipate the surface charge from the plates.

The surface charge can be removed by

simply turning on the vehicle's lights—without starting the engine—for two to three minutes per battery.

Test the battery's state of charge. The second step in battery testing involves testing each individual battery's state of charge. Connect a voltmeter across each battery and record the readings. Compare the readings to the Figure 9 chart to determine the percentage of charge. If the battery is at 75 percent or higher, you can proceed to the third step—the load test. If the battery is below 75 percent, recharge it. Remove the surface charge, and then test it again to determine the state of charge. If after recharging the battery, it is still below 75 percent charged, the battery may require further charging or it may be defective.

12.60 V	100%
12.45 V	75%
12.30 V	50%
12.15 V	25%

Figure 9—Percent of charge table

Carbon pile load testing. The third step in battery testing is to load test the battery. Follow the carbon pile load tester manufacturer's instructions when connecting the tester and ammeter across the battery. Determine the battery's cold cranking amp rating, or CCA. Divide the CCA rating by two to determine the load. Load the battery for 15 seconds, adjusting the carbon pile to maintain the proper load. Do not load the battery any longer than 15 seconds, as this may cause damage to the carbon pile. At the end of the 15-second load, read the voltmeter and turn off the carbon pile.

The table in Figure 10 is used as a guideline for the minimum acceptable load test results. Notice that as the electrolyte temperature declines, so does the minimum voltage. This is due to the effect of temperature on most chemical reactions. The battery reaction is slower as the electrolyte becomes colder.

Batteries that pass the load test may be put back into service. Fully charged batteries that fail the load test have lost capacity or the ability to provide electrical current for cranking.

Electrolyte Temp (F)	Voltage
70° or above	9.6
60°	9.5
50°	9.4
40°	9.3
30°	9.1
20°	8.9
10°	8.7
0°	8.5

Figure 10 — Minimum acceptable load test results (when load is applied 1/2 the CCA rating of the battery.

Battery Charging

When recharging batteries, please follow these important safety precautions:

1. Leave battery charger unplugged until its cables are connected to the battery.
2. Charge each battery separately.
3. Use the proper charger.
4. Charge batteries in well ventilated area.
5. Never smoke while charging batteries.
6. Use protective eye wear.
7. Do not wear watches or jewelry.

Battery Replacement

If you perform regular preventive maintenance on batteries, and always properly charge and test batteries, you can avoid or reduce the need for costly replacements.

However, if your diagnostic procedures point to a faulty battery, you'll need to carefully select a new battery. The new battery's "cold cranking amp" rating must support the vehicle's intended application, or load and duty cycle.

See Part II in the November issue.

ERE