Leece-Neville heavy-duty electrical systems maintenance and diagnosis
Part III

An Overview of the Starting System

The starting system converts electrical energy from the batteries into mechanical energy to turn the engine over. A malfunction within the starting system will make it difficult to get the engine running.

In order to properly service the starting system, you need to understand how it operates. The starting system has five main components: the ignition switch or start button, a neutral safety switch (an option on some vehicles), the starter solenoid, the starter motor, and the batteries.

When the key is turned in the ignition switch to the start position, or the start button is pushed, electricity flows from the batteries to the starter solenoid.

Some vehicles are equipped with a neutral safety switch. If the vehicle is in gear when the key is turned, the neutral safety switch blocks the signal to the batteries, so the engine doesn't start cranking. Otherwise, the vehicle could jump forward or backward when the key is turned.

The starter solenoid is an electromagnetic switch mounted on the starter motor. When coils inside the solenoid are energized by electricity, they create a magnetic field which attracts and pulls a plunger. Attached to one end of this plunger is a shift lever. The lever is connected to the drive pinion and clutch assembly of the starter motor.

The starter motor is a small but powerful electric motor that delivers a high degree of power for a short period of time. When the starter motor is energized it engages the flywheel ring gear and produces torque, which turns the flywheel and cranks the engine.

When the driver releases the ignition switch from the start position to the run position, the solenoid is deactivated. Its internal return springs cause the drive pinion to be pulled out of mesh with the flywheel, and the starter motor stops.

The Primary Causes of Starting System Malfunction

Before discussing the preventive maintenance and diagnostic procedures for the starting system, we're going to cover certain environmental and product application factors that can cause the starting system to malfunction.

1. Battery charge. A battery having a low/poor state of charge will place abnormal stresses on the starting system. When measuring battery voltage, make sure voltage is 12.4 V or greater.
2. Excessive heat. A starter motor can become damaged if it operates too long at high temperatures. Excessive heat is generally due to continuous engagement of the starter. Damage to starting system components can occur when the starter motor is cranked for long periods (often due to cold weather starts, improperly tuned engine, etc.). Starter should operate for 30 seconds maximum then let to cool down for two minutes.
3. Excessive vibration. If starting system components are poorly or loosely mounted to the vehicle's engine, the resulting vibration can damage sensitive internal components.
4. Corrosion, dirt, and dust. Starting system components operate less efficiently when corrosion forms or dirt particles build up around wire and cable connection points. Corroded and dirty connection points impair the flow of electrical current.
5. Improper use of starting fluid. Overuse and/or extended use of starting fluid places abnormal stresses on starting system components.

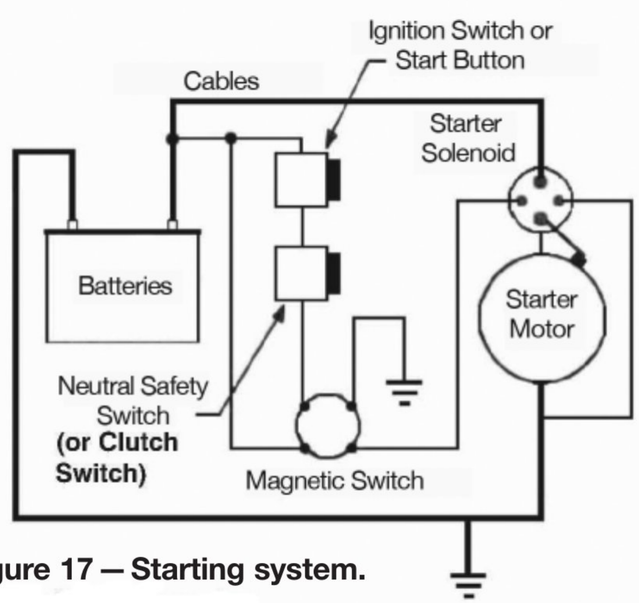

Figure 17 — Starting system.

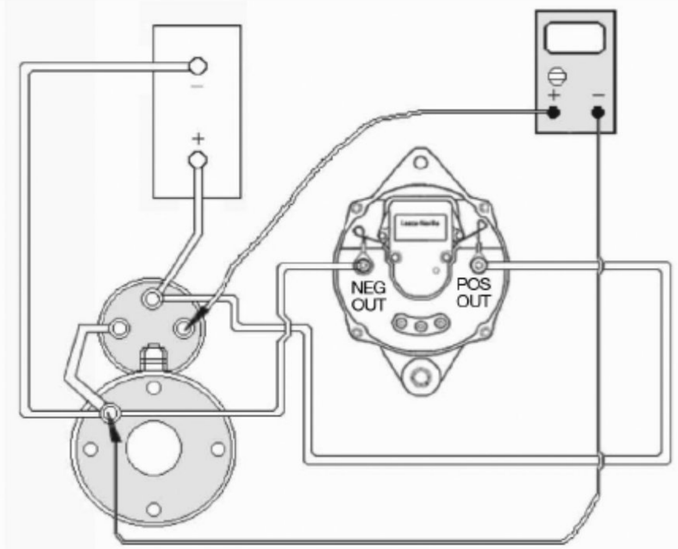

Figure 18 — Ignition/run switch test.

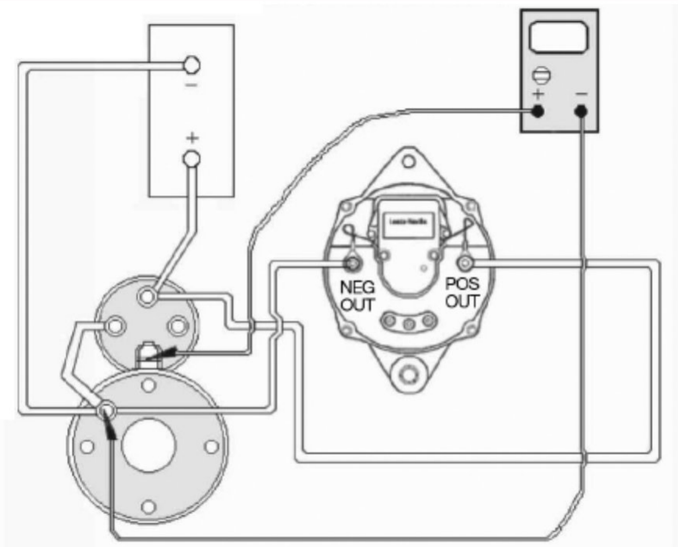

Figure 19 — Solenoid test.

6. Defective solenoid. If the starter fails to engage or fails to stay engaged, the pull-in or hold-in coil may be defective, or the wiring to the solenoid is bad. You need to check the wiring to the solenoid. If the wiring is OK then the coil is defective and you will have to replace the solenoid.

Preventive Maintenance Procedures

The object of preventive maintenance is to identify and correct potential problems before they occur.

There are two preventive maintenance procedures that can greatly enhance the efficiency of the starting system's functions. These two procedures also represent the initial steps you should take when fully diagnosing (i.e. troubleshooting) a problem in the vehicle's starting system.

Engine operating condition. Keeping the engine in good running condition is essential to ensure efficient operation of the starting system. Simply put, an engine in poor condition is harder to start, and this shortens the life of the starter motor. An engine that starts easily results in fewer turns of the starter motor, and therefore, a longer life for the starter.

Wires and cables. For any type of vehicle electrical system, it's important to keep all connection points clean. Road dirt and grease create resistance that interferes with electrical current flow. In order to get the necessary power from a unit the size of a starter motor, there must be little or no resistance between the batteries and the starter motor. In the same vein, you need to make sure that wires and cables are clean, properly tightened, and of the proper size. Any loss of current due to poor connections will reduce power of the starter motor. Clean all connections on a periodic basis.

Employing the preventive maintenance steps we've outlined will be extremely beneficial to the starting system. There's also another way to save yourself a lot of time and wrench work: visually inspecting the starting system's components for signs of damage.

Diagnostic/Troubleshooting Procedures

Timely preventive maintenance of the starting system should keep it running smoothly. However, if the starter motor is cranking slowly, or not at all, it's time to diagnose (i.e. troubleshoot) the starting system. *In performing any diagnostic procedure, refer to the safety information section in the October issue.*

Any discussion about the electrical system must begin with the batteries. Before you begin analyzing the starting system, you must be sure the batteries have been properly tested and are at least 75 percent charged. Otherwise, any electrical tests you conduct on the starting system will be inaccurate. (Please refer to the October issue for procedures on testing and charging batteries.)

You must also be aware that if the batteries aren't being recharged, there may be a problem in the charging system, which will lead to starting system problems. (If that's the case, refer to the November issue for procedures on testing and troubleshooting the charging system). Once you have verified that the batteries and charging system are working, you can begin testing the starting system.

When troubleshooting, you always want to strive for the most easily obtainable solution and progress toward the most difficult problems to address. *And remember, when replacing electrical equipment, always disconnect all battery ground cables at the batteries.*

Ignition/run switch test. You should begin by determining whether the problem is in the ignition switch, push button, pilot relay and associated wiring or if it's in the solenoid and starter motor.

We'll begin with the ignition switch circuit. Connect a voltmeter between the ignition switch terminal of the starter solenoid and ground (see Figure 18.) Have someone attempt to crank the engine and record the voltage. You'll get either no voltage, low voltage, or normal voltage, with slow cranking or no cranking at all.

First, troubleshoot the switch circuit. You can test it by connecting a remote start switch between the battery positive and the switch terminal on the starter solenoid. When you close the switch, the starter should engage and start the engine. Again, record the voltage while cranking and compare it to your first reading. A difference of less than one volt is not enough to indicate a problem. If there is a differ-

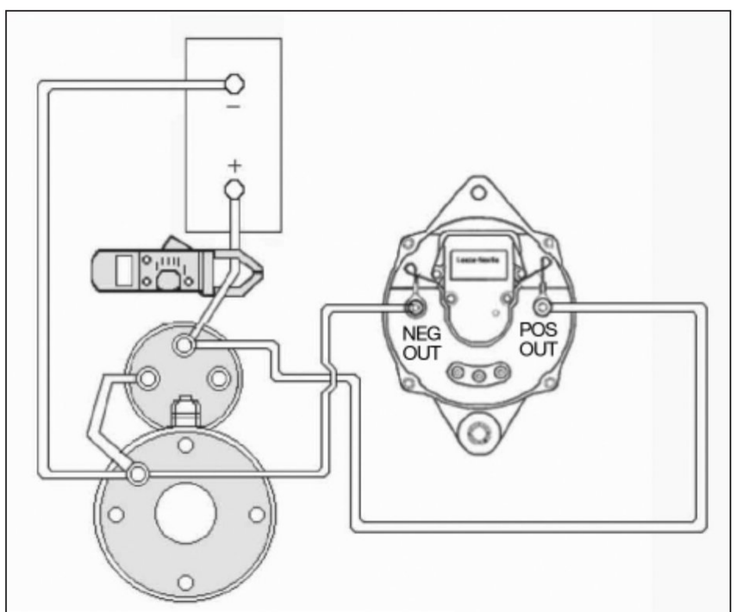

Figure 20— Starter motor test, positive cable.

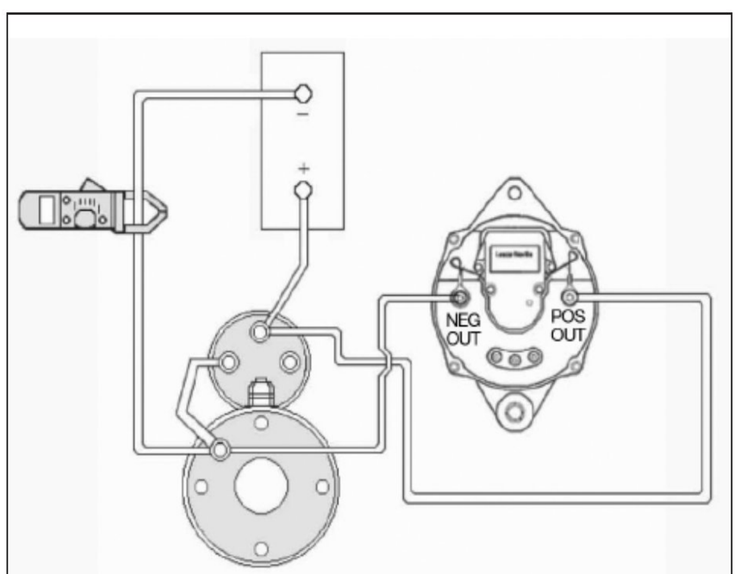

Figure 21— Starter motor test, ground (negative) cable.

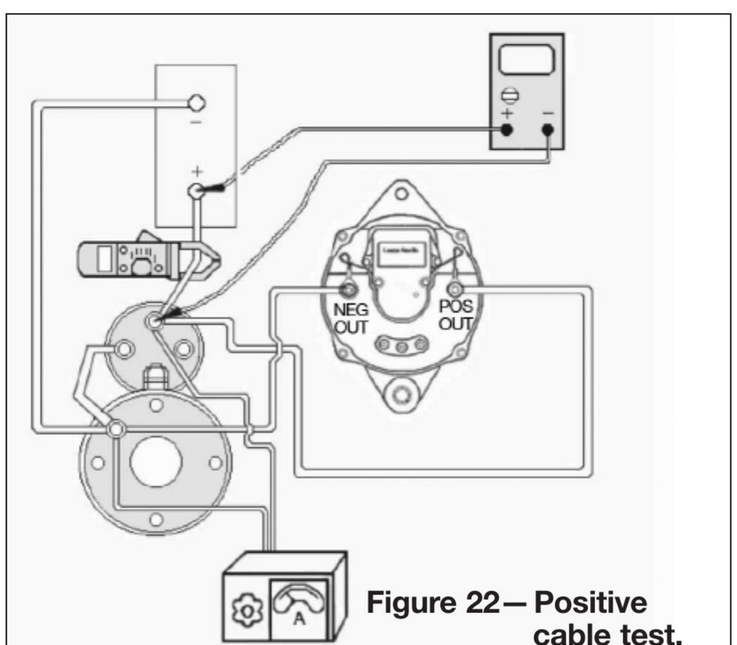

Figure 22— Positive cable test.

ence of more than one volt, however, then there is a problem in the switch circuit.

Use the voltmeter to check each connection, moving backward through the switch circuit. If your first test of the ignition switch had shown low voltage, that may indicate a shorted starter motor, which would have to repaired or replaced.

If the voltage in your first test was normal, but there was slow cranking or no cranking at all, that would indicate a problem related to the batteries, battery cables, or a damaged starter.

Solenoid test. Although the reasons for low voltage or normal voltage with slow cranking are different, the procedures for locating the problem area are the same. If the solenoid clicks but the motor won't turn, it means current is flowing through the solenoid coils but not through the main contacts.

Connect the voltmeter to the motor terminal of the solenoid per Figure 19. If there's no voltage from the motor terminal to ground (when the solenoid is activated), that indicates the disc isn't making contact with the terminals. The solution is to repair or replace the solenoid.

Starter motor test. If voltage is present at the solenoid motor terminal, then the problem is the starter motor or its cabling. If your original test of the ignition (or run) switch indicated normal voltage, but slow or no cranking, your next step is to check the motor system and its connections.

If the drive pinion keeps shifting out of mesh with the flywheel, then check for a broken or a loose external ground wire on the solenoid. Replace a broken wire or reattach a loose one.

Measure the amp draw with ammeter in either the positive, see Figure 20, or ground cable, see Figure 21, of the starter motor while pressing the start switch. If the amp draw is excessive, according to the manufacturer's specifications, then the starter motor is faulty. Slow cranking or high current draw can also indicate that bushings are worn because of an off-center armature. Worn bushings and/or an off-center armature cause poling and throw off the alignment of the magnetic fields. But, before you replace the starter, check the condition of the engine to make sure it turns freely. An engine in poor condition could cause the starter to work harder or longer. In other words, the starter may not be the problem. It may be damaged by the engine's poor condition.

Voltage drop test. Sluggish cranking may be caused by a very small amount of extra resistance in the circuit. This may come from dirty connections or bad or broken cables. With the voltage drop test, you first must check the starter's positive terminals, then the negative terminals.

Positive cable test. Connect voltmeter, ammeter, and carbon pile tester per Figure 22. Adjust a carbon pile load tester until ammeter reads 500 amps through to the meter. Note the voltage reading. On 12-volt system, voltage drop should not exceed .4 volts. On a 24-volt system, voltage drop should not exceed 1 volt. Turn off carbon pile tester when test is complete.

Negative cable test. Connect voltmeter, ammeter, and carbon pile load tester per Figure 23. Adjust carbon pile load tester until ammeter reads 500 amps. Note the voltage reading. On 12-volt system, voltage drop should not exceed .4 volts. On a 24-volt system, voltage drop should not exceed 1 volt. Turn off carbon pile tester when test is complete.

Solenoid voltage drop test. The final check takes place at the solenoid terminal. And for this test, you must crank the engine. Disconnect the carbon pile load tester, voltmeter (if applicable), and ammeter so that none of the testing equipment will be damaged by the test procedure. An autoranging digital voltmeter is useful in this case, as full battery voltage appears across the solenoid terminals before they close. Connect voltmeter per Figure 24. Crank the engine and note the voltage reading. No more than two-tenths voltage drop should exist between the solenoid contacts.

The voltage readings from the three tests (positive and negative cable tests and solenoid voltage drop test) must not add up to more than one volt for a 12-volt system or 2.5 volts for a 24-volt system.

If the voltage drop is more than allowable, check the cables and connections. To be sure the problem is actually a bad cable, do the voltage drop test over again using a jumper cable to parallel the original cable. If the voltage drop is acceptable, then you know the cable is the problem.

One final note: There are many variations of grounding the starter circuit. Some vehicles have a ground cable for the battery and another ground cable for the starter motor. Both attach to the frame. When doing a voltage drop test, you must check all cables regardless of the circuit.

Starter Replacement

In the event that all of the diagnostic/troubleshooting procedures point to a faulty starter, you'll need to replace your unit with a new starter.

See Appendix A, B, and C at the end of this manual (January issue) for the Alternator Sizing Worksheet, Troubleshooting Flowchart, and Alternator Test Procedure Flowchart.

See Part IV in the January issue.

ERE

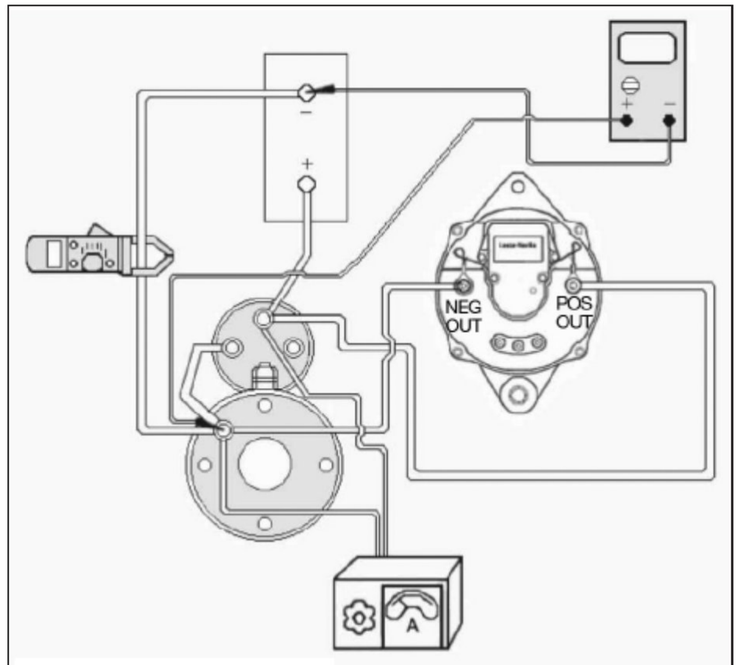

Figure 23— Negative cable test.

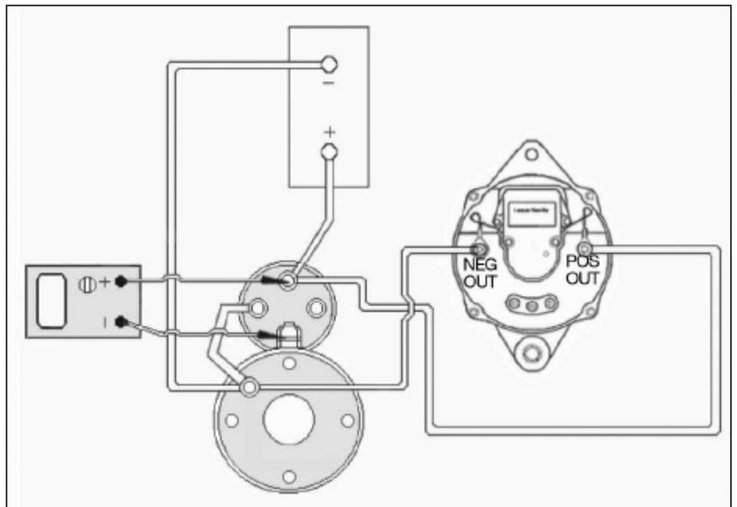

Figure 24— Solenoid voltage drop test.