Lucas M50 starters with double-contact solenoids
Part II

COLUMN BY NATHAN UNGER
WITH WES GRUENINGER SR.

Understanding the starter

Are you sitting down? Here goes: First we start with a wiring diagram (see Figure 7).

Notice that all the field coils are in parallel to each other (4 shunt coils) except for the one which is connected to an independent set of contacts (M1). Refer again to Figure 2 and Figure 3, in the December issue, page 8.

Installed on the machine, the power on B+ of the starter is present all the time. Power is applied to the S terminal via the start button/ignition switch, and current flows through both solenoid coils—a total of 92A on one I tested. The hold-in coil is connected directly to ground. It is active the whole time the S circuit is powered up. The pull-in coil is grounded through the fields and the armature at the "motor" stud of the 3 coils (This is that second set I discussed earlier, M3 in Figure 3).

As soon as the M3 contacts are closed, the pull-in coil will have 12V on both ends and no current will flow through it (see Figure 10). This prevents the pull-in coil from overheating and also lowers the current flowing through the ignition switch and other components of the S circuit, down to about 16A. The pull-in coil

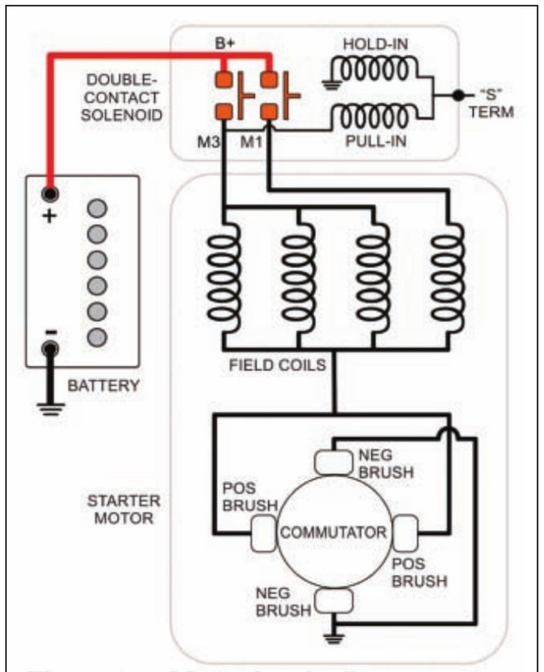

Figure 7—M50 circuit diagram.

does most of the work of pulling the plunger in and is wound with thicker wire than the hold-in coil. Even though it has the same number of turns as the hold-in coil, it draws a lot more current—about 76A by itself in my test unit. It works together with the hold-in coil and actually contributes to the soft start effort to clear tooth abutment. I've even seen a number of starters by other manufacturers where the soft start feature depends on the pull in coil current.

Now let's look at this in slow motion:

Step 1: As the solenoid plunger starts to pull in, the drive starts to engage the ring gear. Almost immediately the M1 contacts close. This means that current flows through the single shunt coil. Together with the pull in coil current through M3, we now have enough current to make the armature rotate slowly. If it should happen that we get tooth abutment at first (see Figure 8), then the linkage will not allow the M3 contacts to close yet.

(Exception: if your pinion clearance is excessive, it may allow the M3 contacts to close prematurely. That can cause milling of the gears.) But, during the time that the plunger is moving, the S circuit is carrying 92A. All this current is coming from the ignition switch! As soon as the M3 contacts close, that current drops to 16A.

Step 2: As the armature rotates slowly, it clears the abutment position and engages the ring gear fully (see Figure 9). The linkage then allows the M3 contacts to close, giving full power to the remaining three field coils, allowing the starter to properly crank the engine.

Step 3: In that small fraction of a second when the farmer quits cranking the engine, but before the solenoid contacts have time to release, there will be a current path from the power still available at the M3 stud, up to the now-released S terminal, then through the hold-in coil to ground (see Figure 10).

Two things happen in that fraction of a second:

1. The current in the pull-in coil is reversed in direction, reversing its magnetic pull.
2. Current flows in series through the pull-in coil and the hold-in coil. Because of this, they both have the same amount of current—on my unit, about 13A. Remember Kirchhoff?* Current in a series circuit is the same at all points.

Since both coils have the same number of turns and the same amount of current, but opposite magnetic polarity, the net magnetic pull is zero. This allows the various springs in the linkage to open the contacts and return the plunger and the drive.

As an aside, notice that the pull-in coil is connected to M3, not to the motor stud of the single coil (M1). This means that if the M3 contacts don't close, you will have high current continuously, instead of just momentarily. According to my test unit, that's about 92A through the S switch the whole time the farmer is tormenting his starter. This is one reason the solenoid coils get burned. Could this also burn out his ignition switch contacts? I've heard of that happening.

In some machines, they have an extra relay to protect the ignition switch and also improve the available voltage to the solenoid. This relay can be retrofitted as well. See the article on the ERA website in the Technical Article Library called "Solving Problems Using Relays—or—Four Handy Uses for Bosch Relays" by Wes Grueninger and Bob Thomas—refer to Problem Fix no.1.

To reiterate—the single burned field coil is a result of the second set of contacts not closing. That might be due to incorrect pinion clearance or worn/dirty contacts.

Understanding contact voltage drop

Contact voltage drop is a measure of how well the contacts conduct electricity when they close.

This is affected by the actual contact area, the contact pressure, and the composition/purity of the contacts, among other things.

On a free run test, I usually see healthy

contact voltages under 0.1V. When torque-loading the starter, around 0.3V is acceptable because of the higher current.

Verifying the contact closure sequence

If we could block the drive back and yet still free-spin the starter, then we could determine if the second set of contacts stays open during abutment. I use a piece of 3/4-inch plastic pipe that I cut to a length of 1/2-inch, which is just a little more than the width of engagement (see Figure 11). Cut a slice of 1/3 out of it, so it forms a "C" shape. Snap this over the armature shaft in front of the drive. This will simulate the abutment condition.

Three contact voltage drop tests with the "C"-ring tool in place:

1. Put a voltmeter across the B+ and M3 terminals to measure the contact voltage drop. Apply 12V to the B+ and S terminal and do a free-run test. You might see somewhere around 1.5V from B+ to M3. This actually indicates that the M3 contacts are open. (Remember there are parallel circuits involved.)
2. Now put your voltmeter between B+ and M1 and free run the starter again. The meter should read less than 0.1 volt, indicating that the M1 contact is closed and in good condition.
3. Lastly, remove the "C"-ring tool, put your voltmeter back on B+ to M3 again, and free run the starter. This time the starter will accelerate a bit faster, and the voltage should be less than 0.1 volts, indicating that now the M3 contacts have closed and are in good condition.

There are other tests you can do to verify:

- the exact starter drive position at which the M1 contacts close
- the exact starter drive position at which the M3 contacts close
- the starter will not run on after the key switch is released
- that you won't get a "click, no start"
- the amount of reserve "burnoff" for each set of contacts.

But since this article is already too long, I will save that stuff for some other time.

Things to avoid

I've seen an M50 starter core come in with a custom jumper strap someone had put across the M1 and M3 solenoid terminals to reduce certain problems, while still using the older 17-degree spline armature (see Figure 12). The drive was badly milled as a result of a tooth abutment/grinding problem. If they had used a 32-degree spline armature instead, it probably would have been fine. This is what the newer M127 starters use, together with the single pair of contacts in the solenoid. The sharper spline angle gives the drive more twist as it is thrusting forward, helping clear the tooth abutment scenario, should it occur. In my opinion, the M127 design with the single contact solenoid and 32-degree splines will last longer under the low-voltage conditions so common on older equipment.

Also, be careful of some aftermarket "new" starters. I have seen some that have the single contact solenoid, but still use the earlier armature design with 17-degree splines. These will be more prone to the tooth abutment/grinding problem.

Conclusion

When you see a single burned field coil on one of these units, check for fouled B+ to M3 contacts or incorrect pinion clearance.

There are more schemes for soft start out there, but studying the M50 with double contacts will help you with some basics, so that you can become the go-to guy for this kind of stuff.

*A detailed explanation of Kirchhoff's Rules can be found at: http://electron9.phys.utk.edu/phys136d/modules/m6/kirchhoff.htm

Courtesy of the Electrical Rebuilder's Association. This Technical Document (SS201111A) along with other technical and membership information, may be accessed at electricalrebuilders.org.

ERE

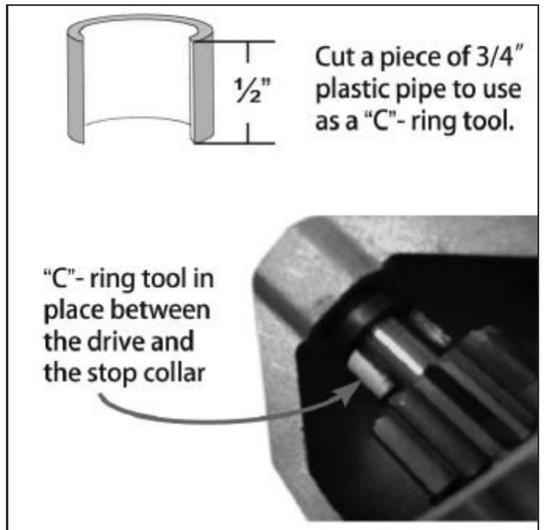

Figure 11—Using a "C"-ring tool.



Figure 12—M50 and M127 armatures.

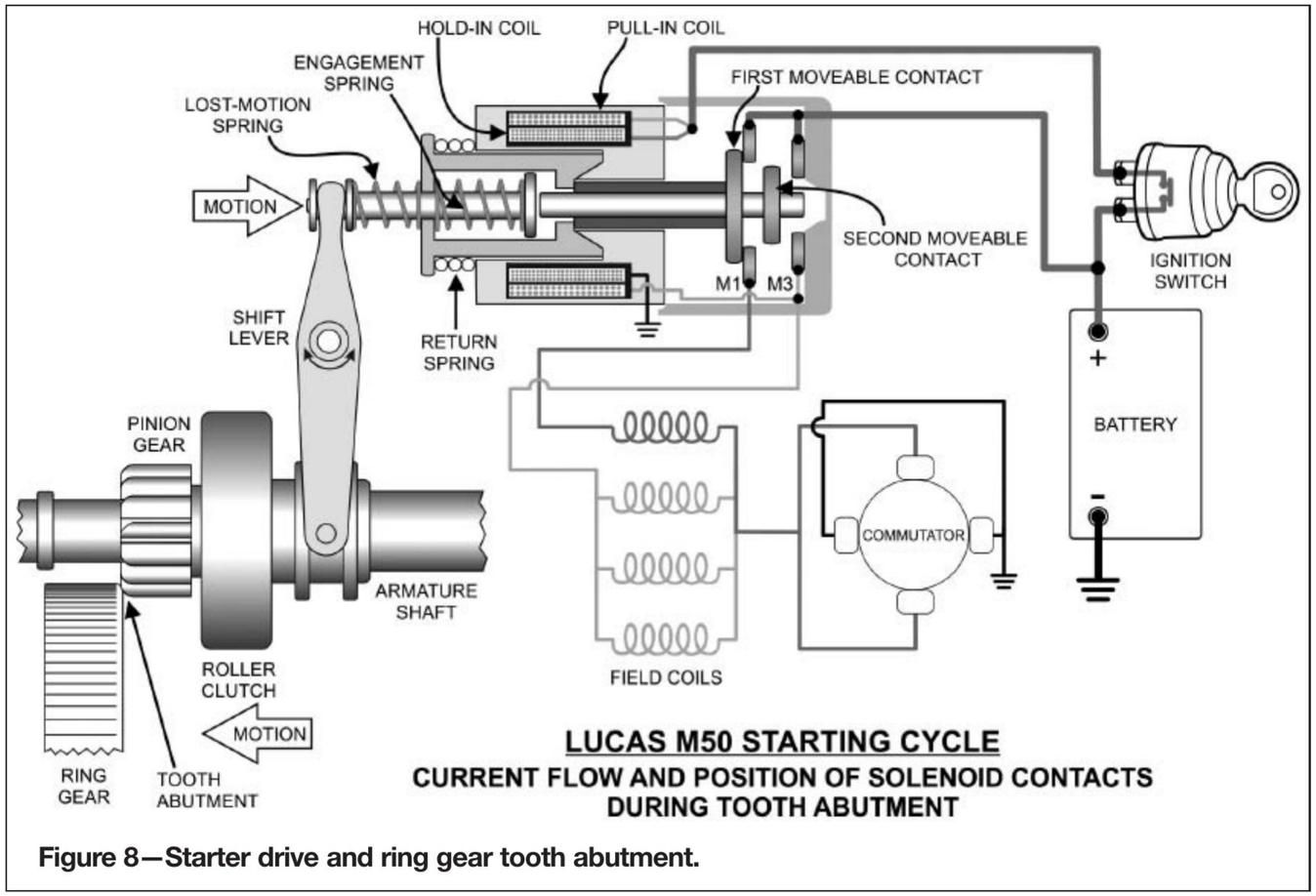

Figure 8—Starter drive and ring gear tooth abutment.

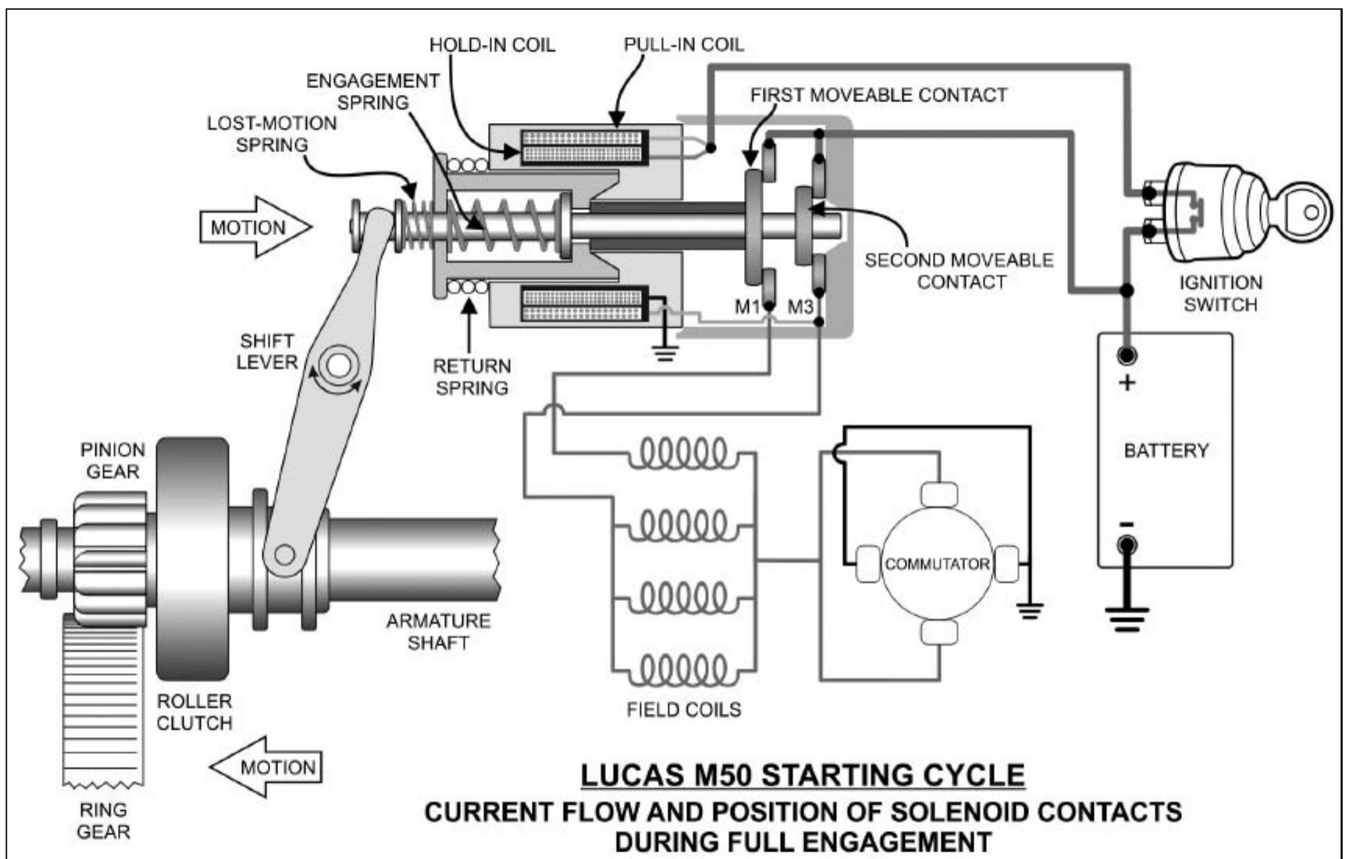

Figure 9—Starter drive is fully engaged.

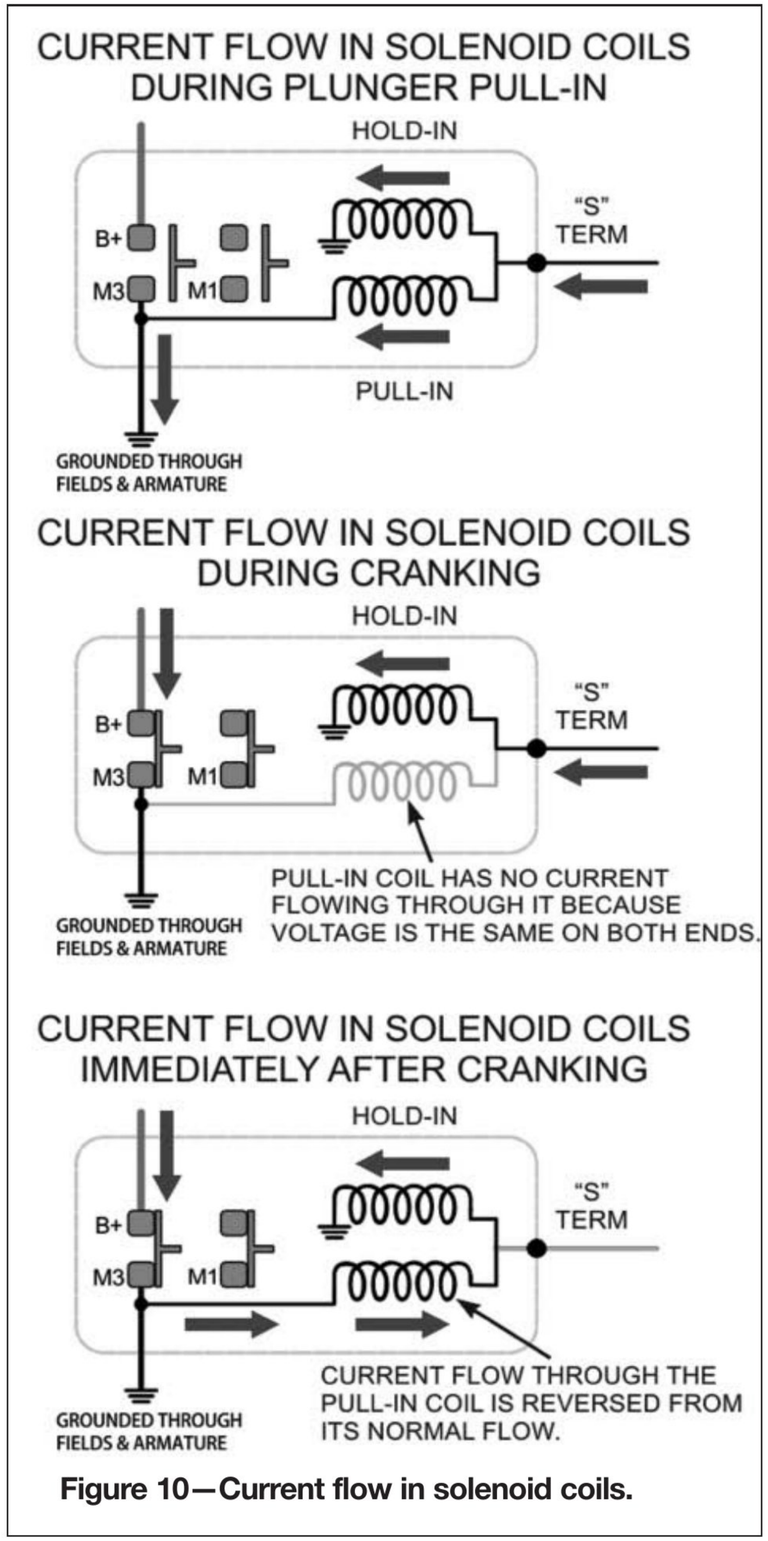

Figure 10—Current flow in solenoid coils.