Testing rotors:
Does polarity matter?

COLUMN BY WES GRUENINGER SR.
AND BOB THOMAS

Ask any rebuilder if polarity matters when testing rotor amperage draw, and 99.9 percent will say, "No"—and they would be correct. As far as amperage draw is concerned, it doesn't matter which tester lead goes where. But if you happen to be testing a Mando rotor for a particular marine alternator (Figure 1), it will matter quite a bit once you reassemble the unit and try to bench test it. That is when testing the rotor using the wrong polarity will most likely prevent the alternator from turning on. If you "guess" when testing this rotor, you have a 50 percent chance of having a problem. This same scenario could also apply to just about any other alternator that uses a diode trio if the voltage coming into the exciter terminal (D+ or L) is too low. Read further if you want to know why.

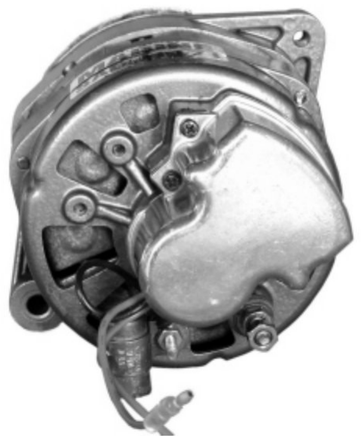

Figure 1—Mando marine alternator.

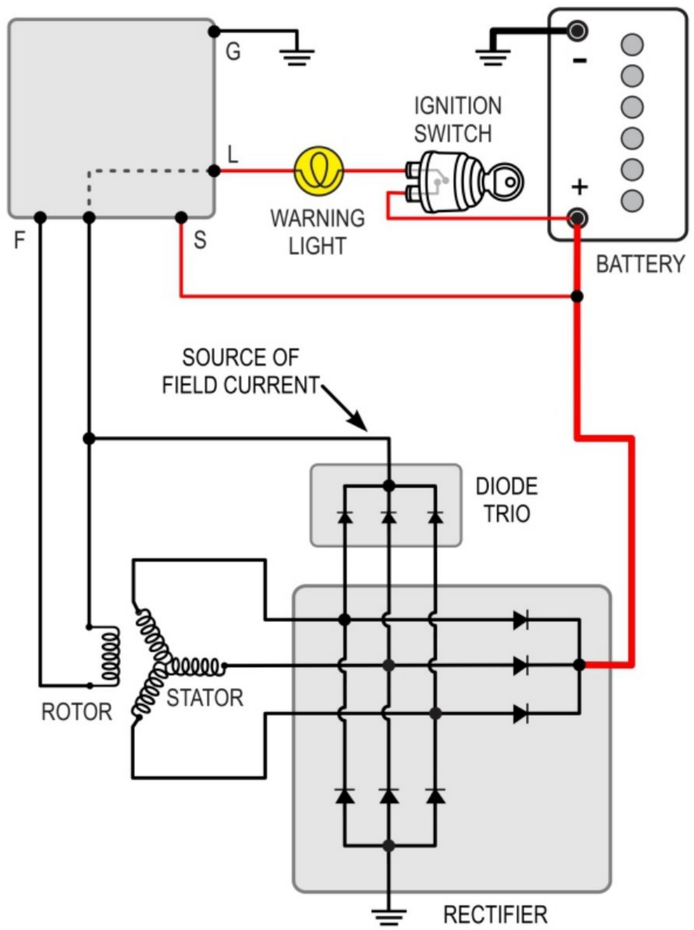

Figure 2—Typical diode-trio circuit.

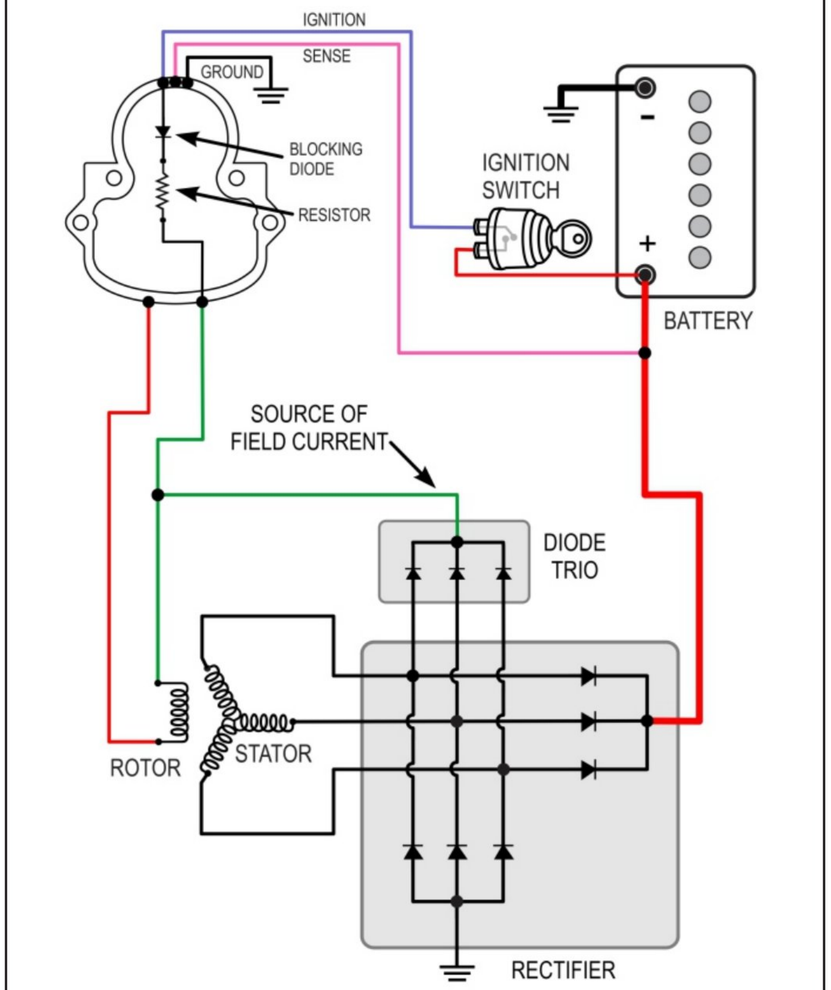

Figure 3—Mando circuit.

In your typical internally regulated A-circuit alternator (Figure 2), the source of the field current is a diode trio, and the alternator is turned on by exciting the trio. By that we mean voltage is applied to the trio brush from a source outside the alternator—like an ignition-fed charge indicator lamp. The voltage coming through the lamp is enough to create a weak magnetic field in the rotor, which, as it spins, generates a small current flow in the stator windings. Once the voltage in the stator windings exceeds the .7 volts required to pass current through the trio diodes, the trio begins to supply additional current to the positive brush. When this happens, voltage builds on itself until the regulator set-point is reached. Then the output of the diode trio supplies all rotor field current. Now the regulator can begin working by switching the ground side of the rotor field to control output voltage. At this point the voltage from the trio is the same as the output voltage. This essentially removes the ground source from the charge lamp, and the lamp should go out.

This type of diode-trio circuit worked well for General Motors for nearly two decades, because the charge lamp bulb they used was of relatively low resistance. This meant that the voltage exciting the trio was more than sufficient to start the alternator charging. However, all trio-activated alternator applications do not

have a low resistance bulb. Some of them have a high resistance bulb, and others have no bulb at all. In fact, the alternator circuit used with the Mando marine alternator mentioned above has no bulb. Instead, as you can see in Figure 3, it is excited directly off of the ignition switch and has a "blocking" diode and a resistor in series (inside the regulator) between the exciter wire and the trio connection. The blocking diode prevents the trio from backfeeding the ignition system, and the resistor prevents the ignition circuit from supplying field current if the trio fails. The combined resistance of the blocking diode and the resistor is over a megohm—that is over one million ohms. It is obvious that not much voltage or current is going to get through to excite the rotor field.

If this Mando rotor is tested in reverse polarity, it will hold reverse residual magnetism as a result of the test. After the alternator is reassembled and tested, it may not turn on and charge. Why? Because the current passing though the exciter-circuit to the trio is minimal, and in most cases it will not create sufficient magnetic strength to overcome the reverse residual magnetism already in the rotor.

In this situation, you can correctly polarize the rotor by removing the regulator, jumping B+ to the trio brush and B- to the rotor field brush (see connections in Figure 4).

As an additional note, you may have this same problem with any alternator that uses a trio, if the voltage from the charge lamp is too low. Even 10SI alternators can have this problem after the rotor has been tested backwards—particularly with a rotor whose poles have high iron content. With a 10SI alternator, it is easy enough to momentarily "flash" B+ to the L terminal to repolarize the rotor. Self-excited 10SI alternators that are not AC-activated and still use a diode trio may have this same problem. Other alternators, like the Mando, may take up more of your time if the rotor is tested backwards. Taking a few seconds to ensure that you are testing the rotor using the correct polarity may save you an hour or more of troubleshooting.

If you are using an AC-activated regulator, you will not have this problem. It can occur only when a diode trio is used.

Courtesy of the Electrical Rebuilder's Association. This Technical Document (CS-201202A) along with other technical and membership information, may be accessed at electricalrebuilders.org.

ERE

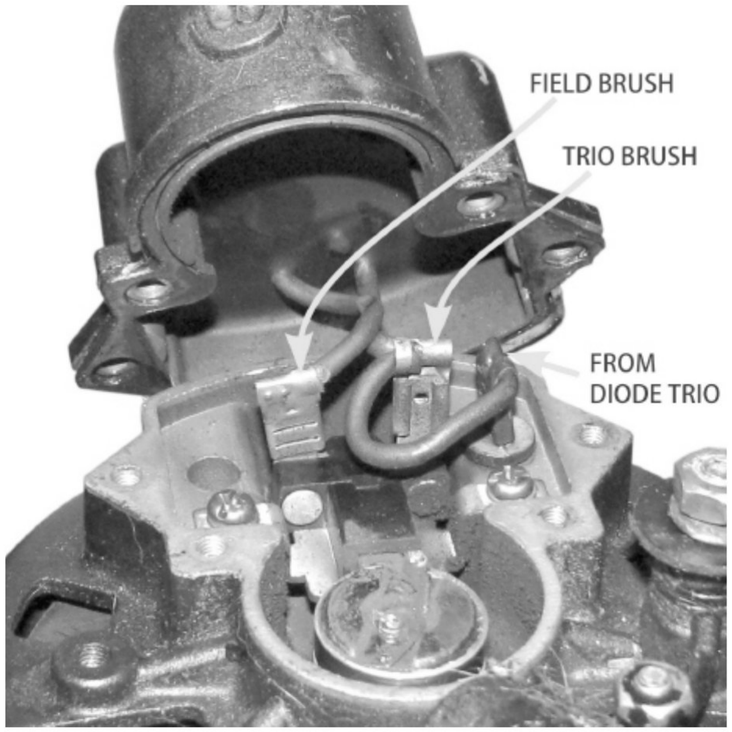

Figure 4—Mando connections.

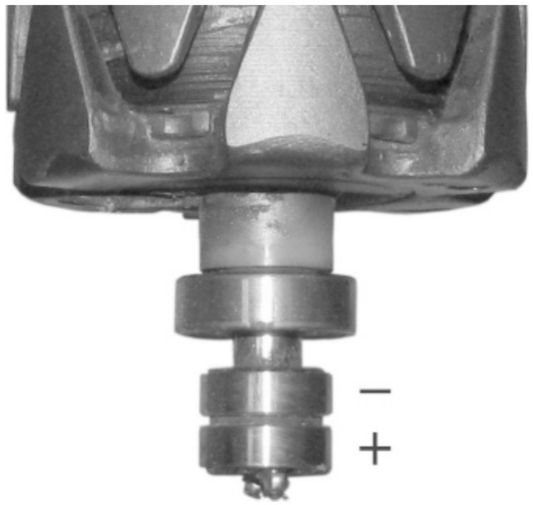

Figure 5—Mando rotor testing polarity.

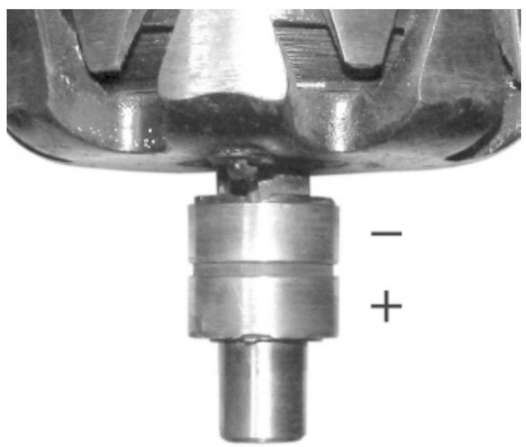

Figure 6—10SI rotor testing polarity.