Take a new look at diode leakage

COLUMN BY WES GRUENINGER SR. AND BOB THOMAS

Leaking diodes and the trouble they can cause have been around for as long as we've had alternators. Eventually, leaking diodes result in the failure of the rectifier. That leakage, normally measured in milliamps, is a sign that the diode chip has been stressed by overheating and voltage spikes. But with the introduction of regulators that utilize a stator-phase connection as part of their turn-on function, the seriousness of diode leakage takes us into new territory. When leakage is too high, it can keep a stator activated regulator turned on after engine shutdown, because this type of regulator is always looking for stator voltage.

Rebuilders who have been using AC activated or stator activated regulators in self-exciting alternators may have encountered leakage problems without knowing it. These problems have been seen in GM applications which use Remote Voltage Control or RVC (Figure 1). In fact, any regulator with a connection to the stator can stay turned on after the engine has been shut down if the rectifier is leaking enough voltage—even if the amount of leakage is acceptable using conventional diode testers. The amount of this "threshold voltage" that will cause regulator turn-on can vary greatly, depending upon the micro-controller in each regulator and the protection that has been put in front of it by the regulator manufacturer.

There are two types of regulators that can be affected.

Soft-start regulators

Soft-start regulators monitor the voltage of the stator-phase connection to determine when the engine has reached a specified rpm. The threshold voltage causes a small amount of current, known as "trigger current," to flow. When the regulator "sees" the trigger current, it goes into soft-start mode. In soft-start mode, the regulator allows partial rotor current to flow (up to 30 percent). That would be about two amps of battery drain with most alternators in use today.

Limp-mode regulators

Some regulators that are designed to self start, go into a limp mode whenever there is a problem in the activation circuit. They are also looking for trigger current. These regulators, if activated by leaking voltage, will go into full field, drawing five to seven amps. This amount of discharge can easily drain a battery overnight.

Keep in mind that both types of regulators are looking for voltage on the stator connection 24-7, whether the engine is running or not. The amperage required by the regulator for non-running activation to happen is mere milliamps. For this reason, a conventional leakage tester may not help much in preventing this problem. Those who are testing their reclaimed rectifiers for leakage already know that most used rectifiers have some leakage.

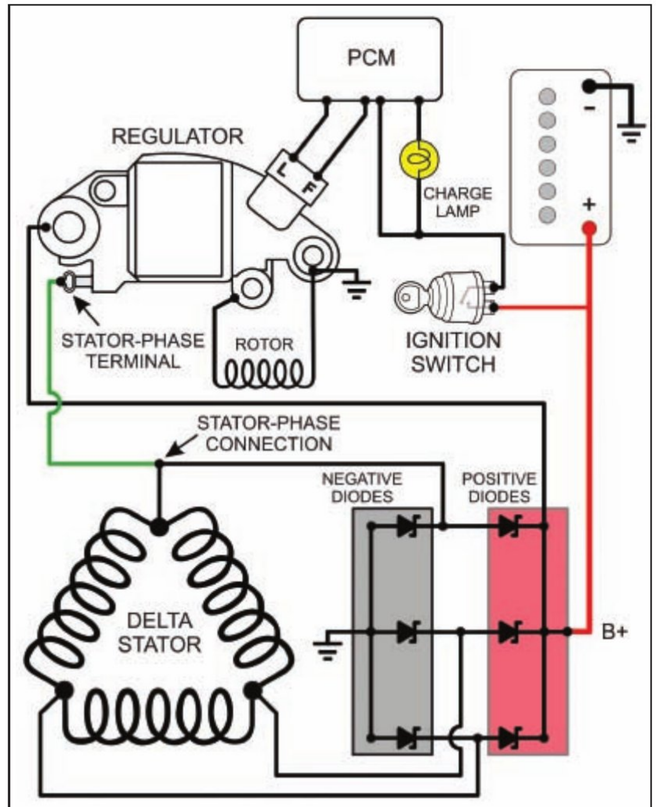

Figure 1— Simplified GM RVC system.

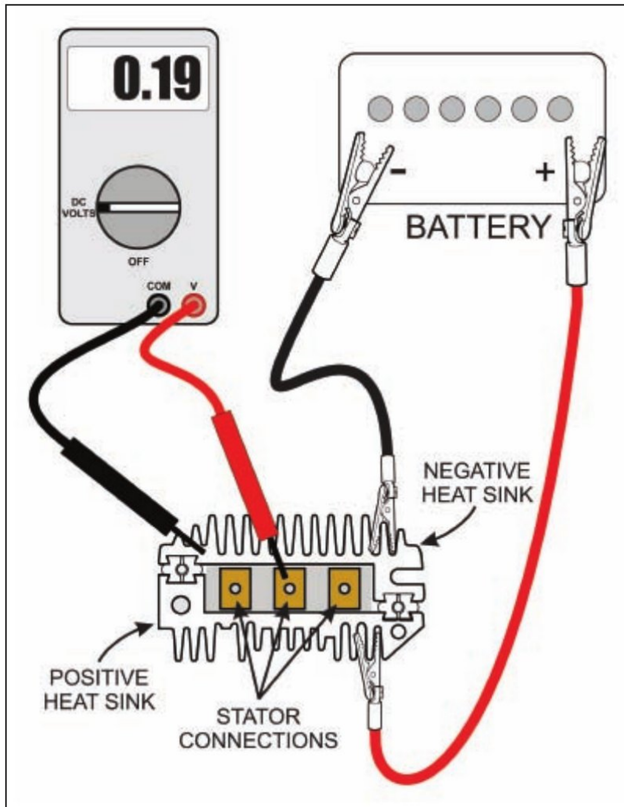

Figure 2— Correct testing hookup.

As you can see, between soft-start and limp-mode, the majority of regulators in use today can be affected. To complicate things further, the leakage does not have to come from a failing diode. Among other things, leakage can come from contamination by road salts, metallic dust or engine coolant, which may allow voltage to bypass the diodes. At this point you may be wondering, "What can I do to identify a problem rectifier?" Good news. There is a simple, easy test.

The test

This test can be performed either before or after the rectifier has been installed in the alternator. All that you need is a battery and a digital voltmeter. The battery voltage you use should match the application's system voltage—so a 24-volt rectifier should be tested using 24 volts. The source of voltage can be a battery or any DC power supply. You will be measuring DC voltage.

As shown in Figure 2, simply attach battery power directly to the rectifier heat sinks, both positive and negative. If testing the rectifier alone, you should measure the voltage between the rectifier negative heat sink and each stator connection. You might be thinking that the stator-

phase connection to the regulator goes to only one pair of diodes. However, leakage from any diode will travel through the stator windings and find the regulator. If testing a rectifier that is already attached to the stator, you simply need to check the voltage between the regulator's stator-phase terminal and ground. The regulator is looking only for voltage. The fact that it is DC voltage, not AC, does not matter for testing purposes. Under normal operation, the stator-phase connection produces AC voltage, which is rectified inside the regulator before it reaches the regulator microcontroller.

Most new rectifiers will test well below a tenth of a volt (Figure 3). Any rectifier that tests over 7/10ths of a volt (0.7 volt) could "wake up" the regulator after the vehicle has been parked for a period of time, or keep it awake after the engine has been shut down. As you can see in Figures 4 and 5, both of the used Bosch rectifiers show a reading much higher than that. The rectifier showing over five volts was draining the battery overnight.

Bench testing and on-vehicle testing

When bench testing an alternator, you might want to consider unplugging the regulator but leaving the alternator attached to the battery for a short time after the alternator has stopped spinning[1]. If trigger current is present from a leaking rectifier, you will see a discharge condition of full or partial field draw.

If you have a vehicle with a large key-off battery drain, there is a quick test you can do to see if the alternator is staying on and drawing field current. Simply hold a pair of pliers against the pulley nut. This is "low tech," but it works. If there is enough magnetism to strongly attract the pliers, you have field draw. Unplug the regulator:

- If the magnetism is still there, the problem is inside the alternator, and it is probably a leaking rectifier.
- If the magnetism goes away, check for voltage on the excitation wire in the plug.

Some charging systems used the sense wire as a source of field current (specifically Ford 2G, 3G and early 4G alternators). With these systems, field draw will go away when the regulator is unplugged, even if the drain is being caused by the rectifier. If the only voltage in the regulator plug is on the "A" (sense) terminal, you will know that the drain is being caused by a problem inside the alternator.

To put unexpected rotor draw into perspective, normal parasitic drain, after everything has shut down, is 20 to 30 milliamps. Keep in mind that some cars may take 30 minutes or more to completely shut down all electronic modules. However, an active regulator can draw up to 7,000 milliamps, which can easily drain a battery!

Special thanks to Dave Kaplan and Gene Kaiser of Regitar USA and Mike Schwartz of Minster Auto Electric for their help in preparing this article.

[1]On many test benches, the B+ circuit is energized only when the test motor is spinning, so you may have to manually control it. For example, on JIMCO test stands you must depress and hold the white Battery On button as the alternator is spinning down.

This Technical Document (CS201206A) along with other technical and membership information, may be accessed at electricalrebuilders.org.

ERE



Figure 3— This new Delphi AD rectifier tests well below acceptable limits.



Figure 4— Bosch rectifer with too much leakage.



Figure 5— Bosch rectifer being tested while installed on alternator.