ERA EXCHANGE

YOUR GUIDE TO ELECTRICAL REBUILDING

January 2021 $12.95

AUTO ELECTRIC CORNER
Shop Lighting, Winch Motors, PCM Charge Lamps and Tapered Pulleys

USING APPTRAK ONLINE
Part 2

BOSCH STARTER/GENERATORS
Harley-Davidson Golf Carts

UNANSWERED QUESTIONS
Denso 428000-2650

Electrical Rebuilder's Association ERA FOUNDED 2001

A WORD FROM THE PRESIDENT
ERA EXPO 2021 Set For May 20-23



Well, the pandemic year of 2020 is now behind us. Thankfully, worldwide efforts of scientists and pharmaceutical engineering specialists have developed multiple vaccines to contain and relieve the spread of this deadly disease that has taken away and hurt the world's vast population of peoples throughout the globe. My hope is that all the world leaders will put their egos and aggressions aside and provide decisive and speedy distribution of these vaccines to the world.

Now to ERA business… Unfortunately after submitting my last report, I was informed of the news of the passing of Henry (Hank) Henke. Henry was a personal friend and I had the pleasure of serving as his Executive Vice President during his four years (2011-2014) as ERA president. Henry was a true gentleman, a mentor and will be greatly missed by many in our industry.

Here is some better news. At the November monthly Board of Directors meeting, the ERA Tradeshow Committee proposed a change of date to enable a better chance of holding the ERA Tradeshow Expo in 2021. The Tradeshow Committee informed the Board of Directors that all venues and the pricing of hotel rooms and registrations would remain at the same rate as those of the postponed 2020 Tradeshow Expo. The Tradeshow Committee recommended that the show be moved to one of two weekends available between April and May of 2021.

The Board of Directors unanimously voted to move the ERA Tradeshow Expo to the latter of the two openings, the weekend of May 20-23. As always, this business news and all Board of Directors monthly meeting Minutes can be found on the Electrical Rebuilders Association website. Click on "Association Info" on the left-hand column of the homepage, and scroll down to "Minutes." Transparency has always been, and will continue to be a contributing factor to the success of the Electrical Rebuilders Association.

As I have said in the past, and will continue to say going forward, the Electrical Rebuilders Association is YOUR Association. Please get involved and be a part of it. On behalf of the entire ERA Board of Directors, and yours truly, we wish you, your employees and your families a very happy and prosperous and COVID-free 2021.

Ken Plourde

ABOUT THE COVER

Cutout relay coil in a 12v Bosch generator regulator.

ERA EXCHANGE

Volume 38 Number 2

January 2021

Published monthly by the
Electrical Rebuilder's Association
PO Box 906
Union, MO 63084
Phone 636-584-7400
office@electricalrebuilders.org

EDITORIAL ASSISTANT / Bob Thomas

DESIGN & PRODUCTION / Stephanie Schroeder

CONTRIBUTING WRITERS / Ken Plourde, Mohammad Samii, Bob Thomas, Morgan McDonald

CONTENTS

2 A WORD FROM THE PRESIDENT
2 NEW ERA MEMBERS
3 INDUSTRY NEWS
4 AUTO ELECTRIC CORNER — Shop Lighting, Winch Motors, PCM Charge Lamps and Tapered Pulleys
9 UNANSWERED QUESTIONS— Denso 428000-2650
10 USING APPTRAK ONLINE Part 2
14 BOSCH STARTER/GENERATORS Harley-Davidson Golf Carts
17 SPEND AN EXTRA MINUTE Words of wisdom from a fellow member
19 CLASSIFIED ADS

Copyright 2021 • Printed in the United States

The publisher retains the right to edit for content, style or space. All submissions become the property of the ERA Exchange. Opinions expressed herein of contributing authors do not necessarily reflect the opinion of the staff or policy of the ERA Exchange. All advertisers herein warrant that they are duly authorized to engage in the business described by them when applying for advertising and further warrant they are duly authorized to use any copy, illustration and any trademarks or trade names which may be specified for use in their ad. The ERA Exchange limits its liability due to production errors or omissions to the running of a correction in the next issue.

Rebuilding is Recycling!

INDUSTRY NEWS
& ANNOUNCEMENTS

The 2021 ERA Tradeshow in Cincinnati, Ohio has been scheduled for MAY 20-23rd.



More information will be available in upcoming issues.

Hotel

Holiday Inn Cincinnati
Airport Hotel
Erlanger, Kentucky 41018

(888) 294-5067
Group Code: ERA

Rooms are $99 per night + tax



Airport

Cincinnati/Northern Kentucky International Airport (CVG). Only 2.5 miles from the hotel!

AUTO ELECTRIC CORNER — Shop Lighting, Winch Motors, PCM Charge Lamps and Tapered Pulleys



BY MOHAMMAD SAMII

Shop Lights Upgrade…!

There are energy saving mandates in most states and municipalities related to financial programs and incentives that help businesses reduce their power bills by becoming more efficient. One of the things I had been planning to improve was a changeover of our shop and office lighting from traditional fluorescent lighting to the more efficient LED lights. Our lighting and their ballasts were getting old and continuously in need of replacement. The ballasts were getting harder to find and a lot more expensive, so an update was a good plan.

Then one day a man representing our local power company Ameren (formerly Illinois Power) showed up to assess our lighting and he informed us of the financial help that they can give us to offset some of the cost of an upgrade. The total cost estimate was $3000, but Ameren under some energy saving program was able to pay $2000, reducing our cost to the remaining $1000.

The job was done by a big electrical contractor, selected by the power company. They handled all of the paperwork in less than 3 weeks. Then they showed up with 3 trucks and 4 men, jumped onto the job, and got it all done in one afternoon. Lights for the shop, work area, offices, waiting room and such all got changed to the much brighter LED's, which they claim will save us enough money each month to pay off our share of the expenses easily (*see Figure 1*).

This sort of program may be available in your area. You should look into it and take advantage of it, if it is. It is quite worth it. Contact your power company to find out.

Winch Motors…!

Typical 3-post (reversible) winch motors have been around for years and are used on many applications where a strong reversible DC motor is needed. Like many units in our industry, years ago such motors (mostly made by Prestolite) commanded a very high price, thus rebuilding them was quite profitable. But again slowly and gradually they became a little less expensive and then offshore clones appeared which made the prices dip so far that rebuilding them has not been quite feasible.

Considering the cost of an armature or a set of field coils, you can buy a new clone motor and not worry about rebuilding the old OE one. Having said that, in my business we still rebuild them but with some limitations. If a little rework of the armature and reclaiming the field coils, and adding a set of new brushes and bushings or bearings get the motor revived, then I still prefer to rebuild it. But if any major parts need to be purchased, then a new clone is the answer.

A typical MBJ-6302 that is used widely by a particular customer of ours is a good example of this. The new ones are still pricey, but our customer also knows there are cheaper versions available, so we have to walk a tight rope in this case because of price limitations.

Replacing this 3-post motor with an aftermarket version runs into some issues that I would like to point out here: The original MBJ-6203 motor has its 3 posts (F1, F2, and A) in tandem. The aftermarket version has terminals laid out in the form of a triangle, as were some of the earlier Prestolite winch motors (*see Figure 2*). Replacing one type with the other requires the technician to make a note to attach the right cable to the right post. Otherwise it will not work and could also damage a new motor.

Bench testing goes as the follows but remember, the case must be grounded:

(A) For clockwise rotation

1- Connect **+B** to **"F1"**

2- Connect **"F2"** to **"A"** with a heavy jumper cable

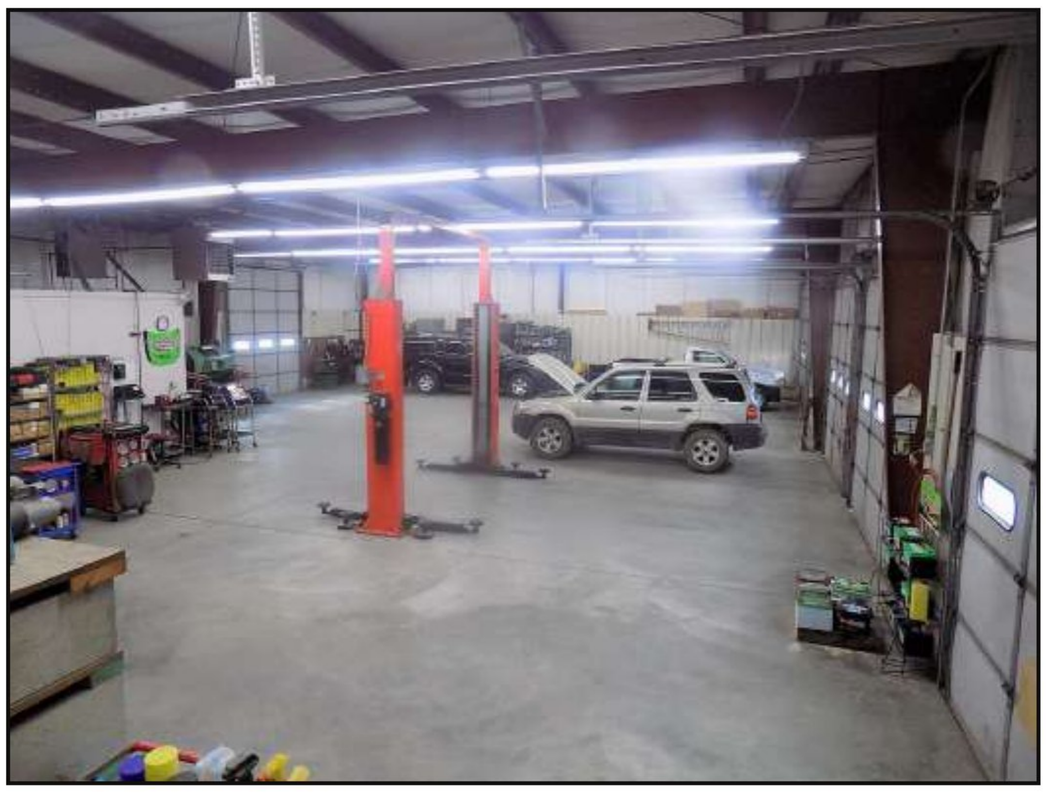

Figure 1 – Our new bright LED shop lights



Figure 2 – Winch motors post arrangements

(B) For Counter-clockwise rotation

1- Connect **"+B"** to **"F2"**

2- Connect **"F1"** to **"A"** with a heavy jumper cable

As you see, the post marked **"A"** in either type is a constant…sort of.

Alternator light, and a 1999 Buick Regal

A case we had recently involved the troubled charging system of a 1999 Buick Regal. A few recent questions on the Help-Line about warning light operation have prompted me to explain the basics of PCM-controlled GM alternator warning light operation within the confines and limitations of this column. But first, let's take a look at a standard non-PCM charging system warning light circuit (*see Figure 3*).

The diagram shows a non-PCM charge light for a typical Nissan alternator. Power from the ignition switch goes to the warning light (BAT light) on the dash (sometimes with a parallel resistor) and then into the "L" terminal of the alternator. With key on, "L" terminal makes the ground for the light, so it glows. Once the alternator start charging, the "L" terminal bounces back to the charging voltage, and the equal voltage across the bulb turns it off.

In a PCM-operated warning light, the principle is the same but with a little change. In GM applications (CS and AD's), PCM applies a 5V reference voltage to the "L" terminal (10V in 2000-2005 trucks). In some applications this voltage is delayed until engine cranks and starts. This is to reduce the cranking load by NOT energizing the alternator while cranking.

The graph (*see Figure 4*) captures the entire sequence of operation. Note: the battery voltage is in blue on the left side of the graph, and the "L" terminal voltage is in red, on the right side scale of the capture.

The circled "1" is where the ignition key was turned on and the PCM has applied the 5V to the regulator. This voltage is immediately pulled down ("2") but bounces back to its original 5V when the engine cranks and starts ("3").

Meanwhile, you can see the battery voltage trace on top (blue) showing the very common signature of a Crank and Start cycle, and then the voltage rises after the alternator begins charging, stabilizing around 14V, which is the charging voltage. The Load Response Curve (LRC) of 2.5 second can be easily seen (measured) from the time alternator start charging until to voltage reaches the peak of approximately 14V.

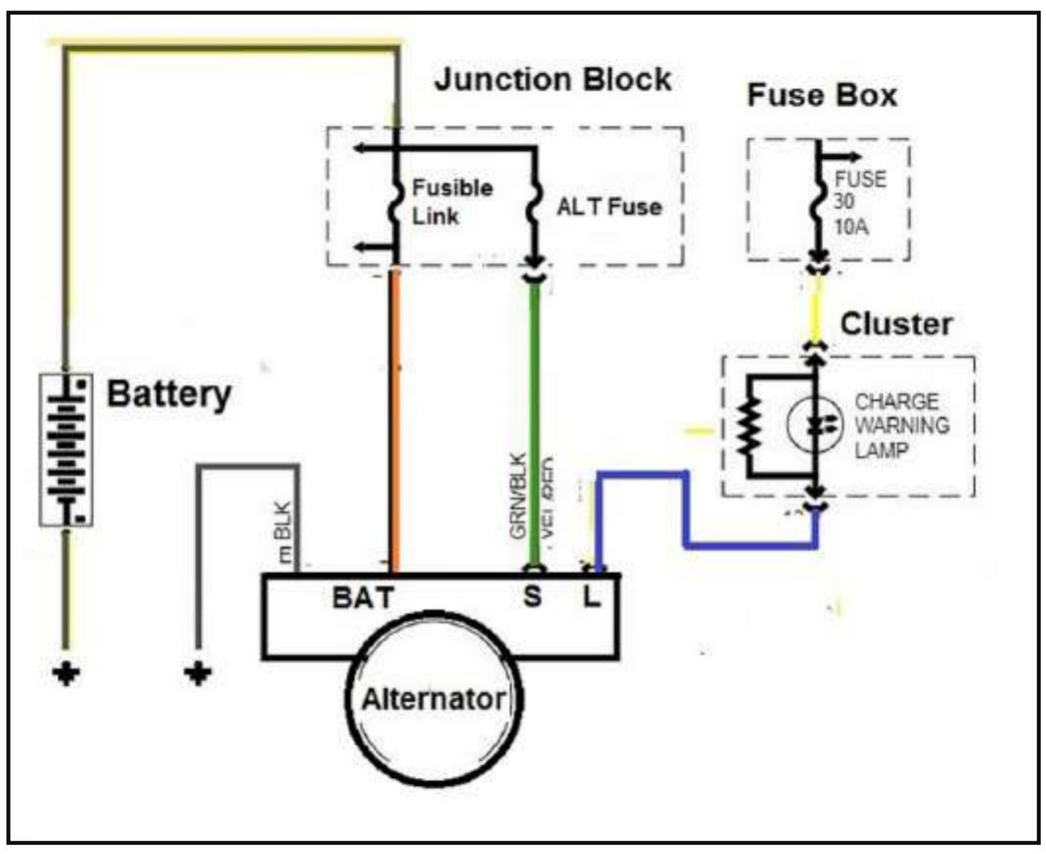

Figure 3 – Typical non-PCM charge light

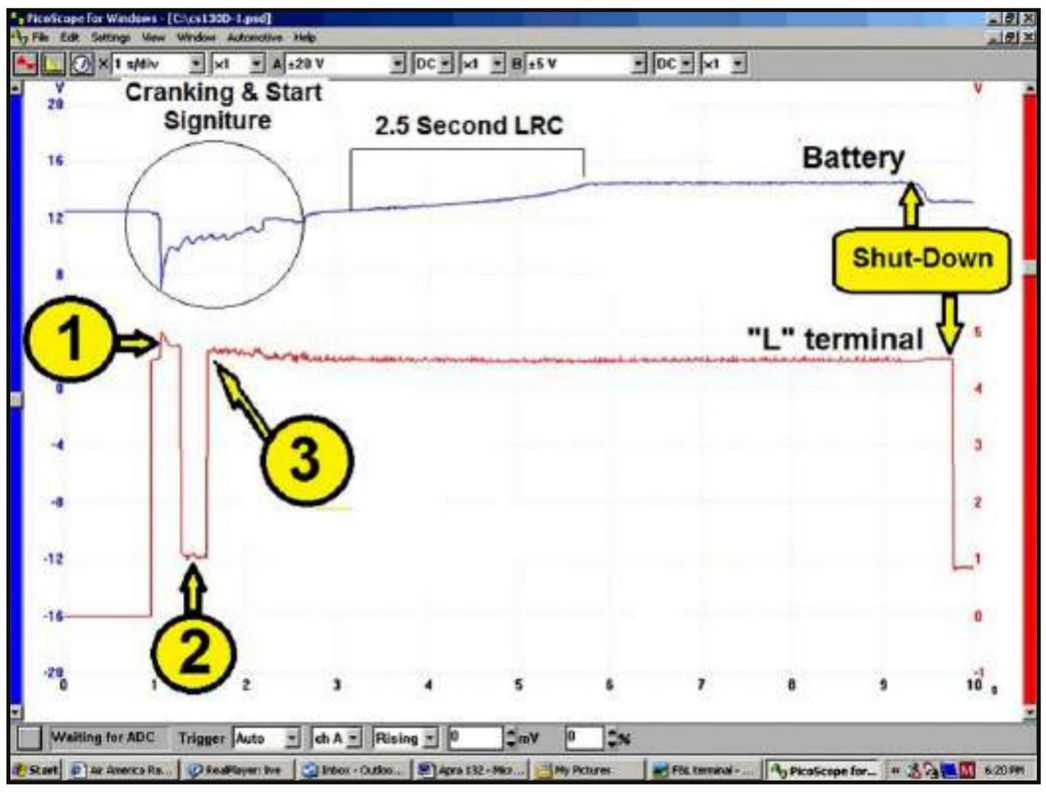

Figure 4 – GM's (CS-AD) PCM regulator activation capture



The PCM is programmed to see this dip-and-bounce of the applied "L" terminal voltage, and then looks at the charging voltage, and if it finds these factors within limits, it puts information over data lines (GM's Class-II bus or CAN) which will be received by the cluster, to turn the alternator warning light (BAT light) off. Any variation from this is considered abnormal and a "FAULT", and the light would not be turned off. There is no wiring or physical connection between the alternator's "L" terminal and the light on the instrument cluster.

The problem with our 1999 Buick Regal that had a fresh 8234 (a CS-130D) alternator installed was that it was not getting the 5V consistently but occasionally (*see Figure 5*). The alternator was checked in and out of the car to be found OK. The PCM became the suspicious item after the wiring from alternator to PCM were checked.

We have changed some PCMs for this sort of problem but this one was not a candidate due to a handicapped (physically and financially) older lady owner. Another shop had sold her an alternator and a new battery that I believe were not needed and it sure did not fix the charging and battery discharge problem.

I do not consider this to be an approved repair method but we needed to do something to get her going again. I took power from a connector mounted on the inside of the fender skirt (*see Figure 6*), that goes to the wiper motor and its controller. The yellow wire is the



Figure 5 – Installed 8324 alternator on Regal to no avail



ignition source. I installed a 47 Ohm resistor between that ignition wire to the "L" terminal wire (Red in color… called circuit # 225) of the alternator, and that solved our problem…!

The alternator would of course now energize every time, and the existing voltage on the line seemed to be enough to fool the PCM that all was fine with the alternator. It turned the BAT light off every time. It has been months now since this was done, and we have not heard any complaint from the owner yet.

Tapered Pulley Collar/Spacer

Our first experience with pulleys that had tapered conical collars (*see Figure 7*) were some mid-90's Cadillac's with 125-140 Amp CS-144 alternators. These were also seen on some AG-Industrial applications where many examples of it is still being used in current models, particularly on some Bosch alternators.

Tightening and torquing these types of collars to get it tight enough so the pulley does not come loose is a challenge that you must pay close attention to. The fact is, if the pulley, fan and spacers are not completely seated tightly against the DE bearing's inside race, in other words, all the slack must be taken up. Torquing the nut may get the spacer tight in the pulley but not necessarily make it secure enough to the rotor shaft. So, to make sure the pulley, fan, and the spacer are seated tightly, the rotor and DE housing assembly can be laid over the pulley and the whole assembly be tightly pressed down (*see Figure 8*). Then you can reach the threaded rotor shaft from underneath, install the lock washer and the nut, and tighten it with an impact-gun, while still being held tight against each other. This way you can make sure that it remains tight and cannot vibrate loose.

Well, that's all for this issue. Until I see you again, stay safe and keep up the good work.

You can contact Mohammad Samii by email at: sammyselectric@sbcglobal.net, or by calling the ERA Tech Help Line at 636-584-8324



Figure 6 – An Ignition feed taken from wiper motor connector



Figure 7 – Tapered pulley collar (J&N 500-12013)

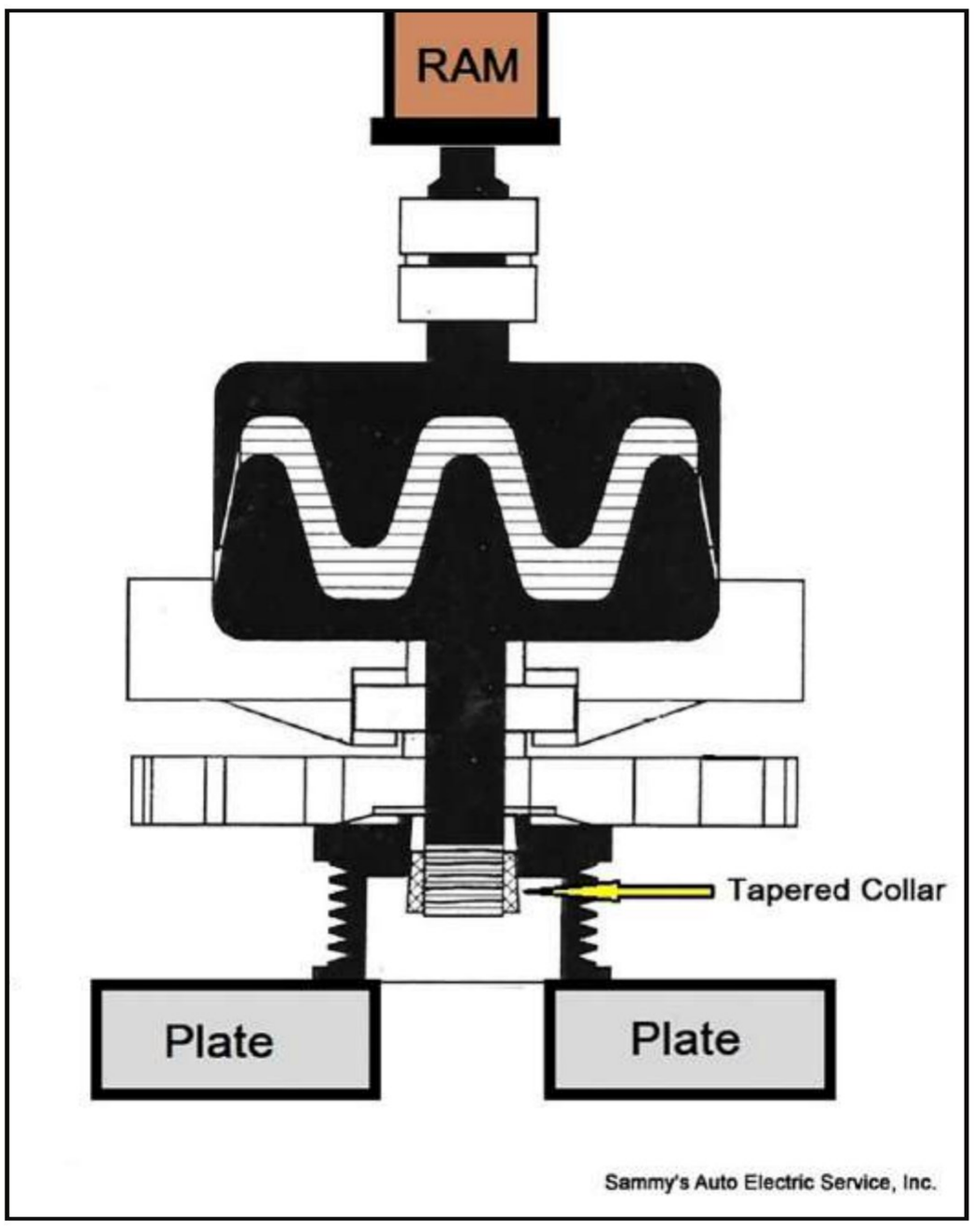

Figure 8 – Tightening tapered pulley collar

Romaine Electric
PRECISION PRODUCTS

Winter Specials

Snow Plow, Salt Spreader
Snow Blower & Snow Mobile Motors

Snow Plow



W5692
Meyer, 12 Volt, CW



W6206
Fisher & Western
12 Volt, 1.2kw, CW



W6294
Fisher & Western
12 Volt, CW

Salt Spreader



10788N
Western, Curtis, SnowEx
12 Volt, 2.5mm Slot



W8018
Buyers, 12 Volt, Reversible



19498N
SnowEx, 12 Volt



10711N
Meyer, 12 Volt, CCW

Snow Blower



5899N
Tecumseh - PMDD, 120 Volt, 16T, CCW





5897N
Tecumseh - PMDD, 120 Volt, 9T, CCW

Snow Mobile



5944N - UT PMDD
Arctic Cat, 12 Volt, CW



18871N - Denso PMDD
Ski-Doo, 12 Volt, 0.6kw, 9T

Solenoids



7-1026
SPST ID 12V, 100A, 3-Term



7-1232
Polaris ATV - 12 Volt, 3-Term

Romaine is only a call or click away
www.romaineelectric.com

ROMAINE EZ-CONNECT™

West Coast 1-800-426-5005
Midwest/East Coast 1-833-970-0068

UNANSWERED QUESTIONS — Denso 428000-2650



BY BOB THOMAS

Nothing bothers me more than an unanswered question, or to be more specific, a customer's problem that as described, lacks any definitive answer.

A friend dropped off a Denso starter, 428000-2651 or Lester 18981, a relatively popular 12 volt, 2.2 kW unit that was used on some Komatsu and Cummins engines in a variety of industrial applications. This particular starter had been removed from a customer's Doosan articulating loader.

The complaint was poor engagement and occasional grinding. My first question (over the phone, before he even brought me the problem starter) was: "Have you inspected the ring gear once the starter was removed?"

I was told, "Yes, the flywheel looked fine. There was no visible damage." In addition, he said that his customer has four of these machines, and they had already removed a starter from another one that was down for engine work. That used starter from the other machine was now functioning perfectly on the troubled loader. It was proof enough for them that the problem had to be in the starter and it kind of cemented that same thought in my mind as well. There had to be something wrong with the starter that was being dropped off.

My expectation was to see a damaged pinion gear, but once I had it in my hands, I could not see any apparent damage. But what I did notice was that the teeth on this pinion were cut almost square on the engagement end and were not chamfered (*see Figure 1*).

This type of pinion was not totally unheard of on Denso starters. I remembered seeing gears cut this way on a number of smaller Denso units in the past. For instance, the original gears used on the the first Toyota Camrys with a V-6 engine (Lester 17774) initially had square cut gears. Milling was a sporadic problem that began to surface after they had been in the field for only a few years.

Toyota put out a TSB on the problem for those vehicles and their "fix" called for dealers to replace the flywheel and the starter (which was a newer version with a chamfered pinion gear being the only difference). I was already modifying some of the original pinions on our rebuilt units at the time after getting similar complaints from my installers. The aftermarket soon offered chamfered pinions too. None of my customers ever reported seeing a damaged flywheel on a Camry, but I am not going to say that there were none.

A complete teardown and inspection of the troubled loader's starter seemed to confirm that it was most likely the original Denso unit that came on that machine. The contacts were almost paper thin, and the rear bearing on the armature was close to complete failure. For that much wear on those other parts, I would have expected to see more wear on the pinion, especially since the complaint was grinding without engagement.

Checking with various suppliers, I noticed that all of them were selling chamfered gears on their new replacement units as well as complete aftermarket drives. The new OE pinion that Denso was offering seemed to be identical to the one on the starter (no chamfer – but that is based only on a photo). I ordered an aftermarket complete drive, seen here next to the original drive (*see Figure 2*). Once the engine work was completed, it was installed on that loader. They reported that the chamfered pinion in the rebuilt starter was cranking perfectly on the loader with the repaired engine.

So the unanswered question is this: What caused the engagement problem on the first loader? If you have run into a similar complaint on this particular unit or know more about this problem, please share it so that we can inform other readers.

If you happen to have an unanswered question of your own, please share that too. We can post it here in a future issue and perhaps get some answers.

You can contact Bob Thomas by email at ere.bobt@gmail.com or by phone at: 904-673-7301.

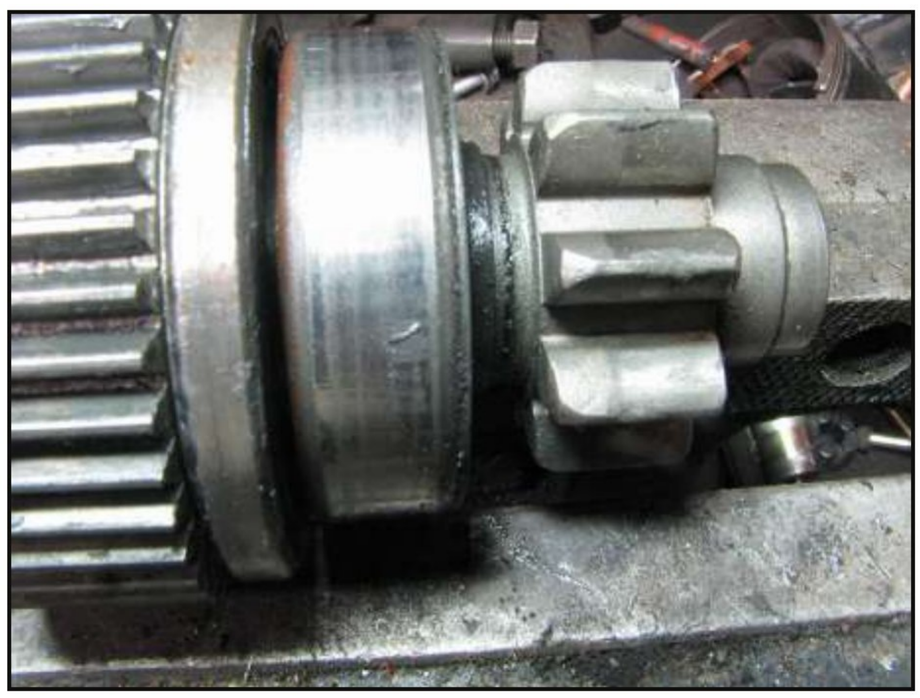

Figure 1 – Denso drive from the problem starter.



Figure 2 – New aftermarket drive (right) next to original OEM drive.

Using Apptrak Online Part 2



BY BOB THOMAS

Last month we explained how to look up applications using Apptrak Online, a database designed for rebuilders by a rebuilder. Like other databases that are available in our industry, APPTRAK provides unit look-up by application and component parts breakdowns. But it also offers some other tools that cannot be found anywhere else.

A little known feature of Apptrak is its versatile ARS tool. The letters stand for armature, rotor and stator. It can be used to quickly identify any unknown armature, rotor or stator that you happen to run into or may have laying around in your shop.

It could be that old unknown rewound armature that is in perfect shape, but the label on its box fell off years ago and now you have no idea what it fits. Or perhaps a good salvaged rotor that turned up under a bench and all that you know is that it fits a small Denso alternator. The ARS tool can identify it and tell you quickly every unit that it was used in. Assigning such parts real numbers can save you a lot of time when you happen to need one.

To get to this tool, simply select ARS on the menu bar on Apptrak's home page, which takes you to a page with four options: Armature, Rotor, Stator and Rotor Coil. Selecting Armatures for instance,

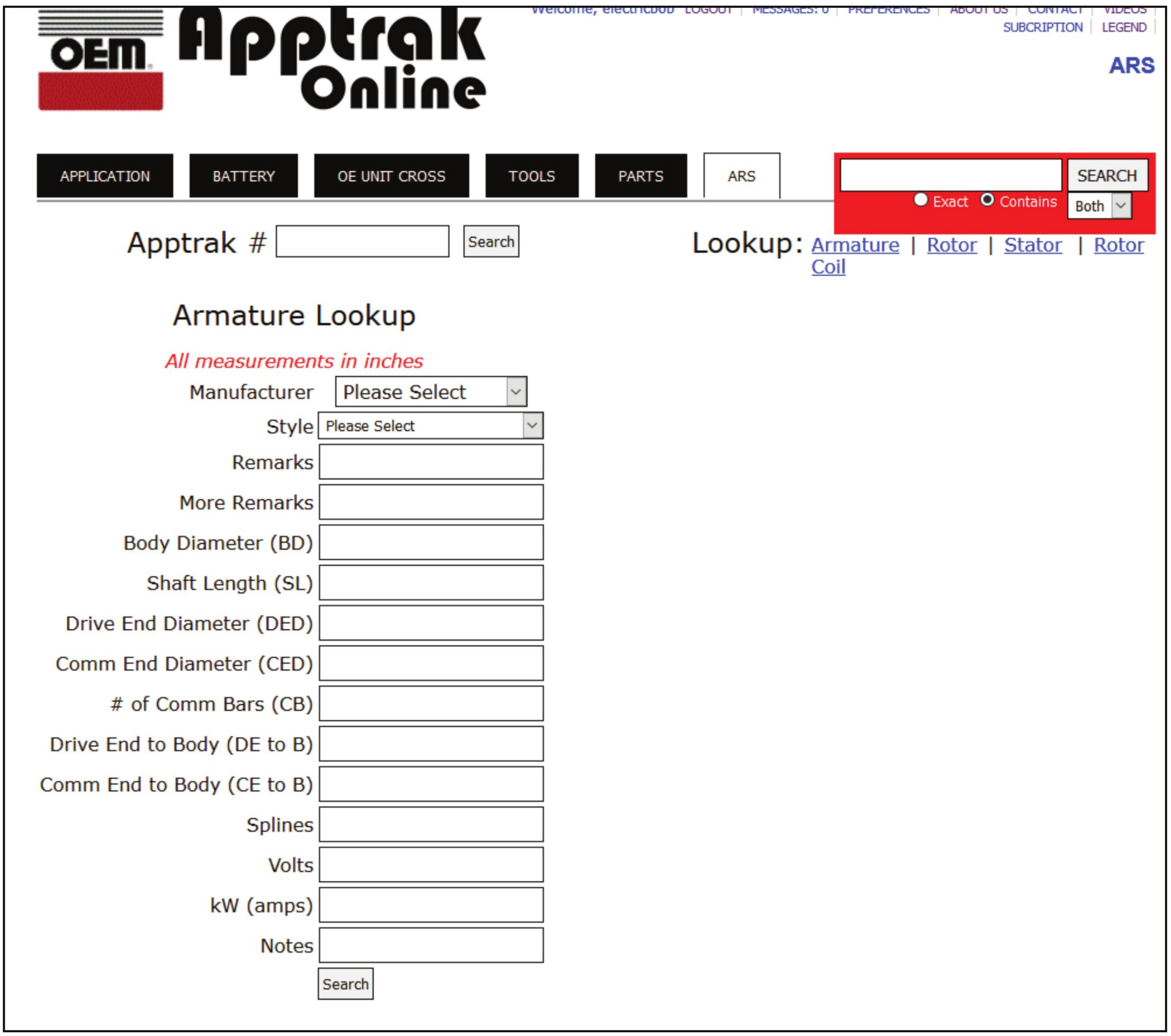

Figure 1

will take you a page with a set of blank fields. Each one is a dimension of one part of an armature (*see Figure 1*). Fill in as many as you can and hit the search button at the bottom.

This will take you to a page assigned to that paricular armature, which provides its OE part number and Whatcom Electric's part number (*see Figure 2*). By using either number in the main search box (top right corner), you will end up on a page, which gives you two yellow button options (*see Figure 3*).

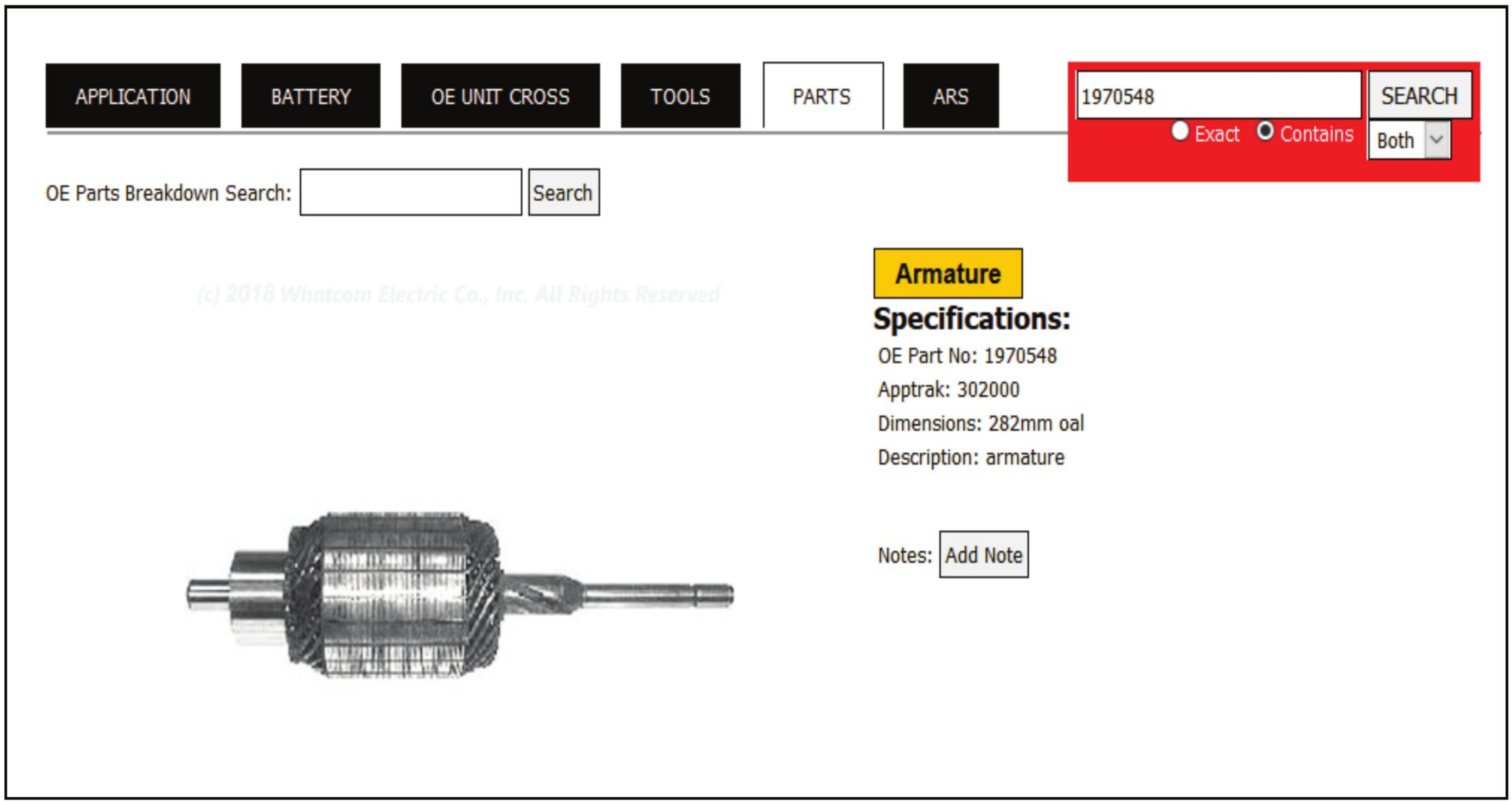

Figure 2



USING APPTRAK ONLINE

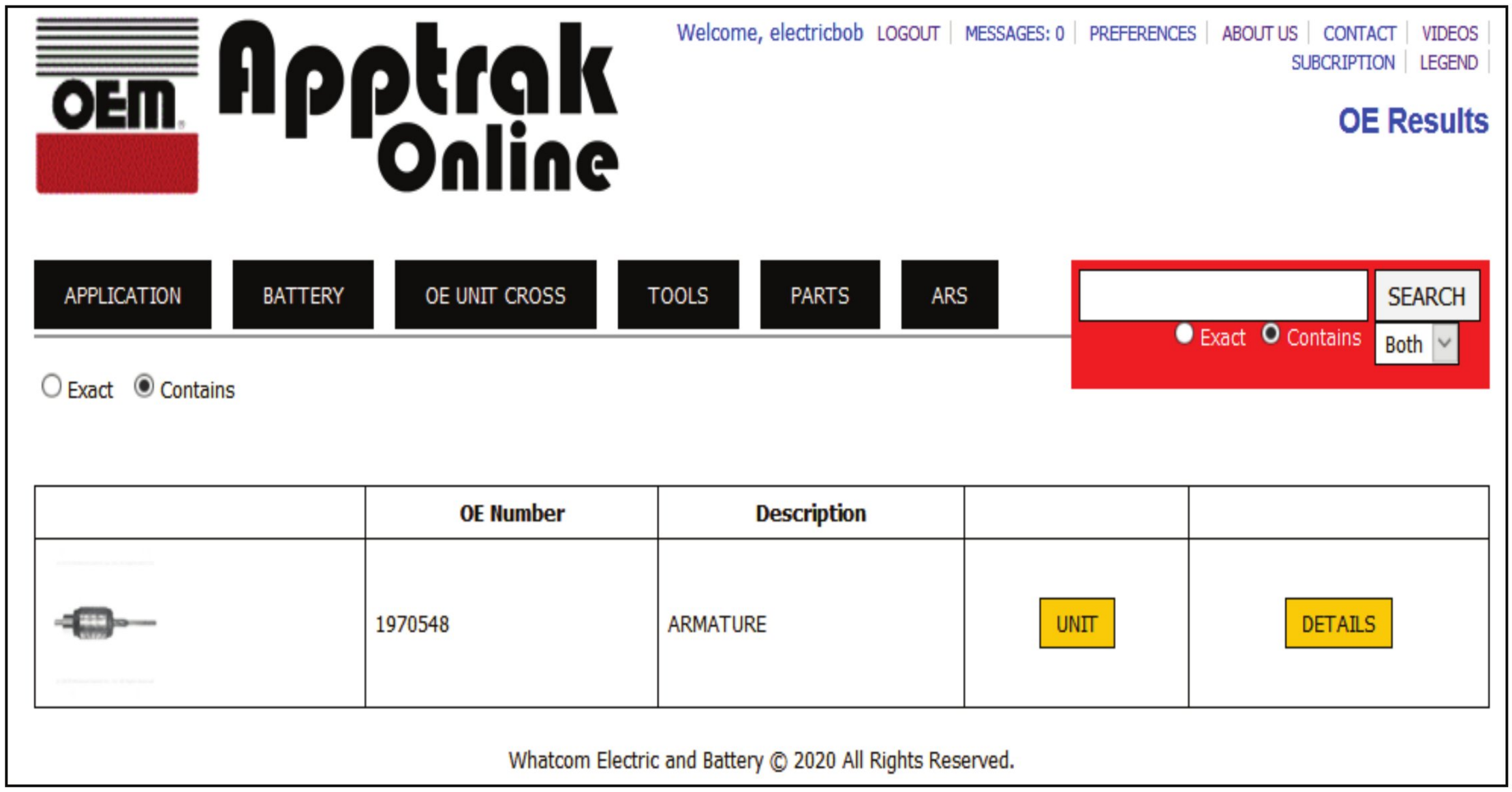

Figure 3



USING APPTRAK ONLINE

DETAILS provides all of the specifications for that armature and UNITS provides a complete list of starters that used that armature (*see Figure 4*), both OE and Lester unit numbers. This screen shot shows just part of the listing for this popular HT Delco, which brought up nearly 200 different Delco starter numbers.

As you can see, Apptrack Online is a truly unique database that includes specifications for units and component parts that are not available anywhere else. ERA members who are using it recommend it to others.

You can try Apptrak Online for two weeks without charge by calling the number on their ad in this issue. Next month we will show you a similar tool for identifying units without numbers.

APPLICATION | BATTERY | OE UNIT CROSS | TOOLS

OE Parts Breakdown Search: Search

Click the Whatcom Number or the OE Number to be taken to the OE Cross page

OE Number	OE Brand	Whatcom	WE-MFG	Lester
1109054	Delco Remy			
1109058	Delco Remy			
1109083	Delco Remy			4370
1998461	Delco Remy			
1108753	Delco Remy	46100		4174
1109034	Delco Remy	46100	46100-00	4174
1109075	Delco Remy	46100		4174
1998206	Delco Remy	46100		4174
1998231	Delco Remy	46100		4174
1998250	Delco Remy	46100		4174
1998472	Delco Remy	46100		4174
1998501	Delco Remy	46100		4174
1108429	Delco Remy	62103		3510
1108430	Delco Remy	62103	62103-00	3510
1108502	Delco Remy	62103		3510
1108748	Delco Remy	62103		3510
1108776	Delco Remy	62103		3510
1108781	Delco Remy	62103		3510
1108782	Delco Remy	62103		3510
1108796	Delco Remy	62103		3510
1109025	Delco Remy	62103		3510
1109052	Delco Remy	62103		3510

Figure 4

Made In USA

Jimco's SR200 Stator-Rotor-Diode Tester



The JIMCO SR200 give you the ability to load test:

STATORS - Up to 200 A, for opens, shorts, and grounds — *even while connected to the rectifier!*

DIODES - Including avalanche diodes and diode trios — *even while connected to the stator!*

ROTORS - For field draw, and for shorts, opens, and grounds

CALL TO ORDER YOURS TODAY!!

Ph: 816-331-1917 Email: info@jimcotest.com

Website jimcotest.com

BOSCH STARTER/GENERATORS
Harley-Davidson Golf Carts



BY BOB THOMAS

When you hear the brand name, Harley-Davidson, the first thing that comes to mind is a big two-wheeled machine like their classic V-twin Electra Glide. But few people know that the company also manufactured golf carts for 18 years, from 1963 until 1981, when that part of the business was sold off to another cart manufacturer.

The first of these carts were three-wheelers (*see Figure 1*), while many later models had four wheels that made them a little more stable. Harley-Davidson carts were used by many golf courses nationwide throughout the late 60's and 70's. Today, those that survived have become collectible.

All of H-D's carts utilized a 245-cubic-centimeter, single-cylinder, two-cycle engine for propulsion. For the first four years of production, a starter-generator was built into the engine crankcase, out-of-sight and impossible to service without tearing down the engine. That unit was managed by a dual purpose control box that contained a generator voltage regulator for charging and a starter relay for cranking.

Beginning in 1967, a belt-driven Bosch starter-generator (*see Figure 2*) took over the tasks of cranking the engine and charging the battery on their golf carts. A Bosch voltage regulator controlled the charging while a continuous duty solenoid controlled the cranking (*see Figure 3*).

The use of starter-generators allowed Harley to save considerable weight by eliminating the need for a transmission for reverse gear. The starter-generator simply started the engine in reverse when backing up was required. That was accomplished by way of a two-position reverse-polarity switch. Since two-cycle engines have ports instead of valves, they are capable of



Figure 1 – Early model three-wheel Harley-Davidson golf cart.

COLLET BEARING PUSHER

A newly improved bearing removal system for removing those challenging bearings.

A Tool that Pays for itself in Time Saved!

DELCO
Automotive, Industrial, Marine
Applications with 35mm bearings behind slipring, against straight or spiral fan blades

DENSO
Automotive, Industrial
Denso hairpin type alternators with 35mm bearing inside dust shield

Removes Bearings & Races Super-Fast In Seconds!

CAE PULLERS LLC
Tel 727.432.2406
Email: caepuller@yahoo.com
Web: www.caepullers.com

MEMBER OF ERA Electrical Rebuilder's Association

Tools designed by a Rebuilder for Rebuilders Since 1989

Demonstration videos available at our website

running equally well in either direction – though that capability is seldom utilized in other two-cycle applications.

Just like the more modern four-cycle gas-powered carts that you see today, the switches on Harley-Davidson's carts are a key off-and-on for ignition and an accelerator pedal to take off and go, which activates the starter as well as control the cart's speed. To use reverse, the driver had

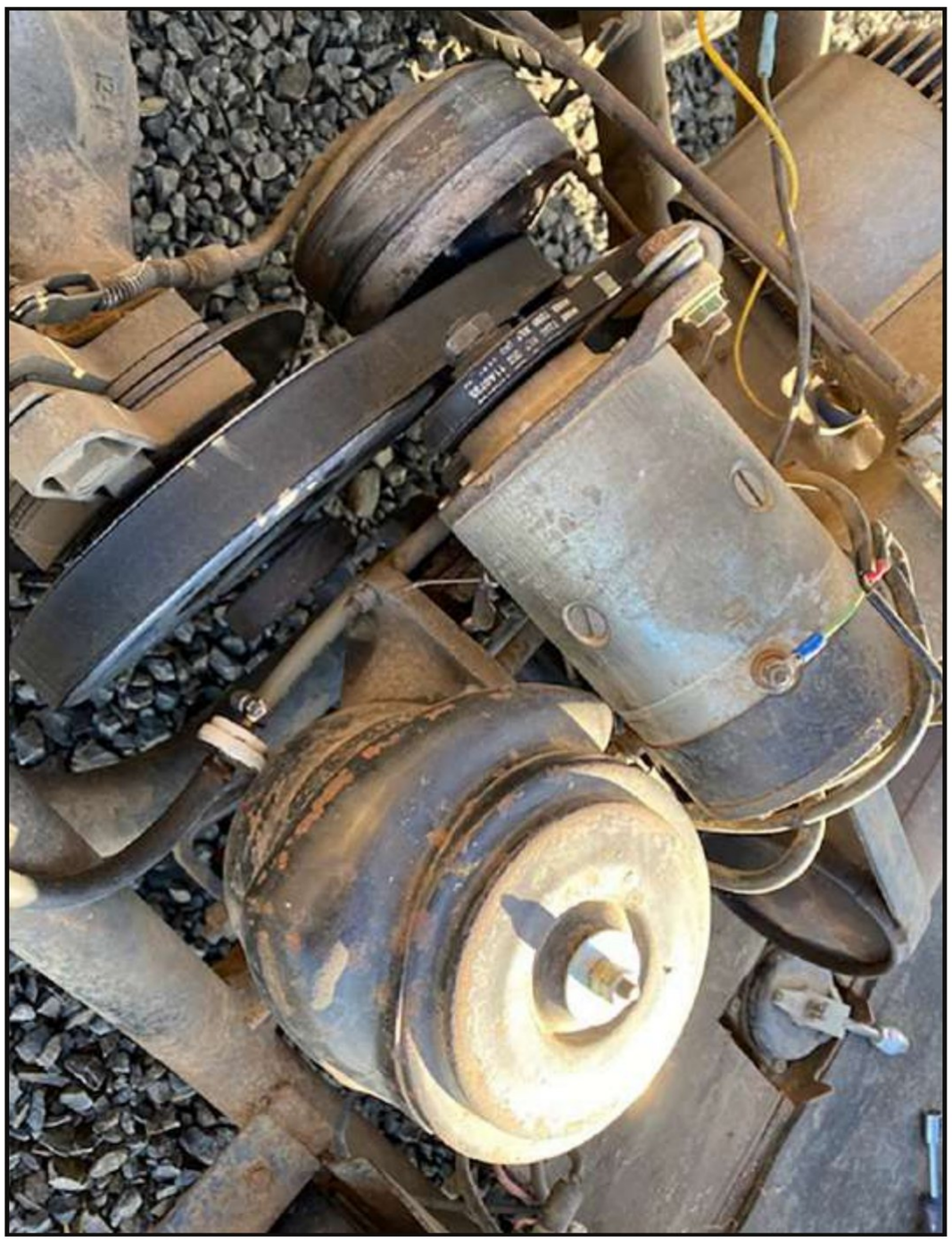

Figure 2 – Bosch starter/generator, seen here mounted on a Harley-Davidson golf cart engine.

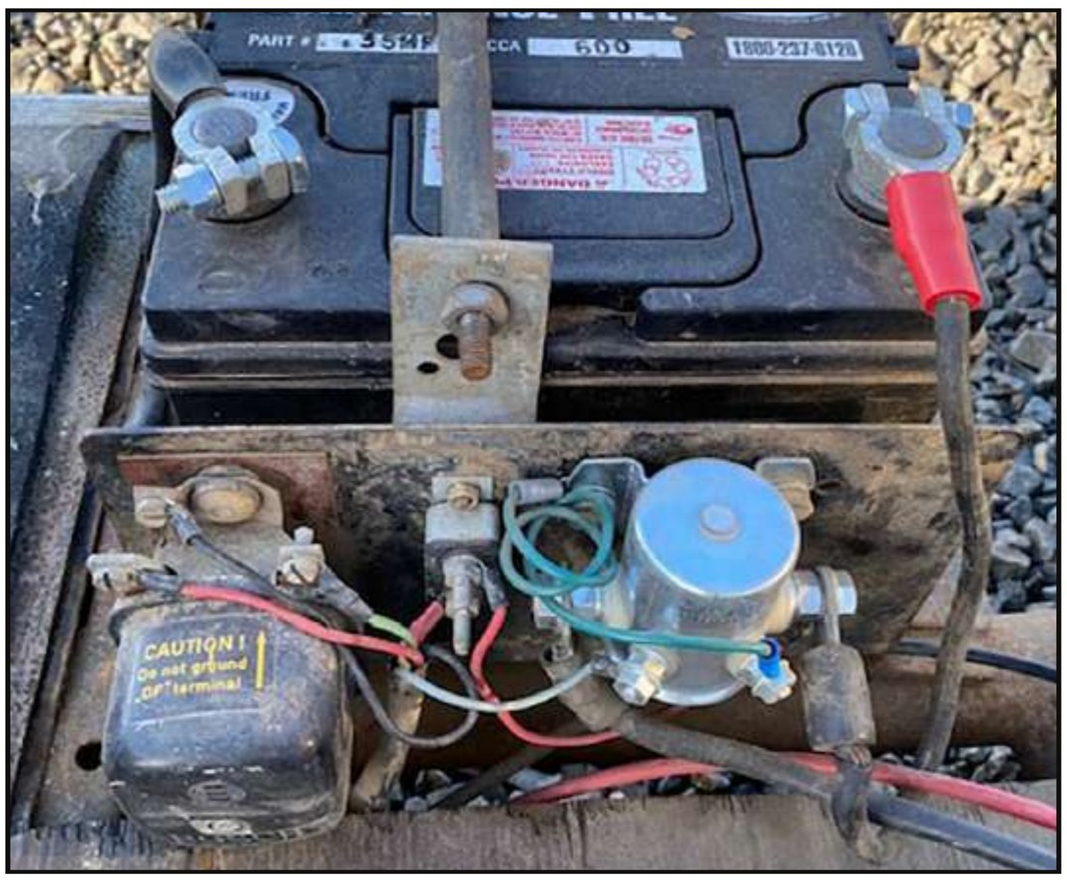

Figure 3 – Bosch voltage regulator and start relay.

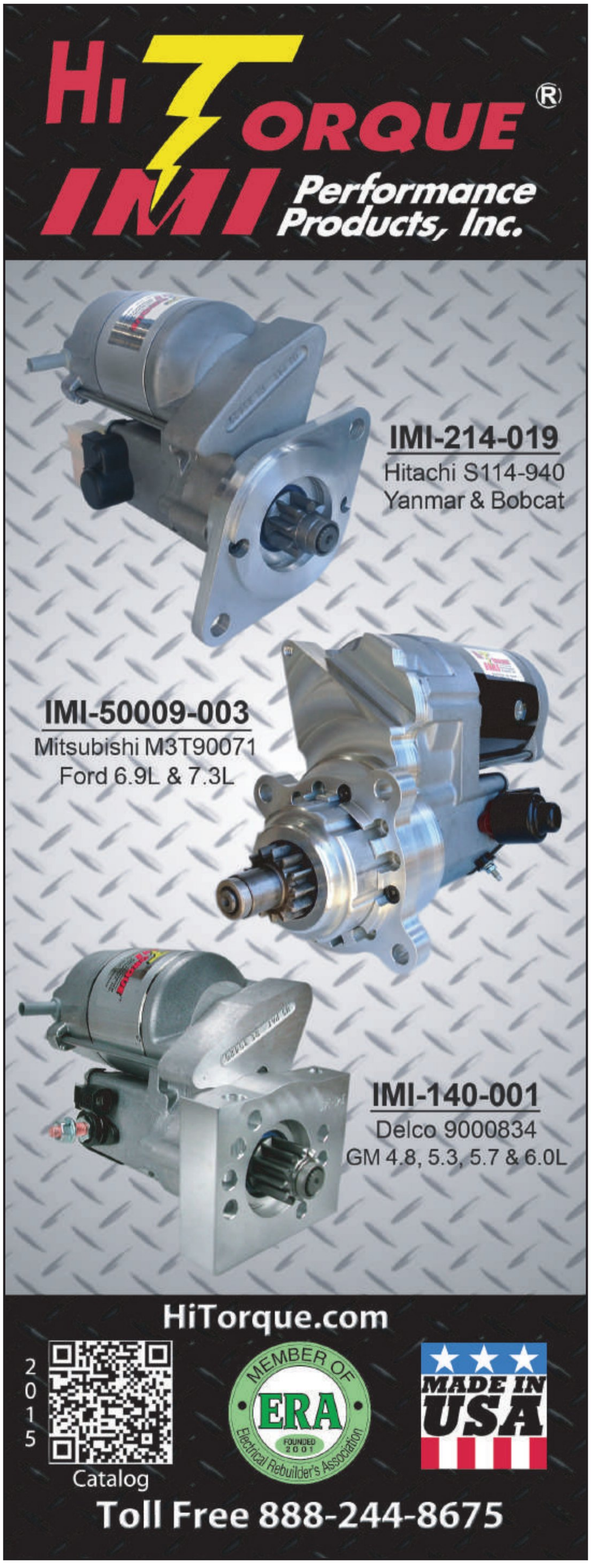

to stop the cart, allow the engine to come to a complete stop, throw a reversing lever below the driver's seat, and then hit the gas pedal again to move the cart backwards.

A few months ago, Mike Schroeder of Central Automotive Electric in Union, Missouri ran into one of these carts that was brought in by a customer. "It was different from anything I'd ever seen before," he explained. What baffled him most was the Bosch voltage regulator (that looked like a VW Beetle regulator) but had no wires connected to its B+ or D terminals. While searching for help, he soon discovered that this particular system was not in the JIMCO diagrams. So he called Juan Grube to see if he knew anything about it. Grube did (as expected) and explained how it worked and why the cutout in the regulator was not needed on any golf cart starter/generator application.

Then Schroeder remembered that ERA member Larry Hagemeister of Hagemeister Enterprises, Inc in Lebanon, Oregon had once mentioned owning one of these golf carts, procured when a customer backed out of a repair half way through it. A phone call revealed that Hagemeister not only still had the Harley-Davidson golf cart (*see Figure 4*), a four wheeler, but that he also possessed a factory service manual for it, which he shared.

In this system, the gas pedal/accelerator switch serves two purposes. First it connects the starter/generator to the battery once the pedal is pressed down. That activates the starter to crank the engine. It also controls the throttle in the carburetor. So long as the pedal is down, the starter/generator is always connected to the battery. This is basically how all motor driven carts with starter/generators operate.

Once the engine starts, the starter/generator begins to create output and the accelerator switch does what a cutout would do in a normal generator system – keeping the armature terminal connected to the battery for as long as the engine is running. The voltage regulator only has to control voltage and amperage because the accelerator switch takes the place of a cutout relay.

The original Bosch voltage regulator that was used on these carts may or may not have had a cut out or the B+ and D terminals. But if it did have them as the diagram suggests (*see Figure 5*), those terminals were obviously not used. This particular diagram covers late 1968 and 69 model carts. There is no reason one could not use a common 12 volt VW generator regulator on any of these carts using the Bosch starter/generator. Simply don't attach any wires to its B+ and D terminals.

You may wonder how this motor/generator is able to charge in both directions. The answer is pretty simple, it can't. It only charges going forward. There is no output when backing up. The battery powers the ignition system when using reverse.

You can find a copy of the complete electrical system section of the service manual in the ERA Wiring Diagram Library on our website, by looking under Harley-Davidson. This 40 page document includes diagrams and detailed descriptions of the electrical systems of all of these golf carts, from the very first model in 1963 to the last one produced by H-D in 1981.

Special thanks to ERA members Mike Schroeder for sharing the story and Larry Hagemeister for providing photos, and the service manual pages. *You can contact Bob Thomas by email at: ere.bobt@gmail.com or by phone at 904-673-7301.*



Figure 4 – Later model four-wheel Harley golf cart.

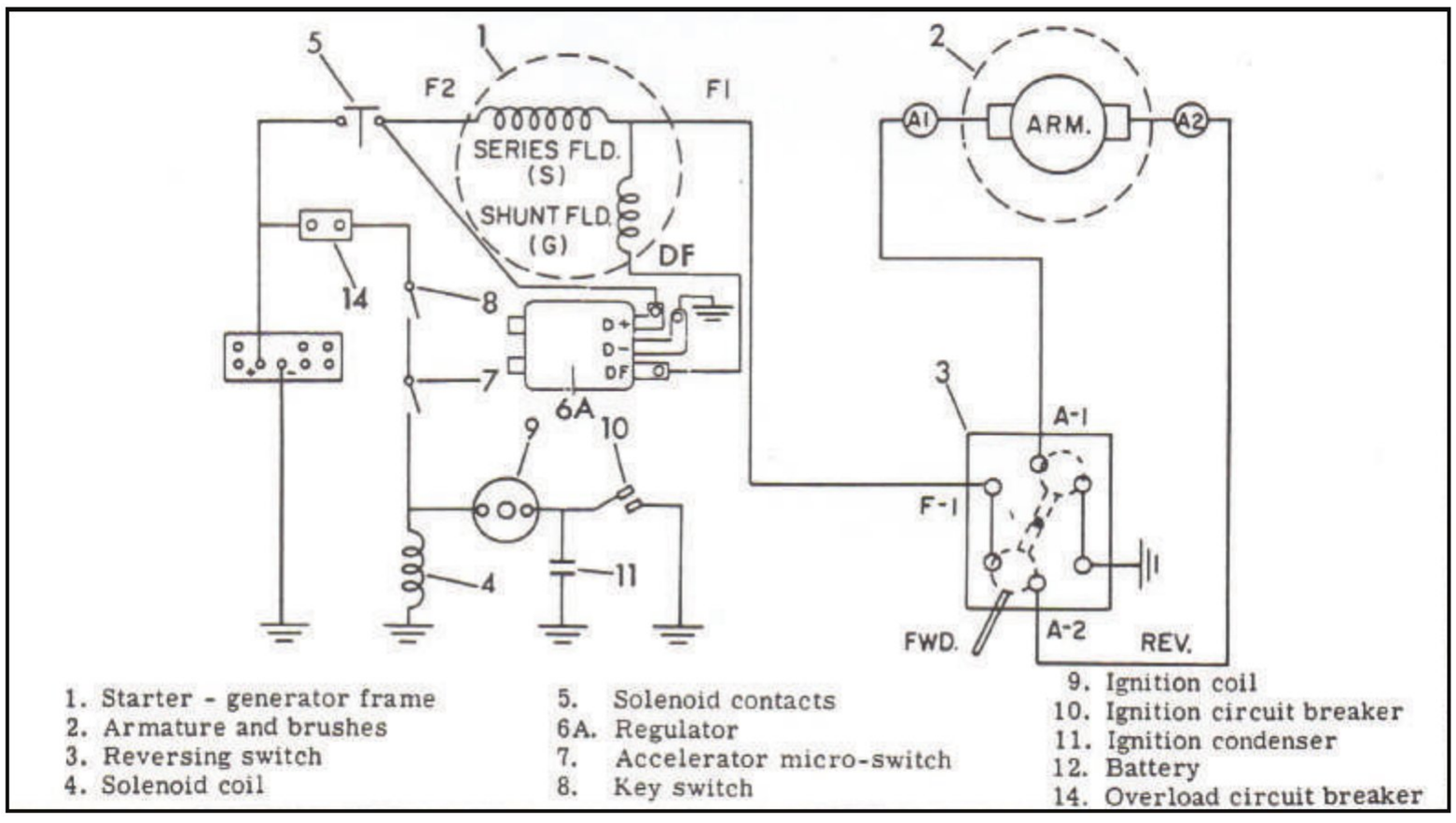

Figure 5 – Starter-generator wiring diagram for late 60's models.

SPEND AN EXTRA MINUTE
Words of wisdom from a fellow member

To my Fellow ERA Members,

Knowing what you are doing, being an expert, is the main advantage that you have over most others that are underselling you.

The availability of cheap new units is a bigger worry for most of us than it should be. People buy with price as their first consideration, it's just our nature. BUT, if you get the chance to talk to someone, a current or potential customer, spend an extra minute, and tell them why they should use you instead.

It will impress the customer even if they don't understand it completely, if you take a literal minute and tell that you tested both brand new and some reclaimed original field coils that you had and the used ones will be 30 % more powerful, or something to that effect. You'll never be the cheapest but you CAN compete with your knowledge and product quality. Knowledge is literally your most powerful asset with finished product performance/appearance following. Price is after that.

Most customers will appreciate that you tried to explain it to them and word of mouth is the most reliable new customer tool you will ever have. It could be person to person locally or even someone in a forum somewhere on the other side of the continent. Recommendations and praise from outside sources means a lot to a potential customer.

Sincerely, *Morgan McDonald*

Morgan McDonald is the owner of McDonald Carb & Ignition in Jefferson, Georgia. You can reach Morgan by email at: info@mcdonaldcarb.com or by phone at: (706) 367-4179



NEED HELP?
It's just a phone call away

1-636-584-TECH (8324)

Tech Help from Mohammad Samii



Do you need help testing an alternator or getting it to work as it should on a vehicle? Call the ERA Tech Help Line and talk to an industry veteran that has over 40 years of rebuilding and on-car experience. Mohammad Samii can help you to find the answers that you need to solve any rebuilding problem. No question is too difficult. "Sammy" has a formidable list of resources at his disposal and is backed up by a line of regular ERA Forum contributors. The ERA is there to help when you need it.

C.C. BATTERY CO., INC.

TRUSTED QUALITY AND SERVICE SINCE 1923

WANT IT BRAND NEW & OEM?

WE'RE YOUR WAREHOUSE FOR

Prestolite electric · QuickCable · Leece-Neville · C.E. Niehoff & Co. Charging and Power Management Systems · Littelfuse · Cole Hersee · MAHLE Driven by performance · Delco Remy · DENSO · dixie

...& MORE!

REWOUND, REMAN OR NEW?

WE DO THAT, TOO!

ARMATURES ROTORS STATORS

CATERPILLAR CONVERSIONS

D.E. HOUSINGS COMPLETE UNITS

NEED MORE?

WE ALSO STOCK

COMPONENTS DRIVES SOLENOIDS

OR ANYTHING ODDBALL...JUST GIVE US A CALL!

ccbattery@aol.com (800) 531-1038 www.ccbattery.com

3513 Agnes St. Corpus Christi, TX 78405

NEW ERA MEMBER BENEFIT

from

LESTER CATALOG COMPANY

Effective January 1, 2019

Lester Catalog is offering a $100 discount for an annual subscription to ERA members

lestercatalog@waiglobal.com

or call

1-800-877-3340

Contact your customer service representative at WAI Global to request your discount upon purchase or renewal of Lester Catalog

Members Helping Members

Have you seen this ERA label?

This 1.5" x 3" tough waterproof vinyl label provides space to write or stamp a unit number, your invoice number or date, the units voltage and the unit's amperage. This 2-part label comes with a self-adhesive cover sheet to preserve your unit info.

These attractive labels are affordably priced and can be ordered today by calling the ERA office at **(636) 584-7400.**

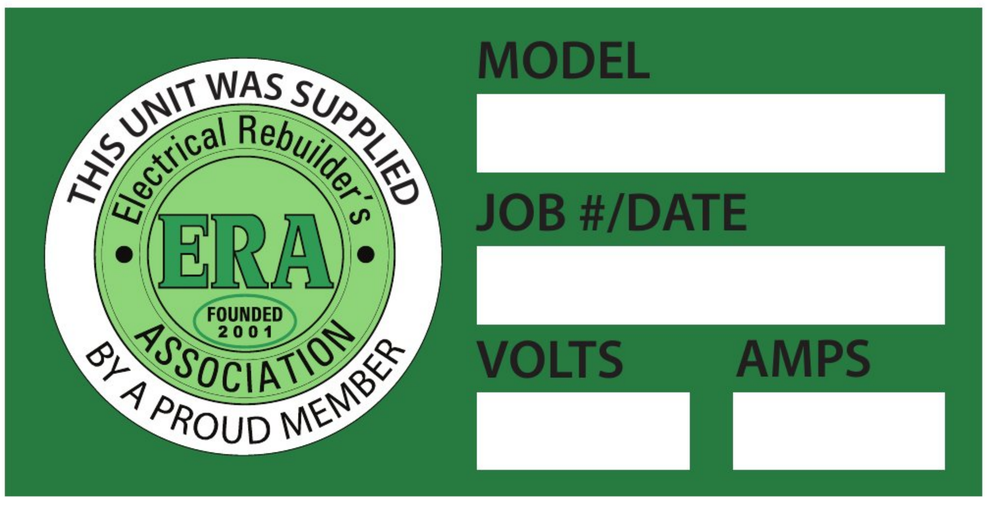

REBUILDER'S MARKETPLACE

PARTS, SUPPLIES, EQUIPMENT FOR SALE

Vintage starter and generator field coils. Ace, Autolite, IPM, Preferred Electric and Vulcan part numbers. Listed in Excel spread sheet to send via email. Call 860-528-8174 or email ken@guyselectric.com

---

Battery charger repair parts for all brands, batteries and battery chargers for all applications. PLP Battery Supply 800-642-3451 www.plpbattery.com

---

WANTED rebuildable Military electrical cores, any quantity, Prestolite 60 amp alts, Leece Neville 24V starters, CE Niehoff 24V alternators, Bendix 650 amp oil cooled alts, 300 amp Teledyne generators, any quantity, send your list or if not sure send pictures, and we can identify. 305-633-1524 or hy@cmearma.com

---

Selling a used Jimco brand test bench for starters, alternators and generators. Call 815-747-6110

3500 AND 3599 CORES. Contact Larry at Hagemeister Enterprises. 800-944-0494

For sale lots of cores heavy duty, industrial, agricultural and import. Call with OE or Lester numbers 314-664-2101

Do you have any surplus tools, equipment or parts that you don't need and would like to sell? As an ERA member, you can list up to 25 words for free right here. It is just one of many ERA membership benefits.

For Sale; Crumbliss model 2105 Alternator, Generator Test Bench. 5 HP 230 V. single phase, electronic variable speed drive, very good condition. Call 574-862-3910

Selling Used Crumbliss Model# 2482 Starter Tester With Crumbliss Model#2487 12-24v Converter With Stand. Used Kar Model# 280m 6-32v Alternator Tester With Cabinet 330-535-6269

For sale over 1,200 of our remanufactured and some new starters, alternators, generators. Domestic and Import. Automotive, Truck, Agricultural, Marine And Industrial Applications (330) 535-6269

BUSINESS FOR SALE

Complete starter and alternator rebuilding business w/house, shop and barn on two acres in the country. Well established with loyal clientele. $210k (920-566-2723)

Need technical help with an alternator that won't charge or a starter that won't crank? Call **Mohammad Samii** at the ERA Tech Help Line - **636-584-TECH (8324).**

After 40 years Owner Retiring. Complete shop: Equipment, Parts and Stock for sale. Call or E-Mail for list 860-633-8122, Draghi4@Yahoo.com

SERVICES

R&R ALL STARTER DRIVES. North Atlantic Starter Drive, 741 Broadway, Pawtucket, RI 02861 800-822-2735 Email: popsy26@verizon.net

MISCELLANEOUS

United Battery Systems in Portland, Oregon is seeking an experienced Rotating Electrical Rebuilder. Qualified Applicants will have 3 to 5 years' experience rebuilding Alternators, Starter Motors and Generators. Please email a resume to susan@unitedbattery.net to apply for this position.

Partner wanted in great weather Myrtle Beach. Bring your shop or stock too much work here for just me. 50-50 deal 843-455-8062

HIRING: Looking for a change but want to stay in the industry? Join our growing Sales team! Please email info@regitar.com for more information.

Would you like to know what other members think about a particular issue related to your rebuilding business? Go the the ERA's website – **electricalrebuilders.org** and check out the ERA Forums.

Experienced rebuilder needed for high volume auto electrical shop to rebuild starters and alternators in sunny, St. Petersburg, Florida. Have a career, not just a job. Call Tony at 727-522-7420, fax 727-528-8823 or email superstreet1964@gmail.com

ADVERTISING: If you'd like to submit a classified ad, email Stephanie at smsdesigns@hotmail.com. ERA members receive the first 25 words free. It's an ERA benefit!





ERA EXCHANGE
PO Box 906
Union, MO 63084
CHANGE SERVICE REQUESTED

PRSRT STD
U.S. Postage
PAID
Permit No. 137
Washington, MO
63090

JAN. 2021

NEED HELP? It's just a phone call away. 1-636-584-TECH (8324)



The ERA ... We've Got It All Online For You!

Books • Forums • JIMCO Manuals • Wiring Diagrams
DVDs • Technical Library • Training Videos • Supplier Sources
Equipment Manuals • Forms • ERA Exchange

WE'RE HERE FOR YOU 24/7
www.electricalrebuilders.org

REGITAR USA

Automotive Electronics & Power Tools & TPMS

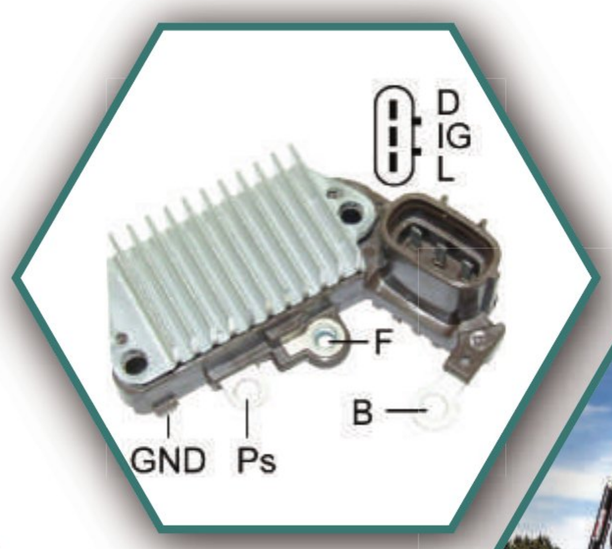







Contact us for this new **Voltage Regulator** covering Bobcat Kubota late model applications.
You can now order our Products online!

We are a **Manufacturer** and provide **Technical Support** on all our Products!

VRH2005-2490
Ref #: 126000-2490, 12337

Performs like OE used on Bobcat Skid Steer Loader
MT52 Kubota D722-E3B Dsl (2004-2009)
MT55 Kubota D902-E3B Dsl (2005-2013)

and earlier models of Bobcat Compact Excavator and Bobcat Excavator Kubota's and Facelift Kubota's.

www.regitar.com

REGITAR USA, Inc | 2575 Container Drive | Montgomery, AL 36109 | Toll Free: 1.877.REGITAR | info@regitar.com