ERA EXCHANGE

YOUR GUIDE TO ELECTRICAL REBUILDING

July 2024 $12.95

A WORD FROM THE EXECUTIVE DIRECTOR
Remember When?

AUTO ELECTRIC CORNER
Winch Motors, AG and LIN, RVC Revisited

A WORD FROM THE EXECUTIVE DIRECTOR
Remember When?



IPM, ACE, Renard, Dubois, Cargo, Accurate, Ennis, Marc's One, Van Bergen & Greener, Vensel, Wilson were all names of supplier companies that most of us did business with. They are all gone but we're still here! This industry keeps evolving with mergers and suppliers closing.

The ERA office gets quite a few calls from rebuilders looking for parts and pieces they cannot find! This is the new normal for doing business in this industry today. Not to discredit any of our current suppliers as many of them are trying to re-position themselves in the marketplace, adding or enlarging locations, websites and product lines.

We all spend much of our day sourcing parts and units. Add another twist to the equation, every one of us knows at least one rebuilder near them that has closed their doors which should equate to more and better business for us, but it also eats up our time, taking care of new customers!

Where am I going with all this?

The ERA, as an organization, is looked upon to provide all the assistance you need to solve all your problems! We do make significant efforts to do just that! We have and maintain a huge website to store all the technical info we write and publish in the Exchange magazine as well as maintaining a current member directory of suppliers and rebuilders all over North America! A commonly overlooked feature of the website is the Forums section, this provides a quick means of communication if you're looking for rare parts or units, many members monitor these forums daily. If you're not so tech savvy, every month you get a copy of this magazine, it is filled with suppliers that are spending money advertising their business, take the time to read the ads and patronize them by purchasing their products!

Lastly, the largest resource for finding parts and products is the ERA Annual Tradeshow! Nearly every supplier left in our industry exhibits at the tradeshow. It deeply saddens me and the board of directors, **not to see all of our members at this show every year!** Just as our parents would scold us for not doing something right, I am going to scold each one of you that don't attend these shows each year! There is no excuse shy of being in ill health that should keep you away! Ask anyone of the members that attend every year, they will agree that this is the greatest place to network with other rebuilders and seek out the suppliers that have the products that you need! We all will also agree that attending the show doesn't cost us money, it makes us money! The knowledge gained at these shows is invaluable! So, if you can't find the parts you're looking for, first ask yourself, did I really give all my effort to be the best, most knowledgeable rebuilder I can be by attending the tradeshow?

Mike Schroeder

ERA EXCHANGE
Volume 41 Number 8
July 2024
Published monthly by the
Electrical Rebuilder's Association
PO Box 906
Union, MO 63084
Phone 636-584-7400
office@electricalrebuilders.org

EDITORIAL ASSISTANT / Bob Thomas

DESIGN & PRODUCTION / Stephanie Schroeder

CONTRIBUTING WRITERS / Mike Schroeder, Mohammad Samii

CONTENTS

2 A WORD FROM THE EXECUTIVE DIRECTOR
2 NEW ERA MEMBERS
4 AUTO ELECTRIC CORNER — Winch Motors, AG and LIN, RVC Revisited
15 CLASSIFIED ADS

Copyright 2024 • Printed in the United States

The publisher retains the right to edit for content, style or space. All submissions become the property of the ERA Exchange. Opinions expressed herein of contributing authors do not necessarily reflect the opinion of the staff or policy of the ERA Exchange. All advertisers herein warrant that they are duly authorized to engage in the business described by them when applying for advertising and further warrant they are duly authorized to use any copy, illustration and any trademarks or trade names which may be specified for use in their ad. The ERA Exchange limits its liability due to production errors or omissions to the running of a correction in the next issue.

Rebuilding is Recycling!

INDUSTRY NEWS

& ANNOUNCEMENTS

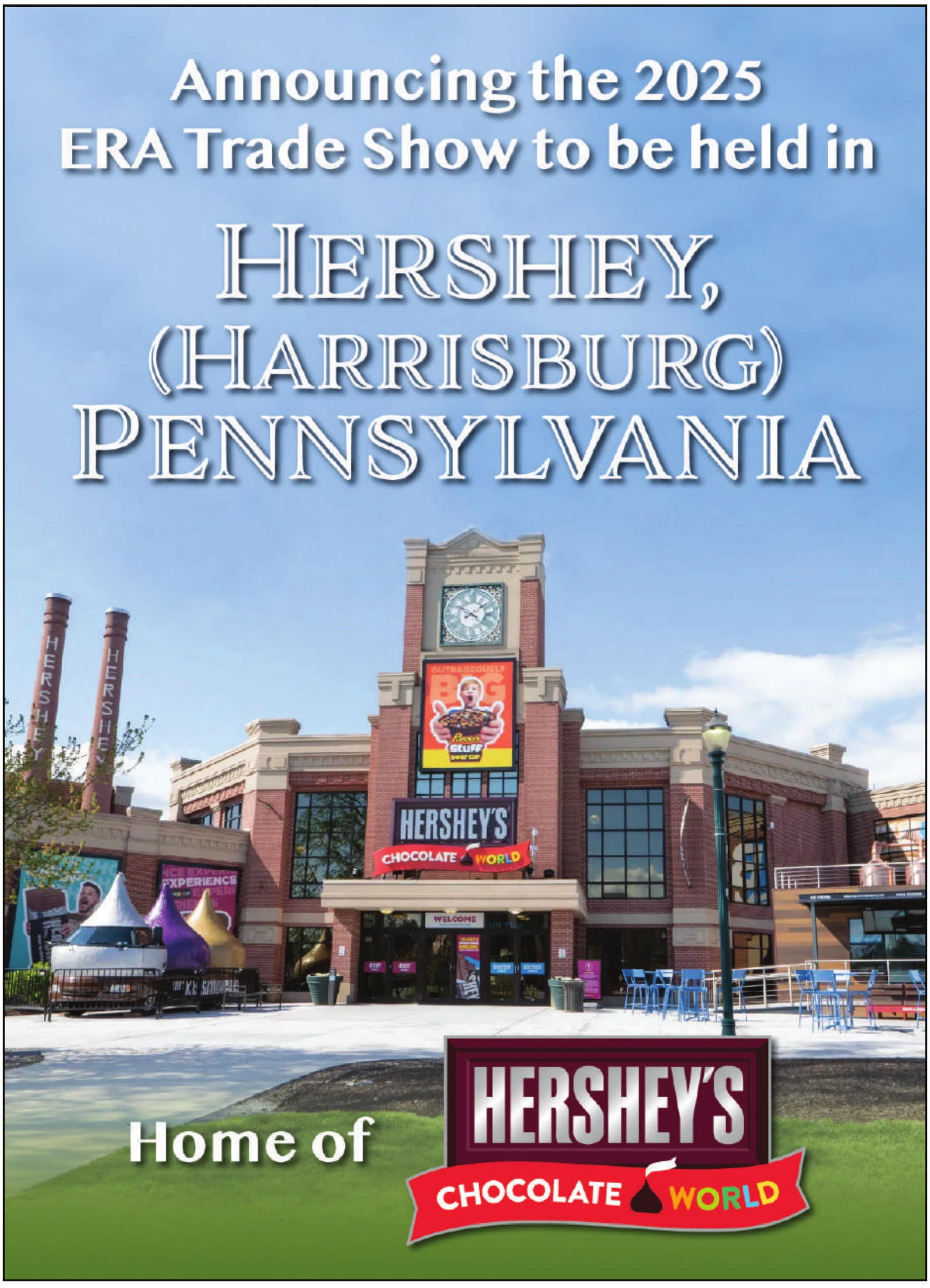

AUTO ELECTRIC CORNER —
Winch Motors, AG and LIN, RVC Revisited



BY MOHAMMAD SAMII

Prestolite 3-post reversible winch motors such as MBJ-4201 (*Figure-1*) have been around for a long time and have been used in many applications. Operated by either 2 double-throw or 4 single-throw solenoids, they were and still are the workhorses used for many types of winches and other such applications.

Although we were then able to rebuild them since new field coils and rewound armatures were readily available, but back in the mid 70's and early 80's, a new OE motor if needed would cost about $450 or so, which equals to roughly $1400 these days adjusted for the inflation. That amount can probably buy 10 such new aftermarket motors these days…!

The 3-posts marked "F1", "F2" and "A" and a special way of connecting sequence allowed the motor to be reversible. The "A" post is a common point but if "F1" gets power and "F2" connects to "A", the motor will turn clockwise. The same way if "F2" gets power and "A" connects to "F1", the motor will turn counter-clockwise. A simple arrangement of their field and the posts is shown in *Figure-2*.

The more recent motors such as MBJ-6302 have their 3 posts in tandem as shown in *Figure-3*. The sequence of connections for proper function are exactly as the same as the earlier one with post in a triangular fashion.

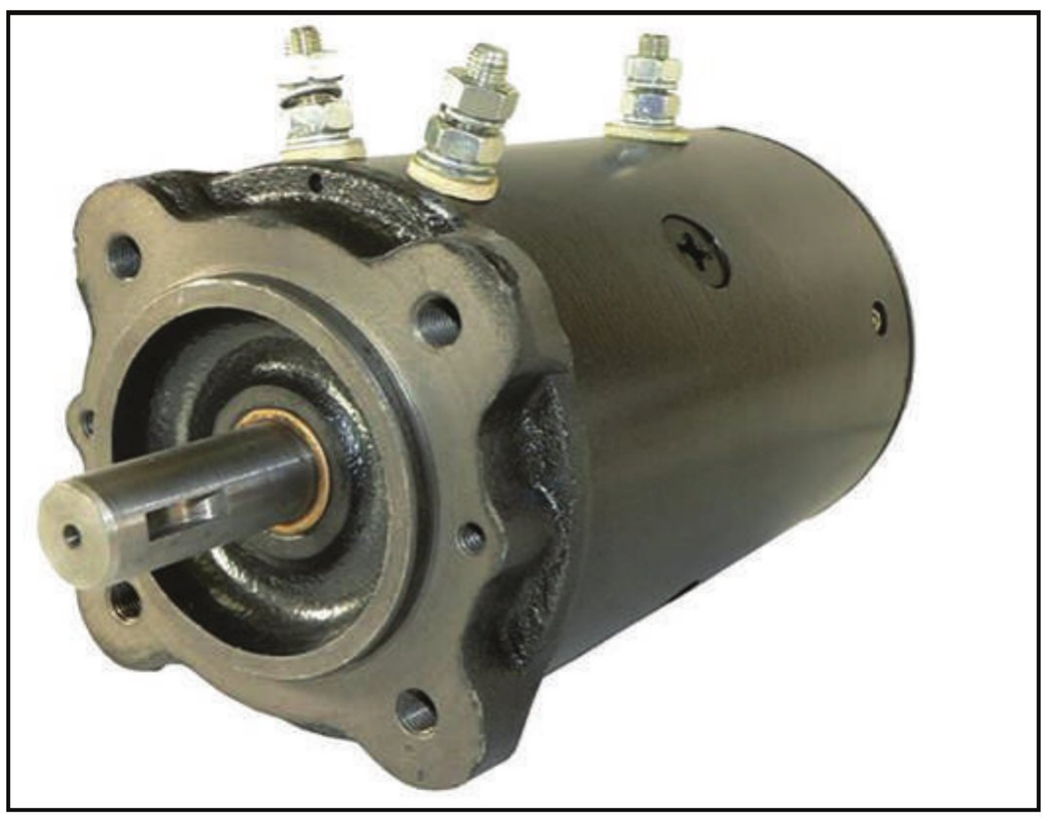

Figure 1 – A Typical 3-Post Winch Motor

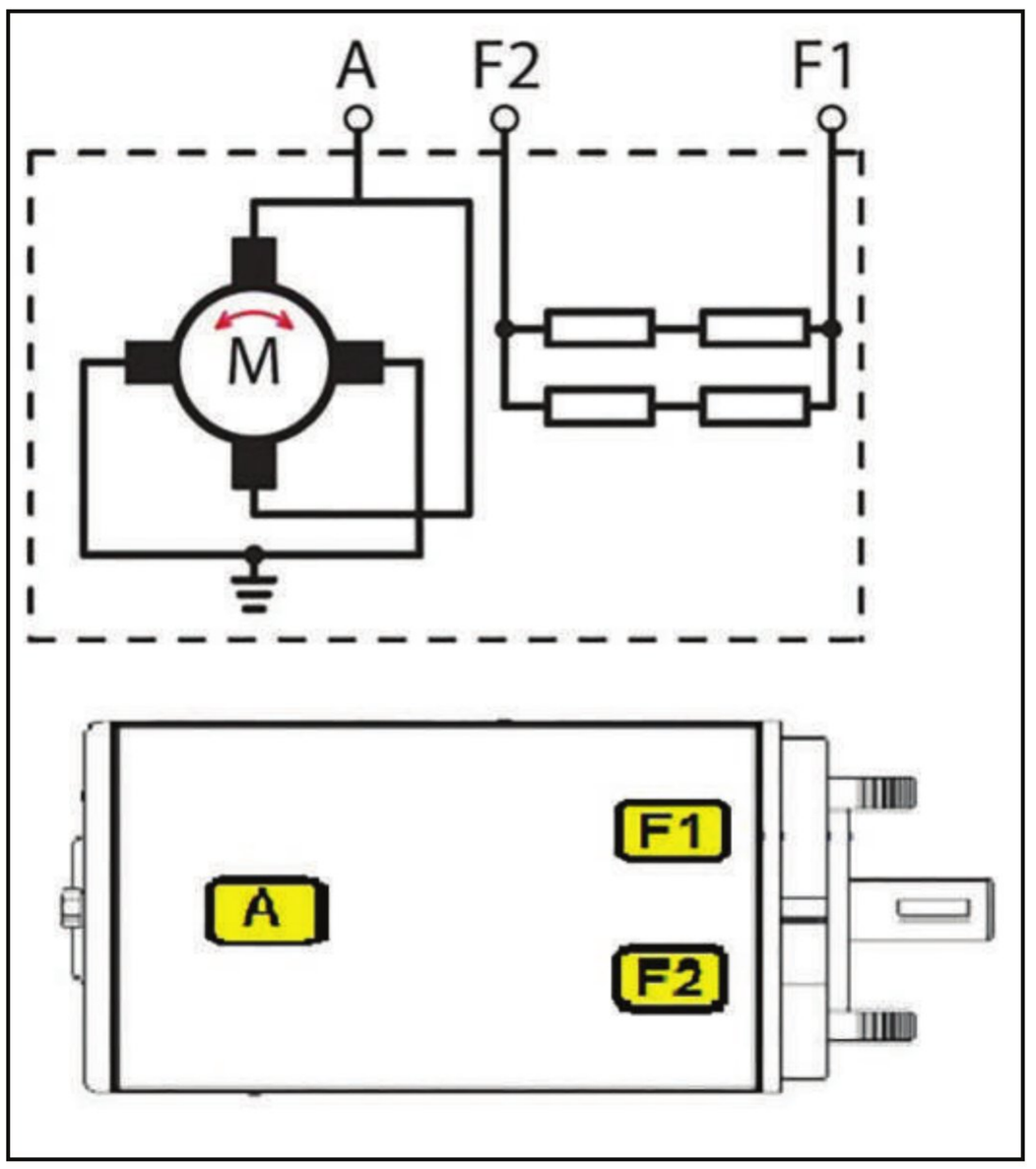

Figure 2 – Field and Posts Arrangement

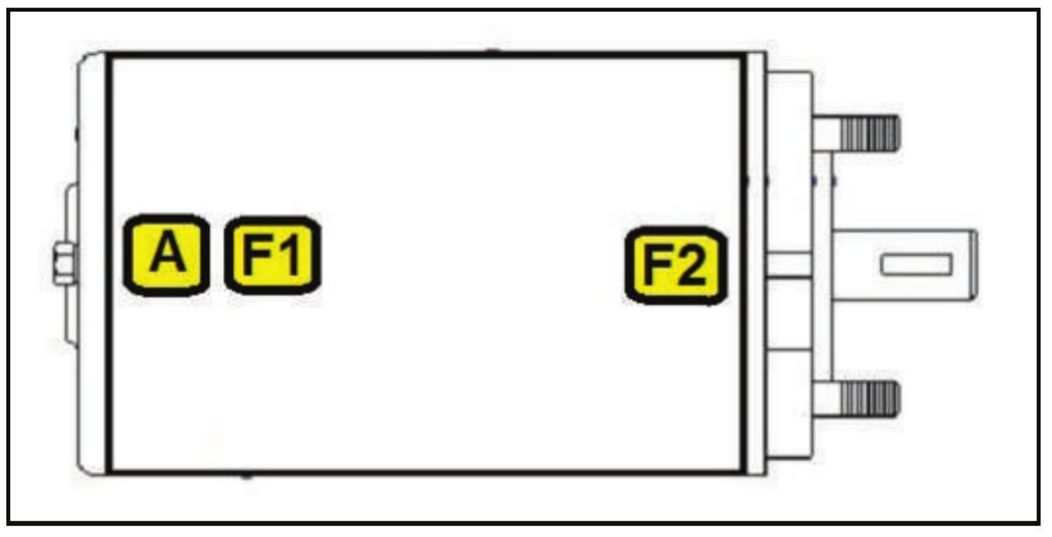

Figure 3 – MBJ-6302 Winch Motor with Tandem Posts

C.C. BATTERY CO., INC.
TRUSTED QUALITY AND SERVICE SINCE 1923
WANT IT BRAND NEW & OEM?
WE'RE YOUR WAREHOUSE FOR
Prestolite electric
QUICKCABLE
Leece-Neville
C.E. Niehoff & Co.
Charging and Power Management Systems
Littelfuse
Cole Hersee
MAHLE
Driven by performance
Delco Remy
DENSO
dixie
...& MORE!
REWOUND, REMAN OR NEW?
WE DO THAT, TOO!
ARMATURES ROTORS STATORS
CATERPILLAR CONVERSIONS
D.E. HOUSINGS COMPLETE UNITS
NEED MORE?
WE ALSO STOCK
COMPONENTS DRIVES SOLENOIDS
OR ANYTHING ODDBALL...JUST GIVE US A CALL!
ccbattery@aol.com
(800) 531-1038
www.ccbattery.com
3513 Agnes St. Corpus Christi, TX 78405

There is also this aftermarket motor with posts in tandem but not is the same order of a common MBJ-6302 shown above. The post are in a different order as a side-by-side comparison can be seen in *Figure-4*. I am not sure if this is only an aftermarket replacement or there are actually OE motors made with this arrangement, but this motor that is shown in J&N as 430-20097 is the one with post in a different order.



Figure 4 – A Comparison between Two Motor Types

We have a customer that uses a lot of winch motors and if we replace one of their motor with the J&N one (as an example), I have to work with their technicians to wire it up properly otherwise it will not work. It also should be noted there are such motors with 4 post, on which the 4th post is underneath the motor and used as a Negative. These 4-post motors are isolated from the case and do indeed need the 4th post connected to battery Negative to operate.

AG and LIN…!

In the calls on the ERA Help-Line or sometimes during a conversation when responding to a related testing question, I ask a fellow rebuilder if he is equipped to test the later model alternators that have COM terminal and work in a LIN network environment. The answer is often a NO…! And then they try to explain they only work on Industrial units or mostly AG, thus they do not have a need for a LIN-capable test box.

Well, just like many other area that the technology does not stop from evolving, electrical rebuilding is not immune to the proliferation of advanced technology. Just like your simple refrigerator or household washer and dryer that were simple to operate, now the fully electronic touch screened, WiFi-capable, and environmentally conscious such devices, have a set-up procedure which requires a learning curve to master its operation.



Romaine Electric
PRECISION PRODUCTS

USA Units Available NOW!

Premium USA Armatures & Other Components Also Available!



Search "USA" on our website to see the Full Selection!

- Alternators
- Starters
- Components
- Lighting
- Accessories

16 Locations Call Today!

Kent, WA (HQ) 1-800-426-5005	**Wenatchee, WA** 1-800-690-8150	**Chula Vista, CA** 1-800-541-8307	**Winchester, VA** 1-833-994-1251
Everett, WA 1-800-784-0443	**Spokane Valley, WA** 1-800-635-8848	**Salt Lake City, UT** 1-800-690-8150	**Fond du Lac, WI** 1-800-236-2701
Tacoma, WA 1-800-924-0279	**Portland, OR** 1-800-547-0361	**Irving, TX** 1-866-434-2782	**Appleton, WI** 1-800-236-2702
Seattle, WA 1-800-873-3526	**Newcastle, CA** 1-800-626-0100	**N Kansas City, MO** 1-866-770-8688	**Cincinnati, OH** 1-800-837-4878

ROMAINE EZ-CONNECT™

Get Connected
Romaineelectric.com

®2024 Romaine Electric, All Rights Reserved. Trademarks used herein are the property of their respective owners.

Just like the household stuff, the Local Interconnected Network (LIN) that's operates most new alternators is no longer restricted to high-end automotive application and has found its way into industrial and specially AG application. There is no way of shying away from it, and as the years go by, more and more AG units will require a LIN-capable test box to run them on the test bench.



Figure 5 – Bosch John Deere LIN Alternator

One recent example of this was a Bosch alternator from a John Deere 6155R tractor that the Crop Science Department of our local university (University of Illinois or U of I) sent in to be tested and repaired (*Figure-5*). Since I did not have any previous experience with said alternator, a search in various websites, particularly Wagner showed this JD AL210426 alternator (Bosch 0-124-625-091) to be—much to my surprise— a LIN alternator used on said tractor.

I tested it with my test box as a COM alternator which was confirmed this alternator was running on a LIN 1.3 protocol (*Figure-6*). The issue with it was excessive dirt common to such AG units and bearing noise, but the regulator was working fine with plenty of brush length left.



Figure 6 – Data Capture of John Deere Alternator

HI TORQUE IMI Performance Products, Inc.®

WWW.HITORQUE.COM

The Highest Quality
Gear Reduction Starter Motors
On The Market!

SCAN ME

MADE IN THE U.S.A.

IMI-241-015



1.4kW

Wisconsin Applications
Lester# 5494, 5495, 5789, 5219, 5669
Prestolite# 46-910, 46-911, MBG4141, MBG4140, MBG4118, MBG4109, MBG4024, MHA6102, MHA7021
Hyster# 0181785
Clark# 6513373 & 6632567

IMI-25009-003



2.7kW

International & Farmall Applications
Lester# 17308, 4193, 4524, 4594
Delco# 1107564, 1107744, 1107543, 1108657

IMI-231-001



1.2kW

Yanmar Marine Applications
Lester# 18209
Hitachi# S114-303
Yanmar# 128170-77010, 128170-77010D, 428170-77010

AUTO ELECTRIC CORNER

So the bearings were changed and some clean up and polishing the rotor was all was needed to have this unit put back into service. The lesson learned was the fact that the COM regulators which communicate with PCM on a LIN bus are not limited to automotive applications and I'm sure we will see more examples of this as time goes by and AG/Industrial units become a lot more sophisticated.

RVC Follies…!

Regulated Voltage Control or RVC has been with us since 2005 and is the most common type of charging system used on GM application in cars, light trucks, SUVs and such. However some changes has been added to the system, but the basics of RVC has not changed that much.

There are a few articles regarding this system on the ERA website under Technical Documents, thus I would not go into details of the system. But I will share a recent issue with this pristine 2006 Buick Lucerne with only 45,000 miles on the odometer owned by a retired couple. They claimed since they own a newer vehicle, they consider this one as their spare and seldom drive it, and I can keep it as long as necessary to fix it.

Since the diagnosis became interesting, I am hoping by showing the scope captures of the system when working in "Normal" or in "Default", and effects of Battery Current Sensor on the system, it would give a better understanding as how the system actually works.

The issue was that the BAT light would come on and the system would go into default mode, charged at about

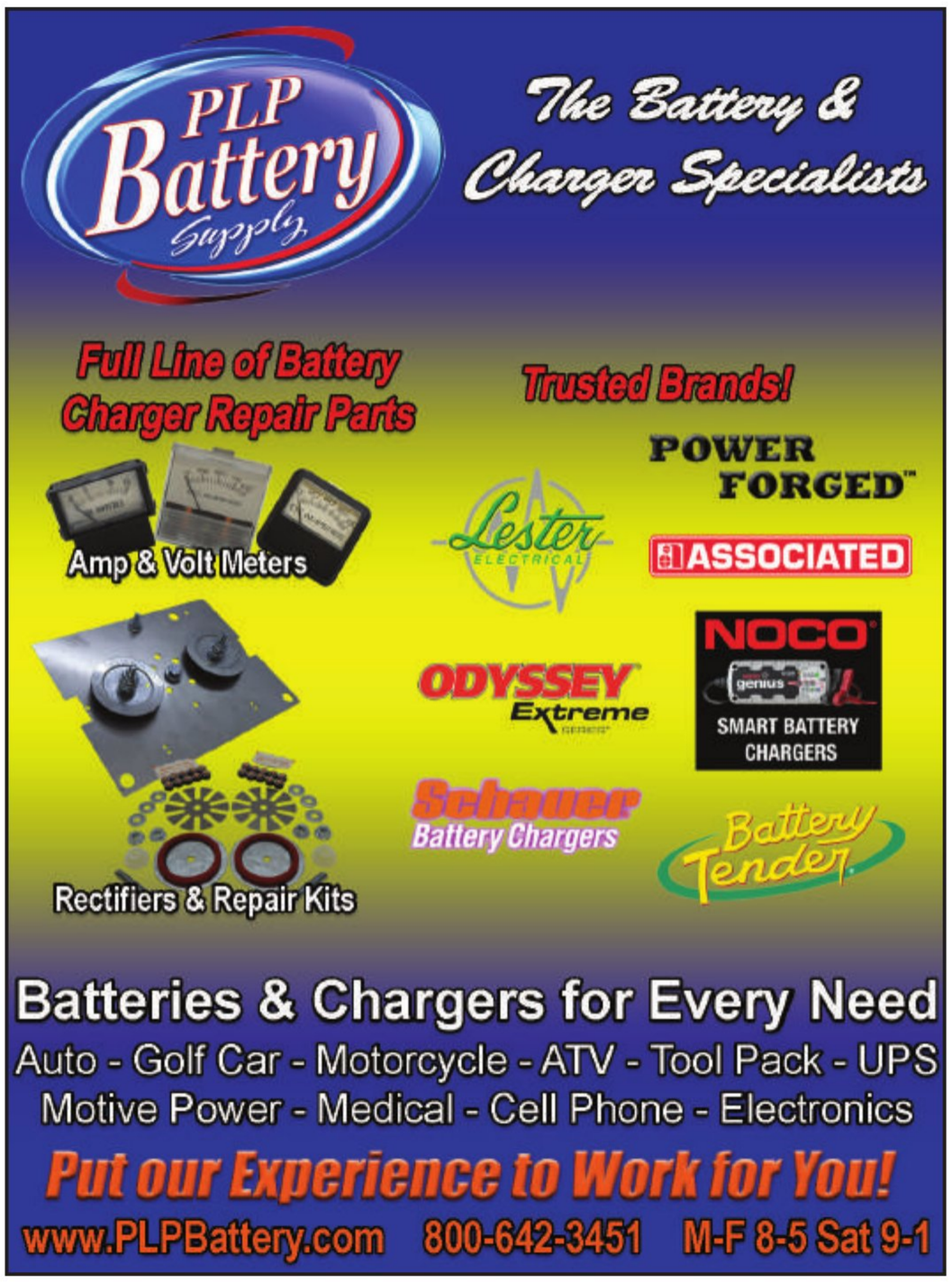

ONLINE CATALOG

PARTREF.com

50,000 Rotating Electrical Units

Lookup by Vehicle App, Part # or Attribute
Includes Product, Bills of Material, Specs & more

Offered FREE to ERA members accessed through ElectricalRebuilders.org

Non-Members who want access, please use contact info below

YouTech Group LLC

(866) 285-1292 • dennis@youtechgroup.com

Have you seen this ERA label?

This 1.5" x 3" tough waterproof vinyl label provides space to write or stamp a unit number, your invoice number or date, the units voltage and the unit's amperage. This 2-part label comes with a self-adhesive cover sheet to preserve your unit info.

These attractive labels are affordably priced and can be ordered today by calling the ERA office at **(636) 584-7400.**

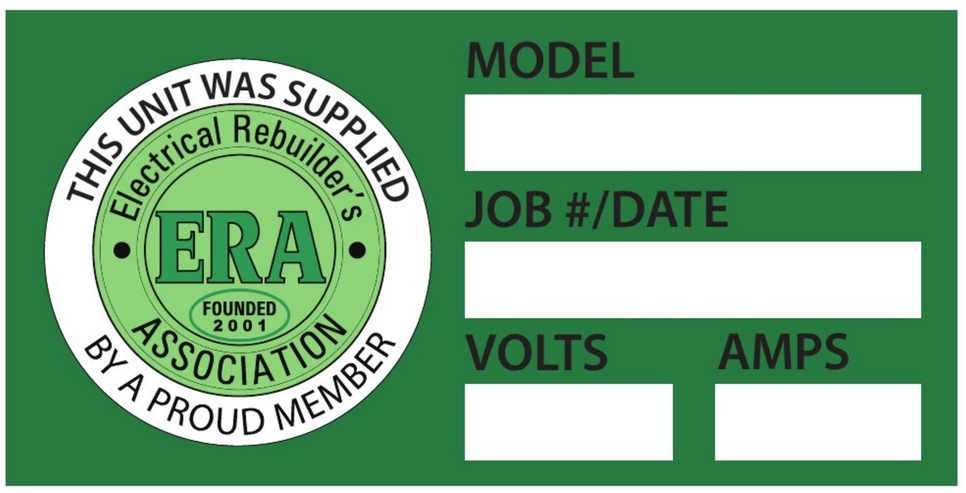

13.7 volt. This by itself would not have made much of a difference to the operation of the car and their use, given it was barely driven, but they wanted it to be right and reliable when needed.

I started with the alternator. It was an easy removal and I wanted to look into it for obvious defects. As you and I can expect, 45K miles on a Denso hairpin alternator on a very clean car would not cause any noticeable wear. The alternator was run on our test bench, and also on the car after installation with our test box to confirm it was functioning perfectly, both on the test bench and on the vehicle.

Next step was to look into trouble codes to see if any are present. A P0622 existed that mostly means the "F" which is the feedback has an issue. Clearing the code would not hold, and it would pop up again as soon as the engine started that made the system to run in "Default" mode.

It was time to look at the signal at the alternator to see what they looked like and what could be the problem.

Let me digress here and show you a little test connector I have made for testing GM's RVC signal (*Figure-7*). This adapter eliminated probing the wires. It simply connects between the alternator and the car wiring, allowing easy access to "F" and "L" wires without any piercing. It also allows easy scope connection to the tabs made into this test connector to get to the "L" and "F" lines.

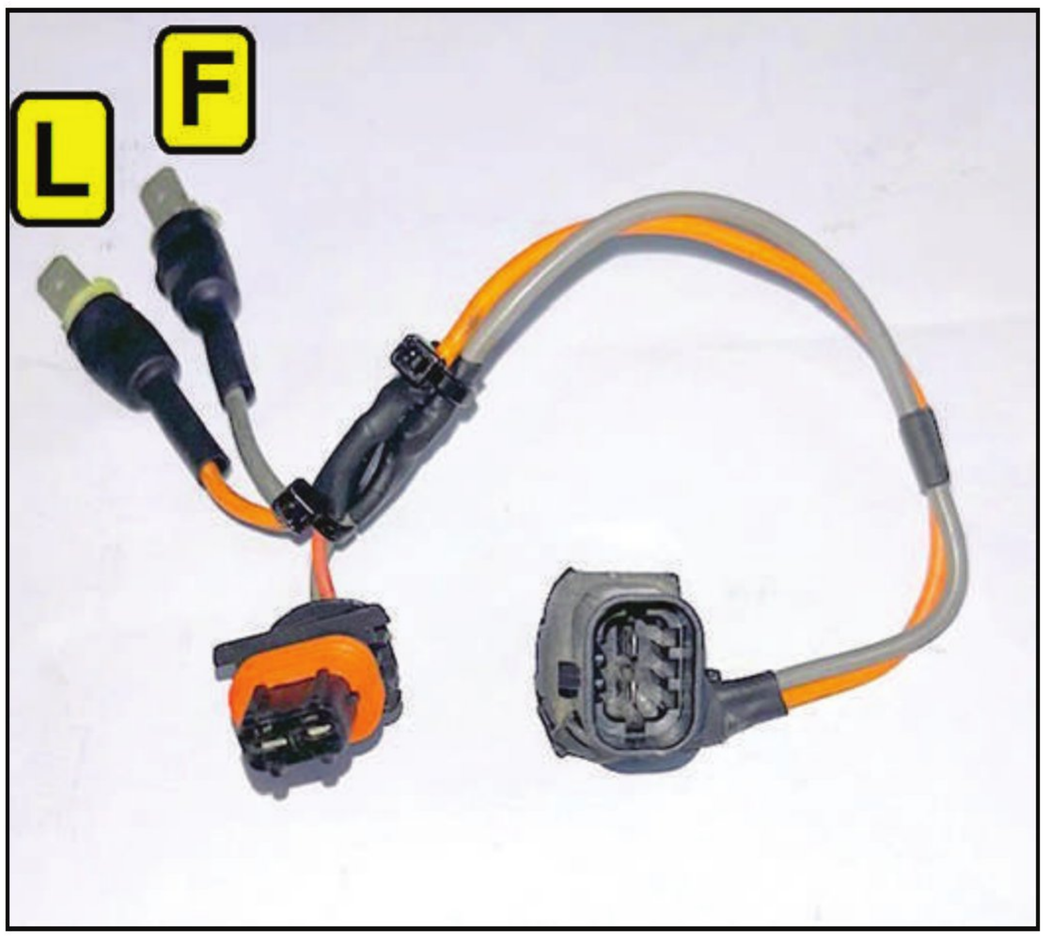

Figure 7 – My Home-made Connector for RVC Testing

Scoping the system actually showed the "F" terminal output is alive and well but the "L" terminal, which is a 128 Hz signal from the PCM to the regulator, was flat lined. The reason for this anomaly is to consider that 2006 was the second year of RVC's existence and not all the reporting and trouble codes were all incorporated into the early PCM's software. My scan tool did not



PFI Bearings

American
Engineering
Inside







Experts in Electric Bearings Technology

We make rebuilding alternators and starter motors easy for remanufacturers and auto electricians.

Rebuild kits for Tesla Drive Units and Air Compressors.

Large inventory in stock to support your remanufacturing business.

Unmatched bearing performance, specially designed for automotive electrical applications.

Visit & Contact Us

pfibearings.com

+1 (567)-661-0806

MEMBER OF ERA ASSOCIATION FOUNDED 2001

PFI Group Inc.
8079 Wales Rd, Northwood, OH
43619, USA

FERSAGROUP

even find a PID for "L" terminal and could not confirm the fact that the reported "F" terminal trouble code (PO622) was erroneous, as the "F" terminal output was alive and well according to the scope capture and on the scan tool. (*Figure-8*)

Another related code (in the BCM) was a B1516 with indicated issues with the battery current sensor (*Figure-9*). This device surrounds the battery negative cable and reports the current passing through the battery (in and out) so the PCM can adjust the pulse width of the "L" terminal to control the charging rate based on PCM's imbedded program for RVC. (*Figure-10*)

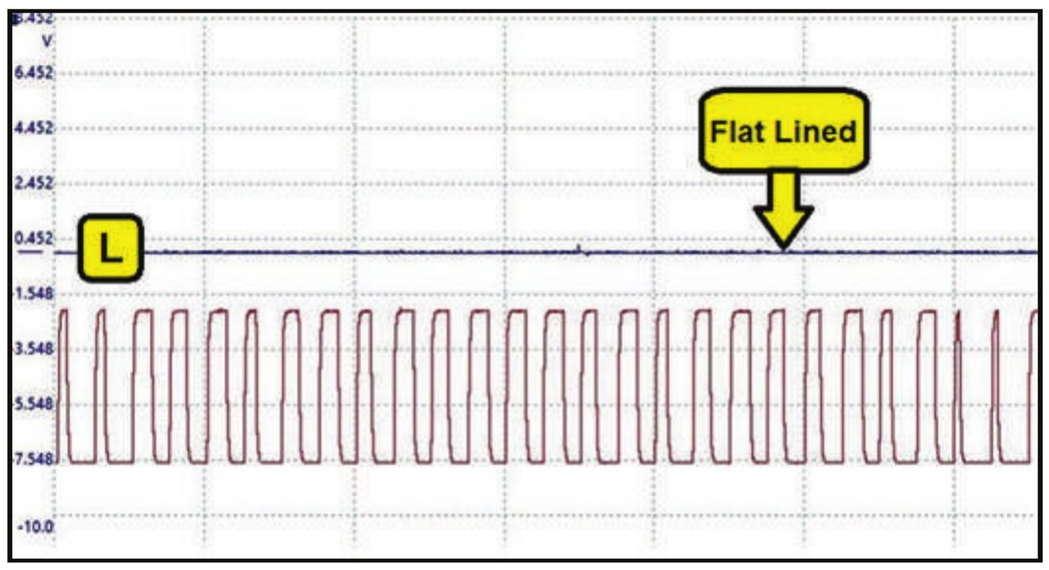

Figure 8 – Flat Lined "L" Terminal



Figure 9 – The Battery Current Sensor

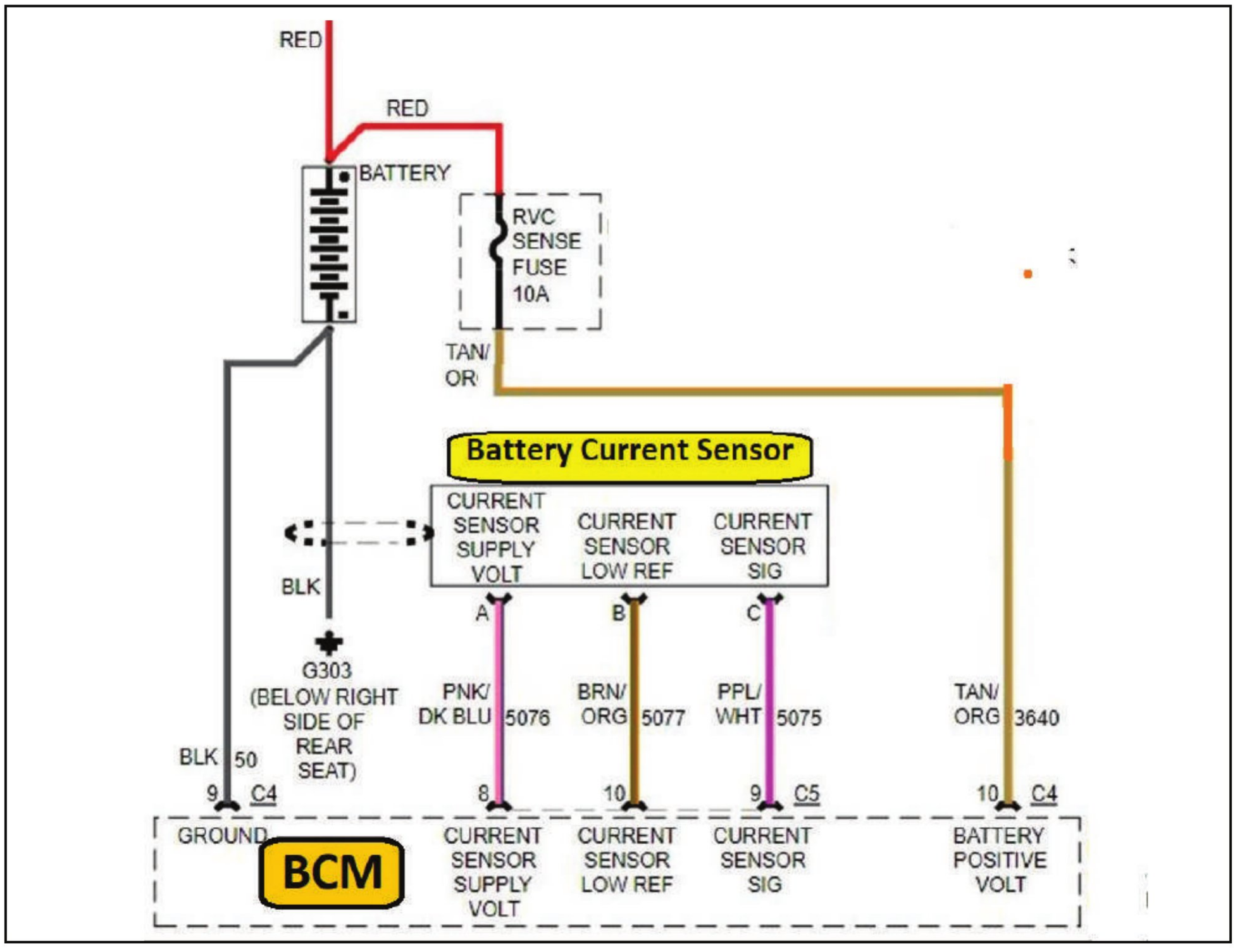

Figure 10 – Battery Current Sensor Interconnection to BCM

Since this is not an expensive part (*Figure-11*), I ordered and got one from the dealer, but this did not solve the problem of BAT light staying on. Using a borrowed Autel MS906-Pro scanner which is more up-to-date and capable than mine for more detailed testing, it indicated a code described as: *"Battery current sensor performance, wrong mounting position"* …!



Figure 11 – The Actual Battery Current Sensor

This was surprising as we had installed the new sensor exactly like it was on the car, but obviously unbeknownst to us, it had been installed backward sometime during a service or battery change, and that seemed to be the problem. Once it was installed at the right direction, the "L" terminal signal became alive and the BAT light went off. (*Figure-12*)

There are other issues regarding the RVC and low battery where excessive voltage drops during cranking reset the BCM which then requires to be updated with a newer program, but that is a story for another time.

Well, that's all for this issue. Until I see you again, keep up the good work and remain healthy.

You can contact Mohammad Samii by email at: sammyselectric@sbcglobal.net, or by calling the ERA Tech Help Line at 636-584-8324.

Figure 12 – "L" and "F" Lines Active, "NORMAL" Mode



Keep your EXCHANGE magazines organized!

Protective binders now available!

$20.00 plus shipping

Holds 12 issues

Call the ERA Office to Order 636-584-7400

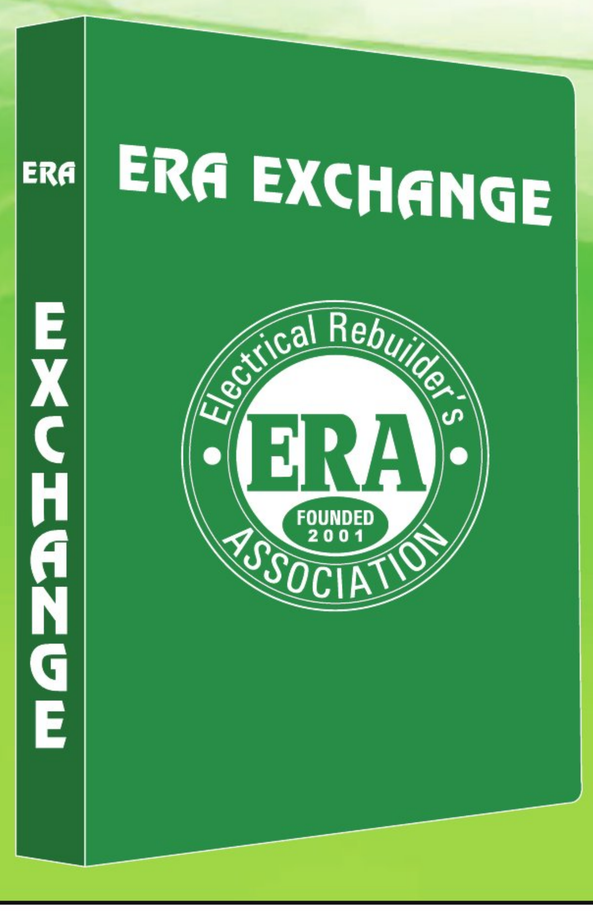

NOW AVAILABLE!

Custom Engraved Powder Coated Cups!

$25 + shipping

Your Choice
15oz coffee mug
or
20oz tumbler
(closeable lid for $5 more)

Call the ERA Office to Order 636-584-7400



NEED HELP?
It's just a phone call away

1-636-584-TECH (8324)

Tech Help from Mohammad Samii



Do you need help testing an alternator or getting it to work as it should on a vehicle? Call the ERA Tech Help Line and talk to an industry veteran that has over 40 years of rebuilding and on-car experience. Mohammad Samii can help you to find the answers that you need to solve any rebuilding problem. No question is too difficult. "Sammy" has a formidable list of resources at his disposal and is backed up by a line of regular ERA Forum contributors. The ERA is there to help when you need it.

NEW ERA MEMBER BENEFIT

from

LESTER CATALOG COMPANY

Effective January 1, 2019

Lester Catalog is offering a $100 discount for an annual subscription to ERA members

lestercatalog@waiglobal.com

or call

1-800-877-3340

Contact your customer service representative at WAI Global to request your discount upon purchase or renewal of Lester Catalog

Members Helping Members

ERA REBUILDER UNIT LABELS

All labels are printed in bright color on a heavy heat-resistant stock with high-bond adhesive backing. They are laminated with a clear layer that is resistant to oil, gas and water. They will give your products a professional look that will set them apart from the competition. Labels are affordably priced and can be ordered right off of the ERA website or by calling the ERA office at: 636-584-7400. All prices include free shipping.

REBUILT BY A PROUD MEMBER
Size: 1" diameter
Sold in sheets of 81
$16.00 1 sheet
$13.00 6 sheets or more



WATER DAMAGE MAY VOID WARRANTY
Size: 1.5" x 3.0"
Sold in sheets of 18
$11.00 1 sheet
$9.00 6 sheets or more



DO NOT STRIKE
Size: 1.5" x 3.0"
Sold in sheets of 18
$11.00 1 sheet
$9.00 6 sheets or more

FREE SHIPPING WITHIN THE U.S.



START ONLY FROM SEAT
Size: 1.5" x 3.0"
Sold in sheets of 18
$11.00 1 sheet
$9.00 6 sheets or more

REBUILDER'S MARKETPLACE

PARTS, SUPPLIES, EQUIPMENT FOR SALE

Battery charger repair parts for all brands, batteries and battery chargers for all applications. PLP Battery Supply 800-642-3451 www.plpbattery.com

---

WANTED rebuildable Military electrical cores, any quantity, Prestolite 60 amp alts, Leece Neville 24V starters, CE Niehoff 24V alternators, Bendix 650 amp oil cooled alts, 300 amp Teledyne generators, any quantity, send your list or if not sure send pictures, and we can identify. 305-633-1524 or hy@cmearma.com

---

3500 AND 3599 CORES. Contact Larry at Hagemeister Enterprises. 800-944-0494

Armatures for sale. $80 each plus shipping. Starter Repair 269-625-5400. GAR2116 Lester 4060-878, MAW2128 Lester 5060-1745, MZ2211 Lester 5060-1800, MAW2030 Lester 5060-1970, SM453 Lester 5050-2115

Rebuilt/new armature inventory reduction sale. 1917 $125.00, 2092 $75.00, 1985 $75.00, 2013 $125.00, 2014 $125.00 Select Parts, Inc Sioux City, IA 800-535-8035

---

55 plus magneto cores for sale. Call Keith 931-314-5912 for list of part numbers. Make me an offer

---

Whole remanufactured units for sale at a low price. I am downsizing my shop and liquidating some stock. Visit my website at startersbydon.com 541-902-2255

MISCELLANEOUS

HIRING: Looking for a change but want to stay in the industry? Join our growing Sales team! Please email info@regitar.com for more information.

EXPERIENCED REBUILDER: Kaestner Auto Electric in Waukesha, Wisc. looking for starter, alternator, and generator rebuilder. Emphasis on HD and Industrial. 3-5 years experience required. Send resume to steve.kaestner@yahoo.com.

Position Available! Growing national supplier and manufacturer to the rotating electrical industry is looking for a pricing manager. Full time position with the ability to work from home for the right candidate! Health benefits, 401K and fun and supportive culture. Requirements: Good industry knowledge of starters alternators generators and their markets. Ability to understand and apply pricing with several different strategies to individual market places. Willing to accept new ideas and products as we are diversifying. Ability to work with many people within an organization productively and respectfully. Effective skill with MS Office suite of programs, willing to learn if necessary (school). Salary DOE

I am looking for a VRT-10 regulator tester made by D&V. Email nathan.unger.asi@gmail.com ph 1-604-864-2198

SERVICES

R&R ALL STARTER DRIVES. North Atlantic Starter Drive, 741 Broadway, Pawtucket, RI 02861 800-822-2735 Email: popsy26@verizon.net

BUSINESS FOR SALE

Retiring! WELL ESTABLISHED, turn key starter and Alternator Business in IDAHO. Includes units, parts, equipment, and customer base. Shop and apartment available for lease. idahorebuilder@gmail.com

---

Well established Starter Alternator and Generator, also Torpedo heater repair. In beautiful Western Michigan. Includes building with great location, all inventory and parts. Well established customer base. EXCELLENT Reputation. Will Train. E-Mail frgen17@gmail.com

---

60 year Turn Key Auto/Truck Electric and Heating A/C repair shop in Hartford Connecticut suburb. Includes Units, component parts, equipment, and customer base. 3600 sq. ft., 6 Drive In Bays with Rebuilding & Storage area's. Willing to provide guidance and experience skills to motivated and willing to learn individual.E-Mail K2H24P@cox.net

---

Business for sale. Over 50 year established starter - alternator rebuilder and battery distributor. In Beautiful Southampton Village Long Island. Includes 2000+ new and rebuilt units, batteries, battery related items, accessories, equipment, and component parts. Email jamcostarters@optimum.net

ADVERTISING: **If you'd like to submit a classified ad, email Michele at office@electricalrebuilders.org. ERA members receive the first 25 words free. It's an ERA benefit!**





ERA EXCHANGE
PO Box 906
Union, MO 63084
CHANGE SERVICE REQUESTED

PRSRT STD
U.S. Postage
PAID
Permit No. 137
Washington, MO
63090

JULY 2024

NEED HELP? It's just a phone call away. 1-636-584-TECH (8324)



The ERA ... We've Got It All Online For You!

Books • Forums • JIMCO Manuals • Wiring Diagrams
DVDs • Technical Library • Training Videos • Supplier Sources
Equipment Manuals • Forms • ERA Exchange

WE'RE HERE FOR YOU 24/7
www.electricalrebuilders.org

WAGNER

RED, WHITE & VROOM

ONLINE WEB ORDERING 24/7

BILL OF MATERIAL & APPLICATION LOOKUP

OEM DISTRIBUTOR

USA FAMILY OWNED SINCE 1976

WAGNERALT.COM

TOLL FREE 800-345-5927