R-0

JIMCO

PERMANENT MAGNET ALTERNATOR TYPES

PERMTYPE12

TYPE 12
SINGLE PHASE, FULL WAVE RECTIFICATION
WITH REGULATION AND INSULATED "NO CHARGE" INDICATOR LIGHT

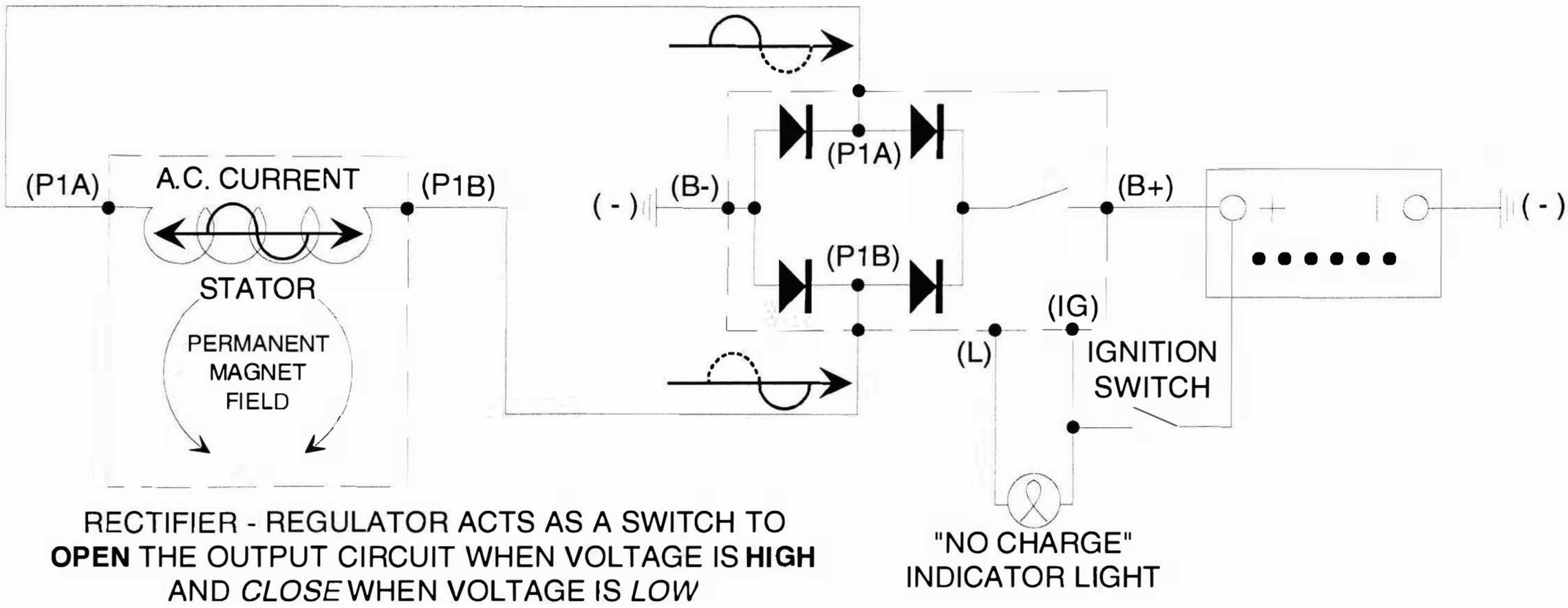

RECTIFIER - REGULATOR ACTS AS A SWITCH TO **OPEN** THE OUTPUT CIRCUIT WHEN VOLTAGE IS **HIGH** AND *CLOSE* WHEN VOLTAGE IS *LOW*

DUCATI

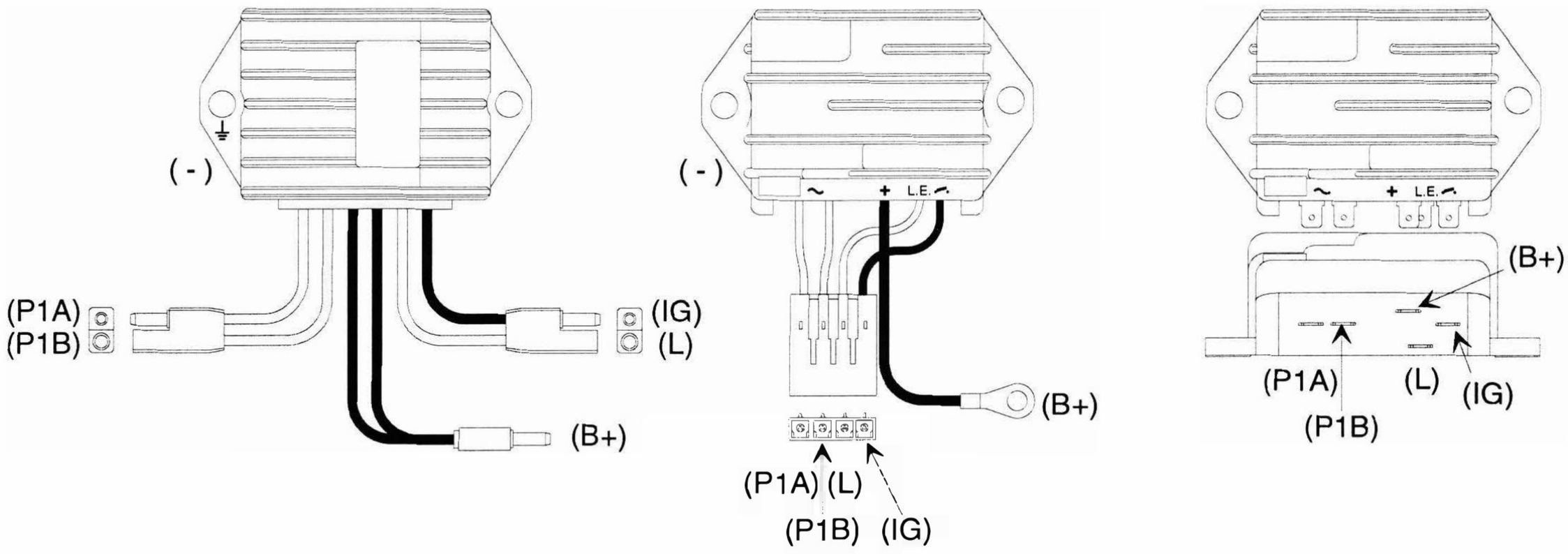

PERMTYPE.DRW 6/01

(c) JIMCO Inc., 2000