R-0

JIMCO

PERMANENT MAGNET ALTERNATOR TYPES

PERMTYPE14

TYPE 14
SINGLE PHASE, FULL WAVE RECTIFICATION
WITH REGULATION, NO BATTERY

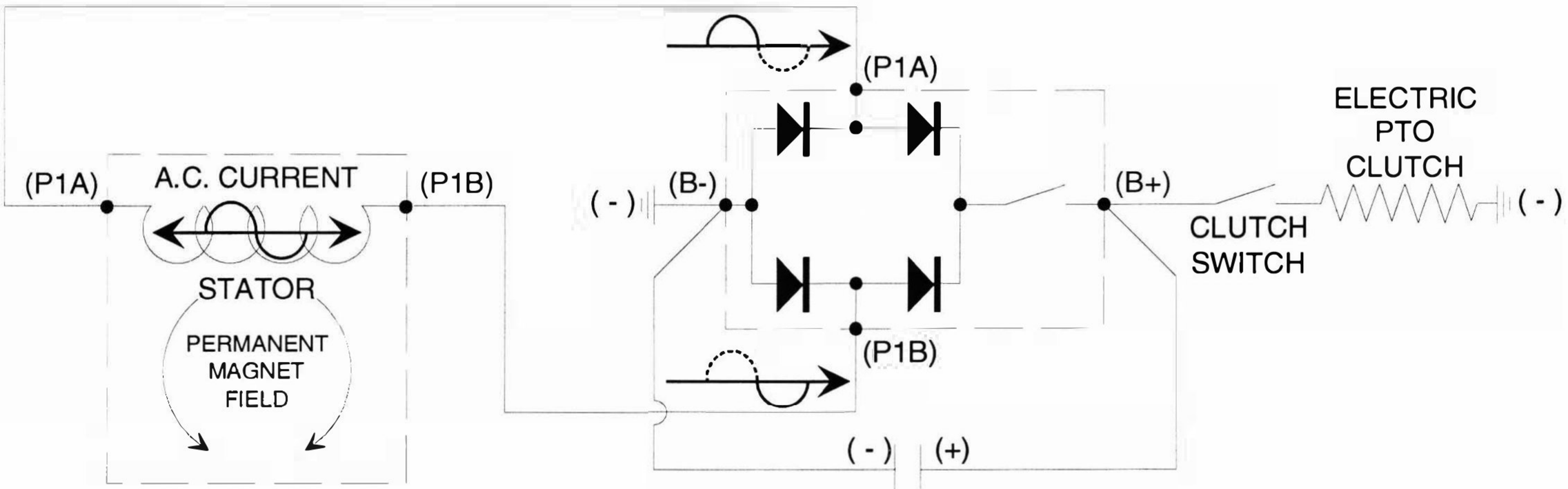

CAPACITOR HELPS STABILIZE
VOLTAGE WHEN A BATTERY IS NOT USED

RECTIFIER - REGULATOR ACTS AS A SWITCH TO
OPEN THE OUTPUT CIRCUIT WHEN VOLTAGE IS **HIGH**
AND *CLOSE* WHEN VOLTAGE IS *LOW*

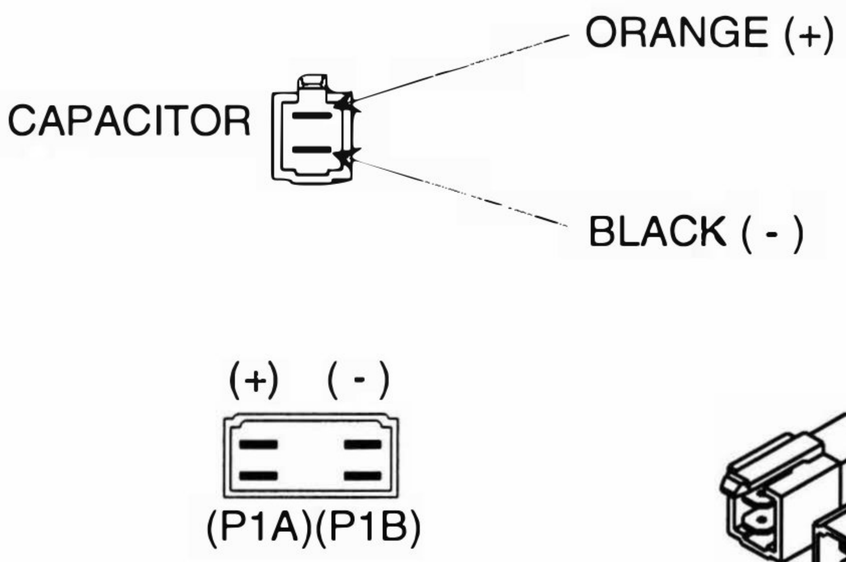

J4850

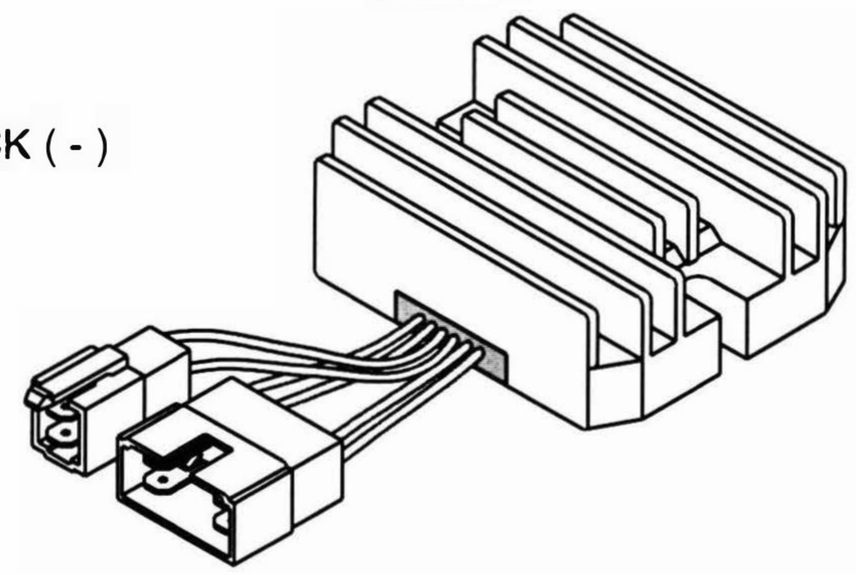

J4850
IS A "CLAMPER"

(c) JIMCO Inc., 2000