JIMCO

PERMANENT MAGNET ALTERNATOR TYPES

PERMTYPE15

TYPE 15
SINGLE PHASE, FULL WAVE RECTIFICATION
WITH "SHUT DOWN" WINDING REGULATION

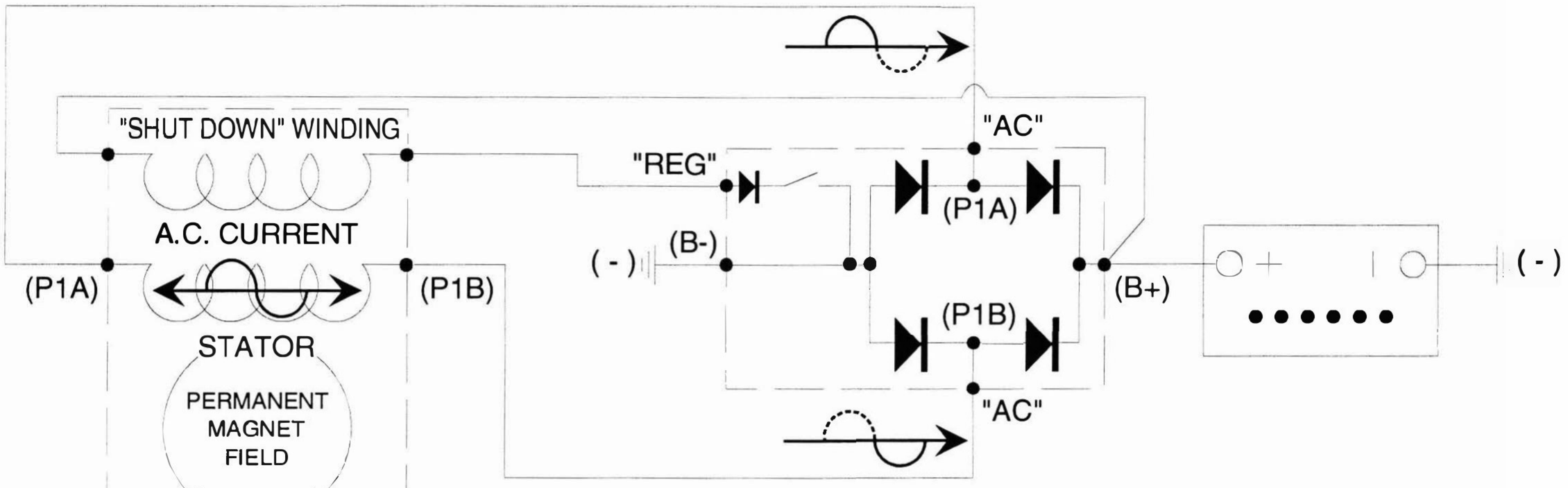

RECTIFIER - REGULATOR ACTS AS A SWITCH TO **GROUND** THE "SHUT DOWN" WINDING WHEN VOLTAGE IS **HIGH** AND *OPEN* THE "SHUT DOWN" WINDING WHEN VOLTAGE IS *LOW*.

THE "SHUT DOWN" WINDING CANCELS THE STATOR WINDING, REDUCING OUTPUT AND THEREFORE CONTROLS VOLTAGE

(c) JIMCO Inc., 2000