TYPE 19
SINGLE PHASE, CENTER-TAP, FULL WAVE RECTIFICATION
WITH REGULATION AND INSULATED "NO CHARGE" INDICATOR LIGHT

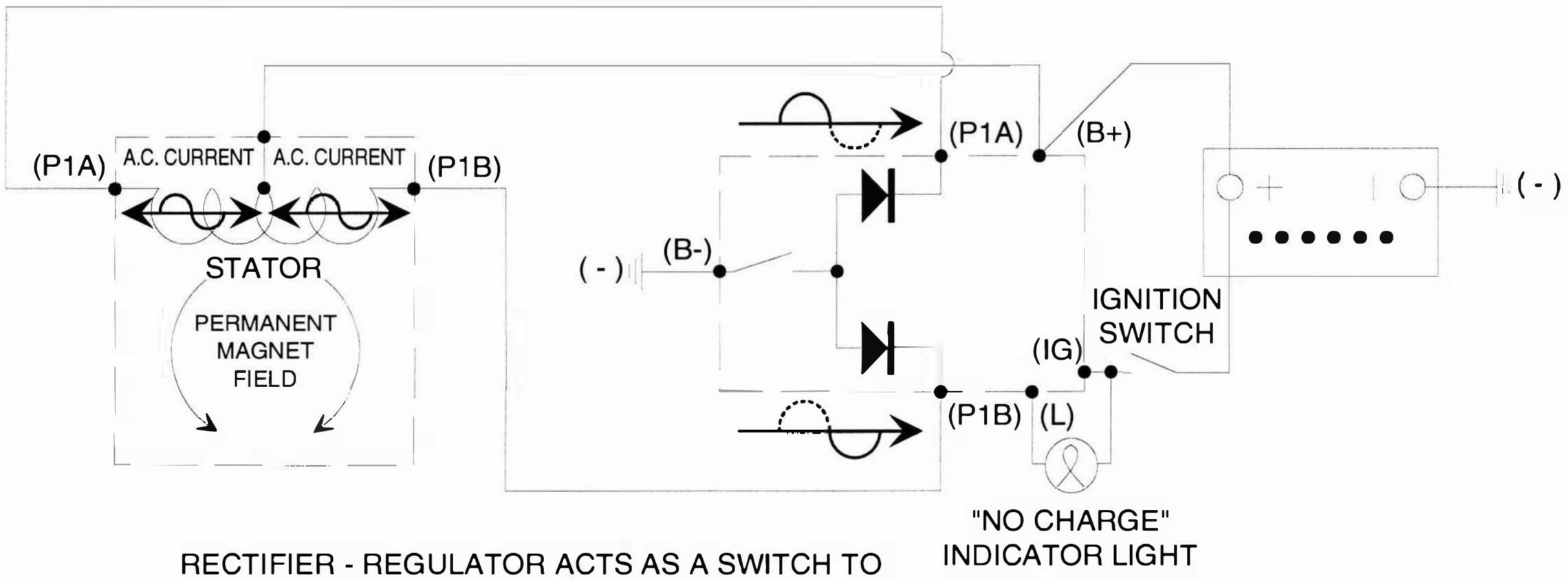

RECTIFIER - REGULATOR ACTS AS A SWITCH TO
OPEN THE OUTPUT CIRCUIT WHEN VOLTAGE IS **HIGH**
AND *CLOSE* WHEN VOLTAGE IS *LOW*

DUCATI

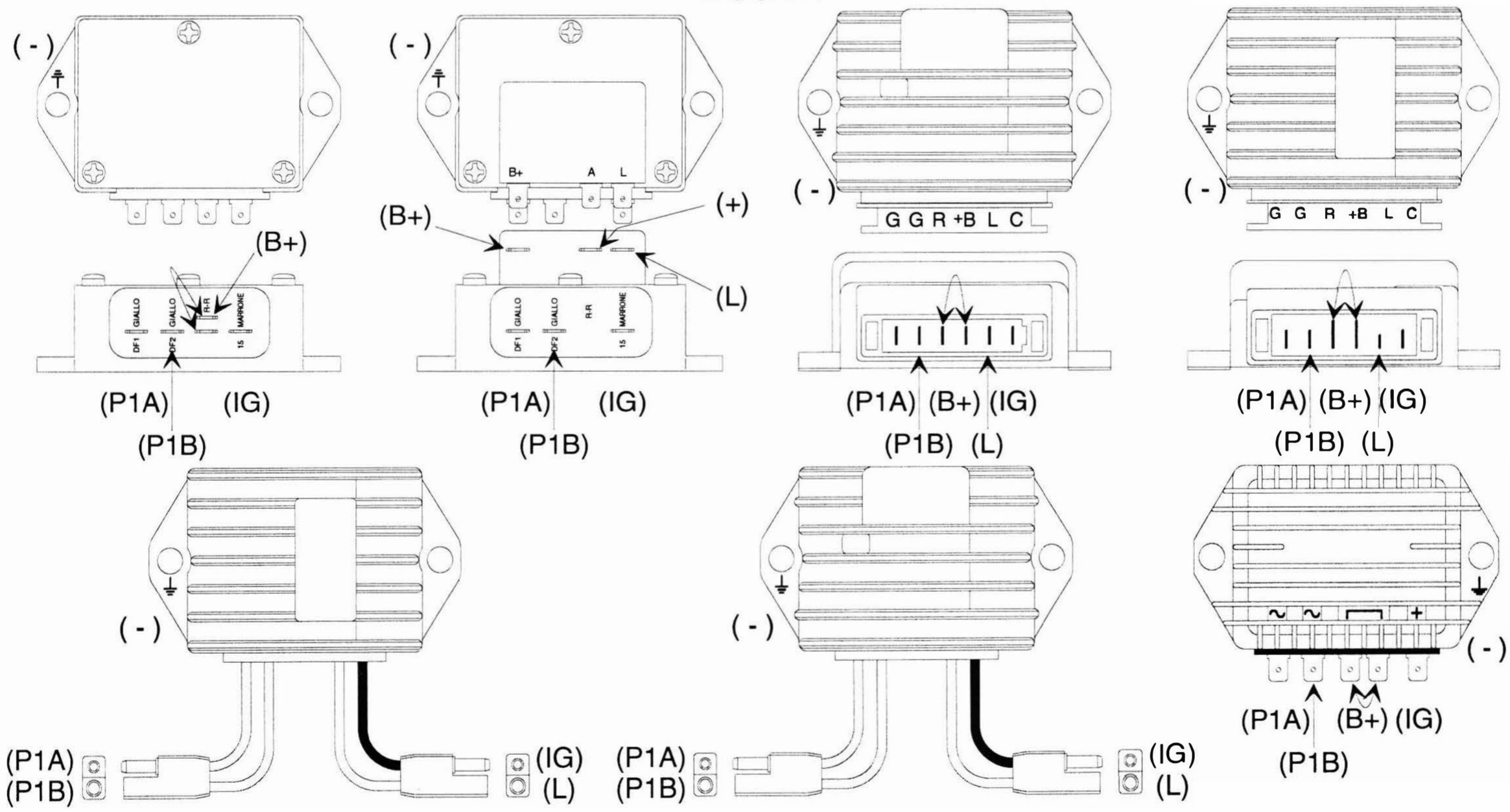

PERMTYPE.DRW 2/00

(c) JIMCO Inc., 2000