Automotive/Electrical Service Manual

AMERICAN BOSCH MARKETING DIVISION AMBAC INDUSTRIES INC. SPRINGFIELD, MASS. 01107

Supersedes Manual Section 105-10-100, Issued June, 1968

SERVICE PARTS LIST
For
AMERICAN BOSCH
MAG-TRONIC IGNITION SYSTEM

SYMBOLS

• — New Part	** — Not Illustrated
† — Discontinued with no replacement.	*** — Not Shown Assembled
* — Parts Included in listed kit.	| — Text or listing opposite has been revised or changed.

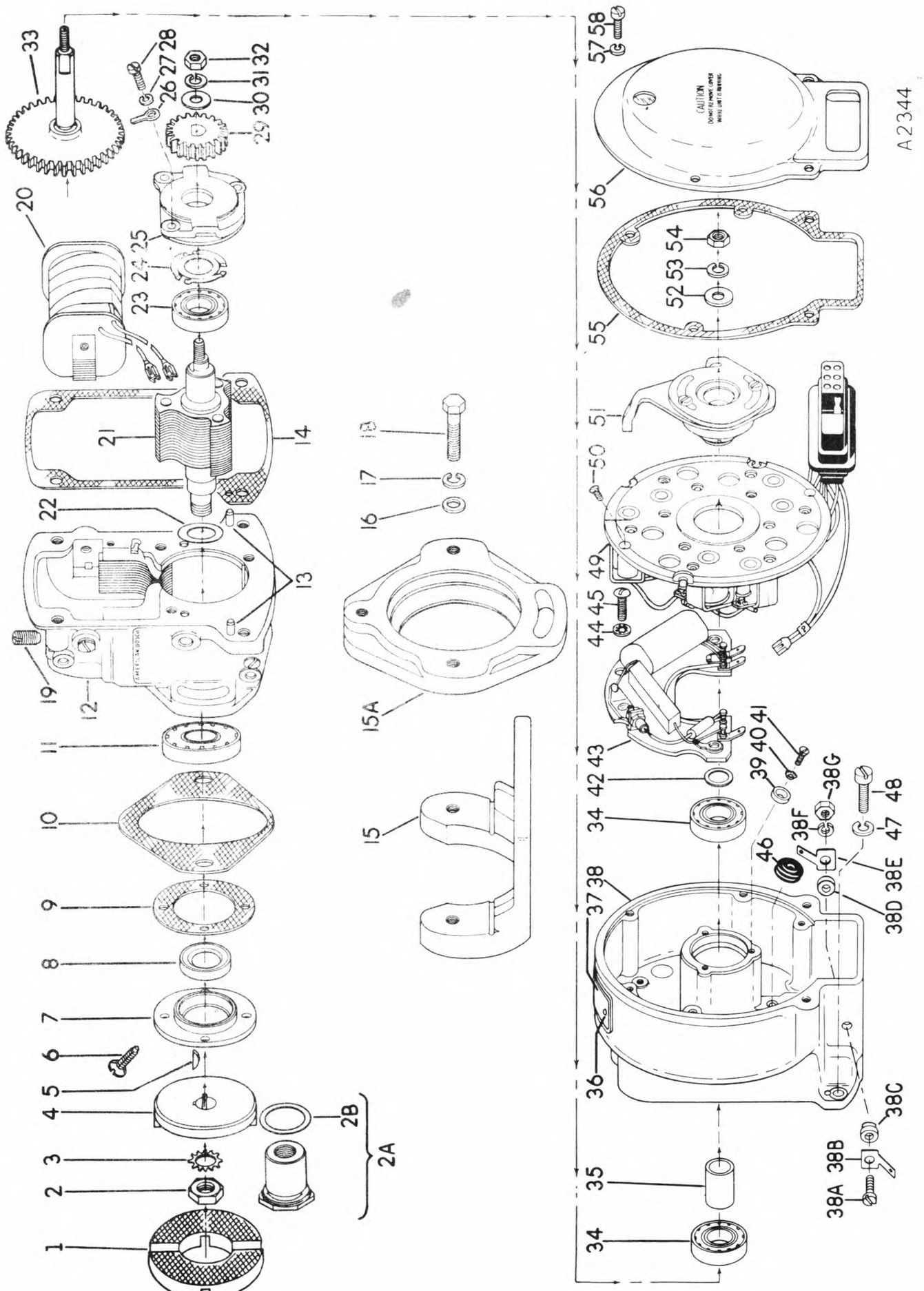

Figure 1 - MTC IGNITION GENERATOR & ACCESSORY EXPLODED VIEW

DIVISION OF

AMERICAN BOSCH ELECTRICAL PRODUCTS | AMBAC | COLUMBUS, MISS. 39701, U. S. A.

INSTALLATION INSTRUCTIONS

FOR

MAG-TRONIC®

DISTRIBUTOR MODULE ASSEMBLIES

Distributor module assemblies supplied for service do not have timing marks. Therefore, proceed as follows when replacing one of these assemblies.

1. Assemble the **old** distributor module assembly to the module housing.

2. Inscribe a mark on the edge of the module housing in line with the timing mark on the distributor module assembly.

3. Remove the old distributor module assembly and install the new assembly.

4. Inscribe a timing line on the new distributor module assembly in line with the mark inscribed on the edge of the module housing.

5. Complete the reassembly of the ignition generator as outlined in Manual Section 105-10-120.

AMERICAN BOSCH ELECTRICAL PRODUCTS DIVISION
AMBAC INDUSTRIES, INC.
COLUMBUS, MISSISSIPPI 39701, U. S. A.

IF 521026

REVISED 1-69

SERVICE PARTS LIST
For
MTC IGNITION GENERATORS

Illustration Number		Part Number	Quantity Used	Description of Part
1		See Accessories	1	DISC, drive
2		NT 3019	1	NUT, fastening - drive plate
2 A		See Accessories	1	HARDWARE KIT
2 B		See Accessories	as req'd	WASHER, spacing - drive gear
3		WA 21-14	1	WASHER, lock
4		See Variations	1	PLATE, drive
5	*	KY 3001-1	1	KEY, Woodruff
6	*	SC 3072-1	4	SCREW, fastening - oil seal retaining plate
7		PL 521038 A	1	PLATE, retaining - oil seal - includes illustrated part 8
8	*	SE 3009	1	SEAL, oil
9	*	GA 521010	1	GASKET, retaining plate
10 a		GA 52155	1	GASKET, vertical flange
b		GA 521009	1	GASKET, flange adapter
11	*	BB 3002	1	BALL BEARING, inductor rotor - drive end
12 a		HG 521046 A	1	HOUSING ASSEMBLY, magnetic - includes illustrated part 13 (For MTC Edition A & B Ignition Generators)
b	•	HG 521081 A	1	HOUSING ASSEMBLY, magnetic - includes illustrated part 13 (For MTC Edition C Ignition Generators)
13		PN 1117	2	PIN, locating - module housing
14	*	GA 521008	1	GASKET, magnetic housing
15		See Variations	1	ADAPTER, base mounting
		See Variations	1	ADAPTER, flange mounting
16		WA 1-11	2	WASHER, plain
17		WA 5-10	2	WASHER, lock
18		SC 3064-1	2	BOLT, fastening - base or vertical flange adapter
19		SC 3059	2	SCREW, set - coil
20 a		CL 521022 A	1	COIL ASSEMBLY (For MTC Edition A & B Ignition Generators)
b	•	CL 521033 A	1	COIL ASSEMBLY (For MTC Edition C Ignition Generators)
21 a		RT 521011 A	1	ROTOR, inductor (For MTC Edition A Ignition Generators)
b		RT 521021 A	1	ROTOR, inductor (For MTC Edition B Ignition Generators)
c	•	RT 521031 A	1	ROTOR, inductor (For MTC Edition C Ignition Generators)
22		WA 3051-3	1	WASHER, spacing - inductor rotor (See Note 1)
23	*	BB 3003	1	BALL BEARING, inductor rotor - gear end
24		WA 3094-1	1	WASHER, spring
25		BK 521014 A	1	BRACKET ASSEMBLY, support - ball bearing
26		EC 3046-4	1	TERMINAL, positioning - coil lead
27	*	WA 5-5	3	WASHER, lock
28	*	SC 23-8	3	SCREW, fastening - support bracket
29		See Variations	1	GEAR, inductor rotor
30		WA 1-9	1	WASHER, plain

- Continued -

Illustration Number		Part Number	Quantity Used	Description of Part
31	*	WA 5-8	1	WASHER, lock
32	*	NT 6-8	1	NUT, fastening - inductor rotor gear
33		See Variations	1	GEAR, distributor
34	*	BB 3001	2	BALL BEARING, distributor gear
35		BG 3022	1	BUSHING, spacing - ball bearing
36		SC 151-2	2	SCREW, fastening - nameplate
37		NP 521002	1	NAMEPLATE
38 a		HG 521038 A	1	HOUSING ASSEMBLY, module (For standard MTC Ignition Generators)
b	•	HG 521075 A	1	HOUSING ASSEMBLY, module - includes illustrated parts 38 A thru G (For Ignition Generators with an "L" suffix)
38 A	•	SC 3189-10	1	SCREW, fastening - terminals
38 B	•	EC 521030	1	TERMINAL, external
38 C	•	IS 6816	1	INSULATION BUSHING, terminal fastening screw
38 D	•	WA 581008	1	WASHER, insulation
38 E	•	EC 3058-2	1	TERMINAL, internal
38 F	•	WA 22-5	1	WASHER, lock
38 G	•	NT 503-3	1	NUT, fastening
39	*	WA 521015	3	WASHER, retaining - ball bearing
40	*	WA 3091-1	3	WASHER, lock
41	*	SC 55-6	3	SCREW, fastening - retaining washer
42 a	*	WA 3088-1	as req'd	WASHER, spacing (.002" thick)
b	*	WA 3088-2	as req'd	WASHER, spacing (.004" thick)
c	*	WA 3088-3	as req'd	WASHER, spacing (.007" thick)
d	*	WA 3088-4	as req'd	WASHER, spacing (.010" thick)
43		See Variations	1	POWER MODULE ASSEMBLY
44	*	WA 22-5	as req'd	WASHER, lock
45 a	*	SC 41-8	as req'd	SCREW, fastening - power module (See Note 2)
b	*	SC 42-8	as req'd	SCREW, fastening - power module (See Note 3)
46		IS 721005	1	INSULATION GROMMET, coil leads
47	*	WA 5-8	4	WASHER, lock
48		SC 27-12	4	SCREW, fastening - module housing
49		See Variations	1	DISTRIBUTOR MODULE ASSEMBLY (See Note 4)
50	*	SC 55-6	2	SCREW, fastening - distributor module assembly
51		See Variations	1	DISTRIBUTOR ROTOR ASSEMBLY
52		WA 1-9	1	WASHER, plain
53	*	WA 5-8	1	WASHER, lock
54	*	NT 6-8	1	NUT, fastening - distributor rotor
55	*	GA 521011	1	GASKET, cover
56		CV 521024 A	1	COVER ASSEMBLY
57	*	WA 5-5	5	WASHER, lock
58	*	SC 23-8	5	SCREW, fastening - cover assembly

NOTE 1: This spacing washer is not applicable to MTC Edition A Ignition Generators with inductor rotors that have a thick washer (with a black oxide finish on the O. D.) at the drive end of the rotor stack or to MTC Edition B & C Ignition Generators.

NOTE 2: Applicable to units utilizing screws only to secure the power module.

NOTE 3: Applicable to units that utilize both screws and nuts to secure the power module.

NOTE 4: When a distributor module assembly is installed in an MTC Ignition Generator that has a part number with an "L" suffix (Example: MTC 12C 3310L) a KT 521035A must be assembled to the module.

* Included in overhaul kit KT 521030 in the following quantities:

2 - BB 3001
1 - BB 3002
1 - BB 3003

1 - GA 521008
1 - GA 521010
1 - GA 521011

1 - KY 3001-1

1 - NT 6-8

2 - SC 23-8
1 - SC 41-8
2 - SC 55-6
4 - SC 3072-1

1 - SE 3009

3 - WA 5-5
1 - WA 5-8
1 - WA 22-5
1 - WA 3088-1

1 - WA 3088-2
1 - WA 3088-3
1 - WA 3088-4
1 - WA 3091-1
1 - WA 521015

MTC SERVICE PART VARI

NOTE: The edition letters (A, B & C) have been omitted from the following Ignition - Generator part more than once. The "L" suffix (which indicates that a unit is equipped to accommodate the reason.

Ignition Generator	ILLUSTRATION NUMBER 4 Edition A	4 Edition B	4 Edition C	15 & 15A	29
1 & 2 CYLINDER					
MTC 1-3220	PL 521032-36	PL 521068-36	PL 521068-36	AD 521003	GE 521011-2
MTC 2-3220	" -36	" -36	" -36	"	" -2
4 CYLINDER					
MTC 4-1210	PL 521032-36	PL 521068-36	PL 521068-26	AD 521001	GE 521011-2
" -1211			" -25	"	" -2
" -1220	PL 521032-29	PL 521068-29	● " - 4	"	" -2
" -1221			● " - 4	"	" -2
" -1222			● " - 4	"	" -2
" -3210	PL 521032-36	PL 521068-36	● " -26	AD 521003	" -2
" -3220	" -29	" -29	● " - 4	"	" -2
" -4210	PL 521015-36	PL 521066-36	● PL 521066- 4		" -2
" -4220	" -36	" -36			" -2
" -6210	PL 521032-36	PL 521068-36	● PL 521068-26	AD 521005	" -2
" -6220	" -29	" -29	● " - 4	"	" -2
5 CYLINDER					
MTC 5-1510			PL 521068-33	AD 521001	● GE 521011-5
" -1520			" -32	"	● " -5
6 CYLINDER					
MTC 6-1310	PL 521032-36	PL 521068-36	● PL 521068-24	AD 521001	GE 521011-3
" -1312	" -32	" -32	" -32	"	" -3
" -1315			● " -25	"	" -3
" -1320	PL 521032-36	PL 521068-36	● " -20	"	" -3
" -1322	" -32	" -32	" -32	"	" -3
" -1323	† " -33	" -33	● " -34	"	" -3
" -1324			● " -20	"	" -3
" -3310	PL 521032-36	PL 521068-36	● " -24	AD 521003	" -3
" -3320	" -36	" -36	● " -20	"	" -3
" -3320B	† " - 3	" - 3	● " -23	"	" -3
" -4210	PL 521015-30	PL 521066-30			" -2
" -4211	" -30				" -2
" -4220	" - 6	PL 521066- 6			" -2
" -4310			● PL 521066-24		" -3
" -4320			● " -20		" -3

ATIONS

umbers in order to eliminate the necessity of listing each number
electronic starting device) has also been omitted for the same

33	43	49 See Note 4 Page 4	51

GE 521010A-2 " -2	PL 521035A "	PL 521050A PL 521048A	RT 521019A "

GE 521010A-2	PL 521035A	PL 521029A	RT 521015A-41
" -2	"	"	• " - 7
" -2	"	"	" -42
" -2	"	"	" -21
" -2	"	"	" -28
" -2	"	"	" -41
" -2	"	"	" -42
" -2	"	"	" -41
" -2	"	"	" -42
" -2	"	"	" -41
" -2	"	"	" -42

• GE 521010A-5	PL 521035A	• PL 521082A-1	RT 521019A
• " -5	"	• " -2	"

GE 521010A-3	PL 521035A	PL 521028A-1	RT 521015A-31
" -3	"	" -1	" -35
" -3	"	" -1	• " -33
" -3	"	" -2	" -22
" -3	"	" -2	" -36
" -3	"	" -2	• " -38
" -3	"	" -2	" -32
" -3	"	" -1	" -31
" -3	"	" -2	" -22
" -3	"	" -2	" -22
" -2	"	" -1	" -31
" -2	"	" -1	• " - 7
" -2	"	" -2	" -22
" -3	"	" -1	" -31
" -3	"	" -2	" -22

- Continued -

Ignition Generator	ILLUSTRATION NUMBER				
	4			15 & 15A	29
	Edition A	Edition B	Edition C		
6 CYLINDER — Cont'd					
MTC 6-6310	PL 521032-36	PL 521068-36	PL 521068-24	AD 521005	GE 521011-3
" -6320	" -36	" -36	• " -20	"	" -3
8 CYLINDER					
MTC 8-1210	PL 521032-34	PL 521068-34	• PL 521068-6	AD 521001	GE 521011-2
" -1212	" -32	" -32	• " -5	"	" -2
" -1214			• " -5	"	" -2
" -1215			• " -27	"	" -2
" -1216			• " -27	"	" -2
" -1220	PL 521032-31	PL 521068-31	• " -4	"	" -2
" -1221	" -31	" -31	• " -5	"	" -2
" -1222			• " -6	"	" -2
" -1223	PL 521032-29	PL 521068-29		"	" -2
" -1225			• PL 521068-4	"	" -2
" -1226			• " -4	"	" -2
" -1227			• " -4	"	" -2
" -1310	PL 521032-36	PL 521068-36		"	" -3
" -1320	" -31	" -31		"	" -3
" -3210	" -34	" -34	• PL 521068-6	AD 521003	" -2
" -3211	" -34	" -34	• " -5	"	" -2
" -3212	" -32	" -32	• " -5	"	" -2
" -3220	" -31	" -31	• " -4	"	" -2
" -3221	" -31	" -31	• " -5	"	" -2
" -3310	" -36	" -36		"	" -3
" -3311	" -32	" -32		"	" -3
" -4210	PL 521015-34	PL 521066-34	PL 521066-6		" -2
" -4214	" -36	" -36	• " -5		" -2
" -4220	" -2	" -2	• " -4		" -2
" -6210	PL 521032-34	PL 521068-34	• PL 521068-6	AD 521005	" -2
" -6220	" -31	" -31	• " -4	"	" -2
" -6221	" -31	" -31	• " -5	"	" -2
10 CYLINDER					
MTC 10-1510			PL 521068-33	AD 521001	• GE 521011-5
" -1511			• " -25	"	• " -5
" -1512			• " -26	"	• " -5
" -1520			" -32	"	• " -5
" -1521			" -30	"	• " -5
" -1522			" -30	"	• " -5
" -1523			" -30	"	• " -5
" -1524			" -30	"	• " -5

S				
	33	43	49 See Note 4 Page 4	51

	GE 521010A-3 " -3	PL 521035A "	PL 521028A-1 " -2	RT 521015A-31 " -22

GE 521010A-2	PL 521033A	PL 521031A-1	RT 521015A-1
" -2	"	" -1	" -25
" -2	"	" -1	• " -29
" -2	"	" -1	• " -26
" -2	"	" -1	• " -7
" -2	"	" -2	" -22
" -2	"	" -2	" -8
" -2	"	" -2	" -4
" -2	"	" -2	" -28
" -2	"	" -2	" -24
" -2	"	" -2	" -21
" -2	"	" -2	" -28
" -3	"	" -1	" -1
" -3	"	" -2	" -22
" -2	"	" -1	" -1
" -2	"	" -1	" -23
" -2	"	" -1	" -25
" -2	"	" -2	" -22
" -2	"	" -2	" -8
" -3	"	" -1	" -1
" -3	"	" -1	" -23
" -2	"	" -1	" -1
" -2	"	" -1	• " -29
" -2	"	" -2	" -22
" -2	"	" -1	" -1
" -2	"	" -2	" -22
" -2	"	" -2	" -8

• GE 521010A-5	PL 521033A	• PL 521039A-1	• RT 521015A-14
• " -5	"	• " -1	" -35
• " -5	"	• " -1	• " -16
• " -5	"	• " -2	• " -15
• " -5	"	• " -2	" -2
• " -5	"	• " -2	• " -17
• " -5	"	• " -2	• " -18
• " -5	"	• " -2	• " -19

Automotive/Electrical Service Manual

AMERICAN BOSCH MARKETING DIVISION AMBAC INDUSTRIES INC. SPRINGFIELD, MASS. 01107

Ignition Generator	ILLUSTRATION NUMBERS					
	4			15 & 15A	29	
	Edition A	Edition B	Edition C			
12 CYLINDER						
MTC 12-1310	PL 521032-34	PL 521068-34	• PL 521068-24	AD 521001	GE 521011-3	
" -1311	" -35	" -35	• " -24	"	" -3	
" -1320	" -30	" -30	• " -20	"	" -3	
" -1324	" -30	" -30	• " -5	"	" -3	
" -3210	" -30	" -30		AD 521003	" -2	
" -3220	" -35	" -35		"	" -2	
" -3310	" -34	" -34	• PL 521068-24	"	" -3	
" -3311	" -30	" -30	• " -25	"	" -3	
" -3320	" -30	" -30	• " -20	"	" -3	
" -3321	" -30	" -30	• " -20	"	" -3	
" -4210	PL 521015-30	PL 521066-30			" -2	
" -4212	" -30	" -30			" -2	
" -4215	" -6	" -6			" -2	
" -4220	" -6	" -6			" -2	
" -4222	" -6	" -6			" -2	
" -4225	" -36	" -36			" -2	
" -4310	" -34	" -34	• PL 521066-24		" -3	
" -4320	" -34	" -34	• " -20		" -3	
" -4326	" -30	" -30	• " -5		" -3	
" -4368		" -30	• " -5		" -3	
" -6221	PL 521032-35	PL 521068-35		AD 521005	" -2	
" -6310	" -34	" -34	• PL 521068-24	"	" -3	
" -6311	" -35	" -35	• " -24	"	" -3	
" -6320	" -30	" -30	• " -20	"	" -3	

NGFIELD, MASS. 01107

ORIES

)

33	43	49 See Note 4 Page 4	51

GE 521010A-3	PL 521033A	PL 521026A-1	RT 521015A-1
" -3	"	" -1	" -3
" -3	"	" -2	" -2
" -3	"	" -2	" -10
" -2	"	" -1	" -1
" -2	"	" -2	" -2
" -3	"	" -1	" -1
" -3	"	" -1	" -3
" -3	"	" -2	" -2
" -3	"	" -2	" -4
" -2	"	" -1	" -1
" -2	"	" -1	" -5
" -2	"	" -1	" -11
" -2	"	" -2	" -2
" -2	"	" -2	" -6
" -2	"	" -2	" -12
" -3	"	" -1	" -1
" -3	"	" -2	" -2
" -3	"	" -2	" -13
" -3	"	" -2	" -13
" -2	"	" -2	" -4
" -3	"	" -1	" -1
" -3	"	" -1	" -3
" -3	"	" -2	" -2

ption of Part

)
ck)
three each of WA 1187 and
o Hercules model G-339,
)0, GO-198, GO 226 and

three each WA 1187 and
o Continental model R-602
Waukesha model 135-GK,
-GLB, 190-GLBU & 195-GKU

gear (.004" thick)
gear (.010" thick)

IGNITION GENERATOR ACCESSORIES

(Not supplied with an Ignition Generator)

Illustration Number	Part Number	Quantity Used	Description of Part
1	DC 731002	1	DISC, drive (9/32" thick)
	DC 731003	1	DISC, drive (1-3/16" thick)
2 A	KT 731002	1	KIT - includes a nut and three each of WA 1187 and WA 1188 (Applicable to Hercules model G-339, G-2000, G-2300, G-3400, GO-198, GO 226 and GO-298 engines)
	KT 731003	1	KIT - includes a nut and three each WA 1187 and WA 1188 (Applicable to Continental model R-602 and S-820 engines and Waukesha model 135-GK, 135-GZ, 135-GZU, 190-GLB, 190-GLBU & 195-GKU engines)
2 B	WA 1187	as req'd	WASHER, spacing - drive gear (.004" thick)
	WA 1188	as req'd	WASHER, spacing - drive gear (.010" thick)

WIRING HARNESS ASSEMBLIES

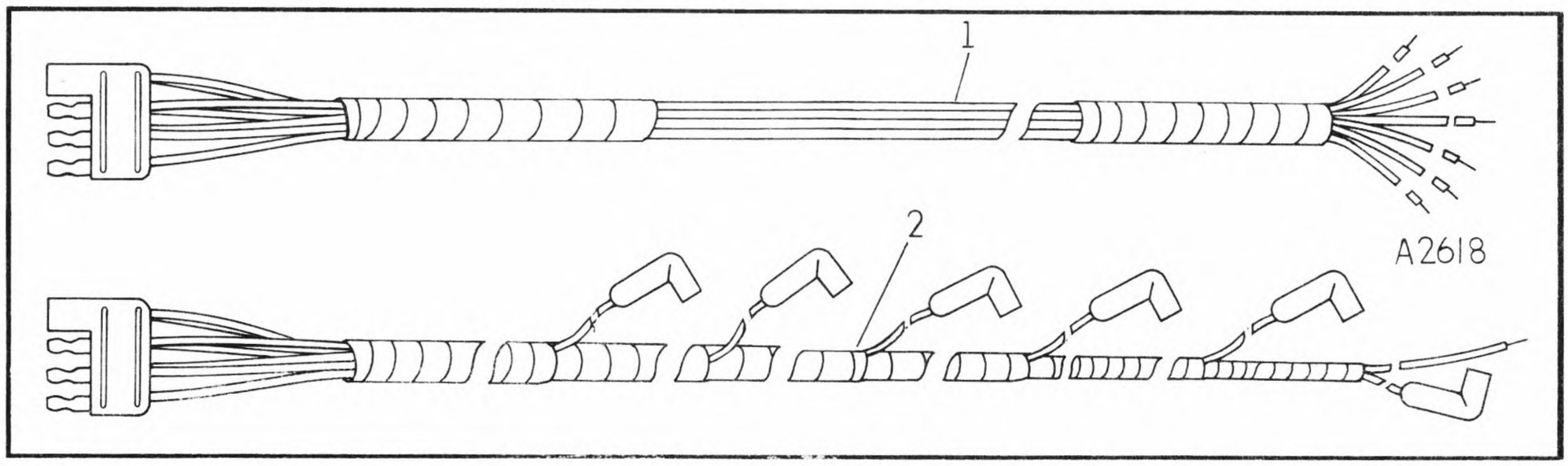

FIGURE 2

STANDARD (Illustration Number 1)

LENGTH	1 CYLINDER	2 CYLINDER	4 CYLINDER	5 CYLINDER
8 inches	HAA 1A1	HAA 2A1	HAA 4A1	HAA 5A1
6 feet	" 2	" 2	" 2	" 2
12 feet	" 3	" 3	" 3	" 3
	6 CYLINDER	* 8 CYLINDER	* 10 CYLINDER	* 12 CYLINDER
8 inches	HAA 6A1	HAA 8A1	HAA 10A1	HAA 12A1
6 feet	" 2	" 2	" 2	" 2
12 feet	" 3	" 3	" 3	" 3

* Braided harness shielding is available under part #CB 3084-2 (50 ft. length)

SPECIAL (Illustration Number 2)

HAA 4A4 Applicable to Cummins model GNHC-4 engines that were originally equipped with Mag-tronic Ignition.

HAA 6A5 Applicable to Cummins model GNH-220 & GNH-250 engines that were originally equipped with Mag-tronic Ignition.

HAA 6A6 Applicable to Minneapolis - Moline model HD 800 engines.

HAA 12A6 Applicable to Cummins model GNVH-450 & GV-525 engines that were originally equipped with Mag-tronic Ignition.

IGNITION TRANSFORMERS
TCD (Single Spark)

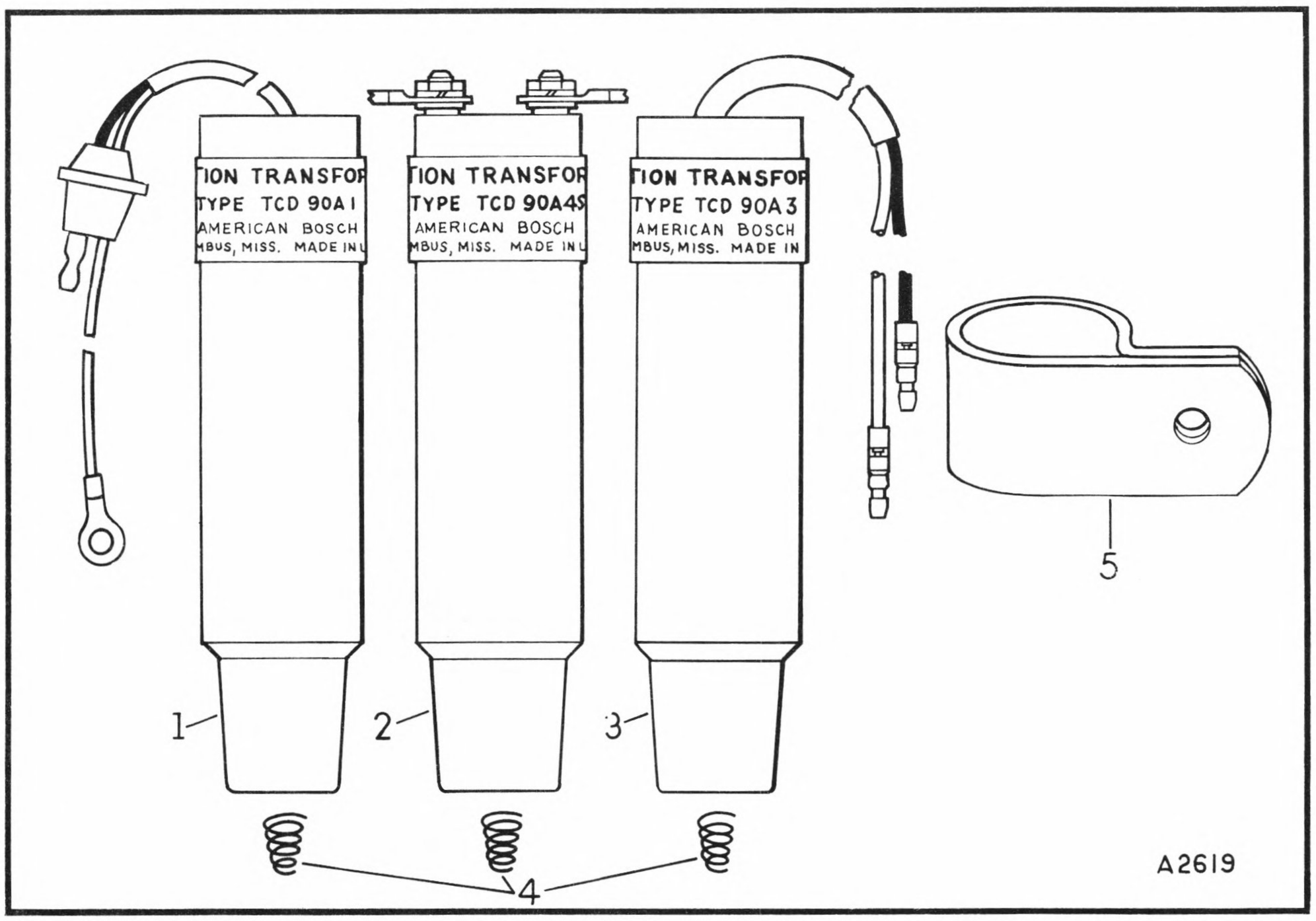

FIGURE 3

Illustration Number	Part Number	Description of Part
1	TCD 90A1	IGNITION TRANSFORMERS - includes one of illustrated part 4 (Applicable to Cummins engines that were originally equipped with Mag-tronic Ignition)
2	TCD 90A4S	IGNITION TRANSFORMERS - includes one each of illustrated parts 4 & 5 and one KT 571001
3	TCD 90A3	IGNITION TRANSFORMERS - includes one of illustrated part 4 (Special for Waukesha)
4	SP 571001	SPRING, high-tension
5	BK 571005	BRACKET, mounting - ignition transformer
**	KT 571001	KIT, hardware & terminal

AMERICAN BOSCH MARKETING DIVISION AMBAC INDUSTRIES INC. SPRINGFIELD, MASS. 01107

TCG (Dual Spark)

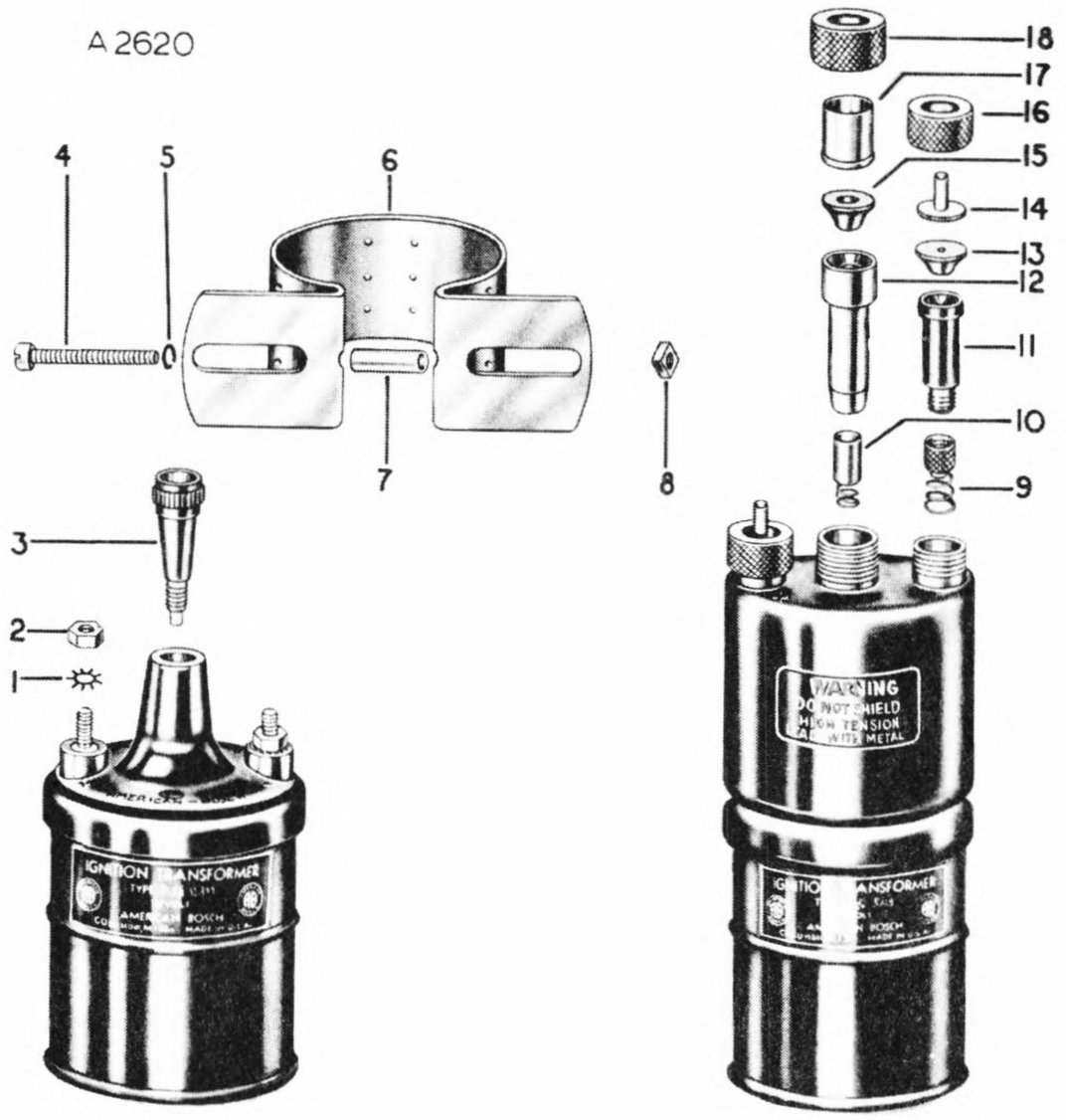

FIGURE 4

TCG 90A1S (Shielded)
TCG 90A3S (Shielded)

Illustration Number	Part Number	Quantity Used	Description of Part
4	SC 24-24	1	SCREW, fastening - mounting bracket
5	WA 5-5	1	WASHER, lock - fastening screw
6	BK 571002-1	1	BRACKET, mounting
7	† FP 86756	1	SPACER, mounting bracket
8	NT 3010	1	NUT, securing - mounting bracket fastening screw
9	NT 577	2	NUT WITH SPRING - primary outlet
10	EC 578	1	CONNECTOR WITH SPRING - secondary outlet
11	EC 52137	2	TERMINAL, insulated - primary outlet
12	IS 5745	1	INSULATOR, secondary outlet
13	IS 52477	2	BUSHING, insulation - primary outlet
14	EY 521003	2	FERRULE, primary outlet
15	IS 524	1	BUSHING, insulation - secondary outlet
16	NT 523	2	NUT, primary outlet
17	EY 522	1	FERRULE, secondary outlet
18	NT 5292	1	NUT, secondary outlet

TCG 90A2S (Unshielded)
TCG 90A4S (Unshielded)

Illustration Number	Part Number	Quantity Used	Description of Part
1	WA 21-8	2	WASHER, shakeproof - primary terminal
2	NT 504-8	2	NUT, securing - primary cable
3	IS 84050	1	TERMINAL, secondary tower
4	SC 24-24	1	SCREW, fastening - mounting bracket
5	WA 5-5	1	WASHER, lock - fastening screw
6	BK 571002-1	1	BRACKET, mounting
7	† FP 86756	1	SPACER, mounting bracket
8	NT 3010	1	NUT, securing - mounting bracket fastening screw

SYSTEM ACCESSORIES

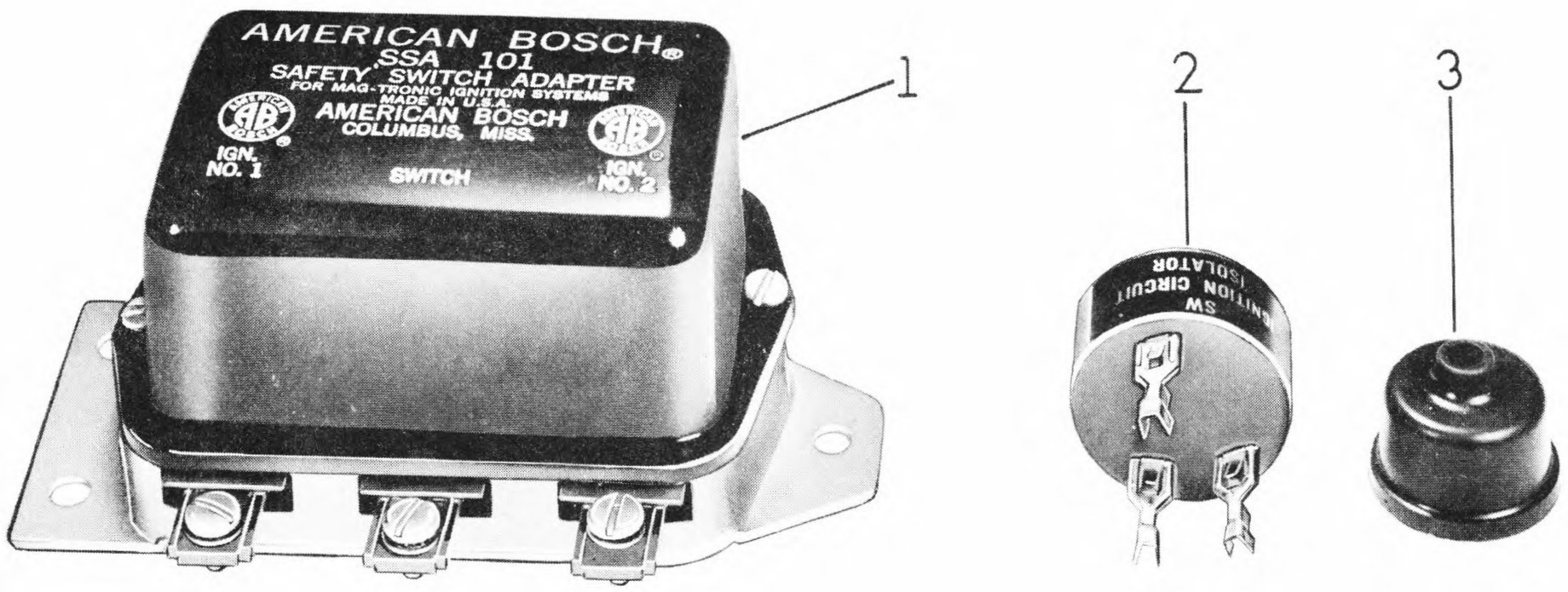

A 2650

FIGURE 5

Illustration Number	Part Number	Description of Part
1	SSA 101	SAFETY SWITCH ADAPTER
2	SSA 202	CIRCUIT ISOLATOR - includes 3 cable terminals
3	IS 521018	BOOT, sealing - ignition transformer high tension well (Applicable to TCD 90A2S & TCD 90A4S)

AMERICAN BOSCH MARKETING DIVISION AMBAC INDUSTRIES INC. SPRINGFIELD, MASS. 01107

EU 521001A ELECTRONIC STARTING UNIT

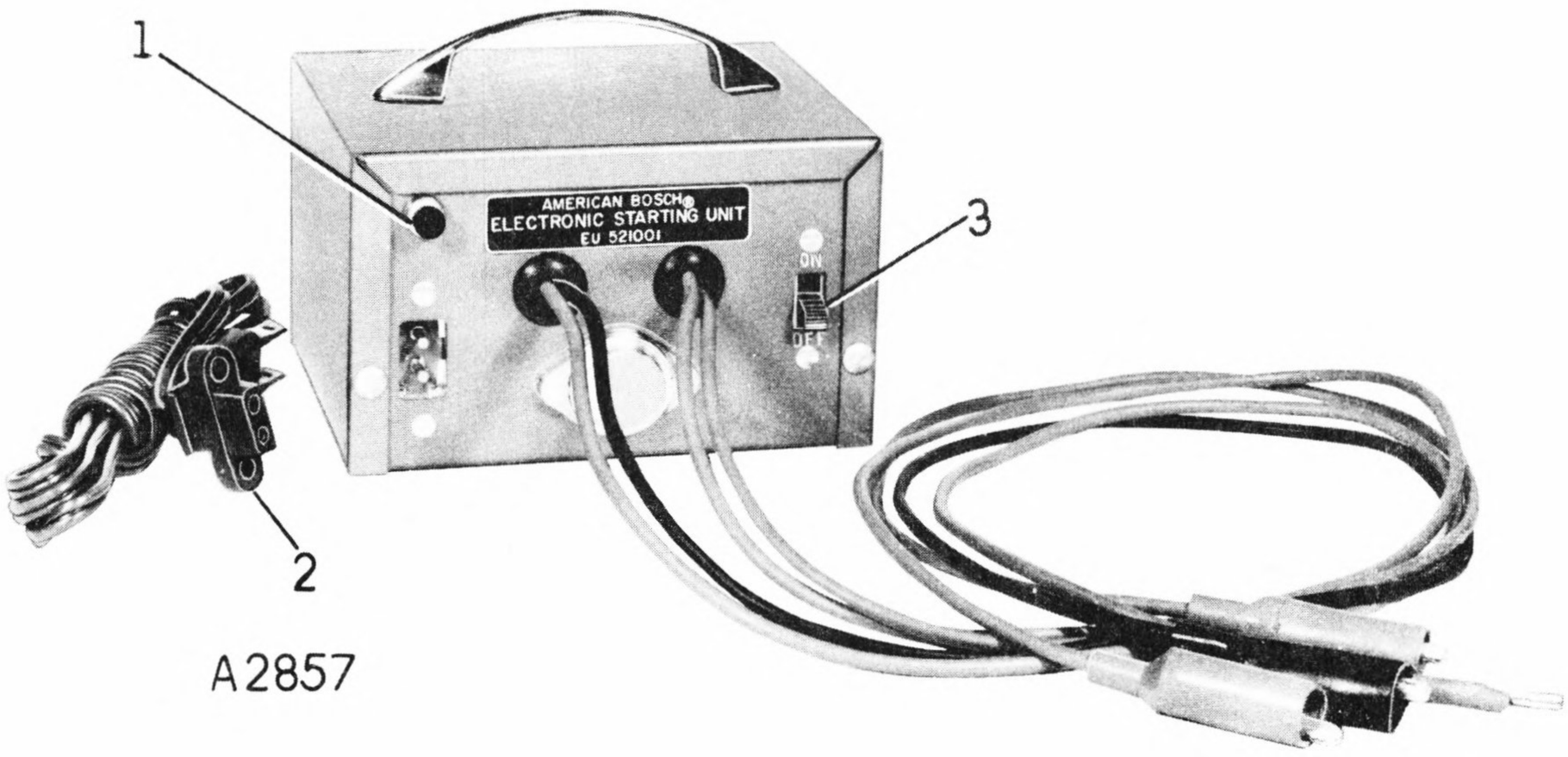

FIGURE 6

Illustration Number	Part Number	Quantity Used	Description of Part
1	• LP 521001	1	PILOT LIGHT
2	• CB 4014	1	CABLE, charging
3	SW 1002	1	SWITCH, "on - off"
**	• BY 521001A	1	BATTERY ASSEMBLY