Repair Price List No. 9846B

FAIRBANKS-MORSE

TYPE FM-J MAGNETOS

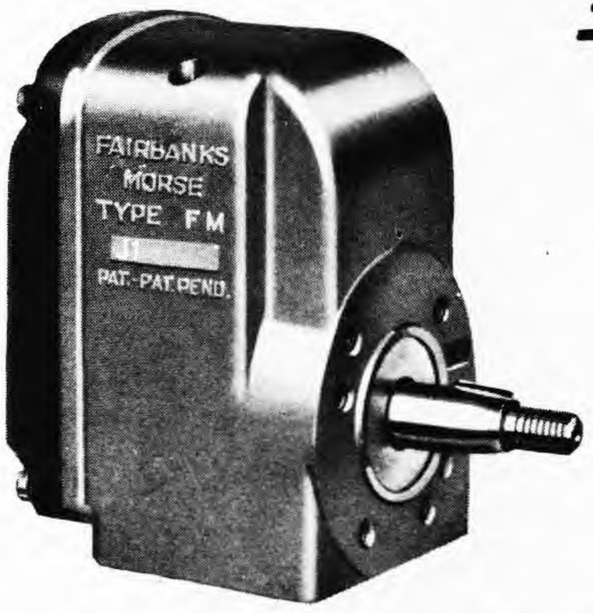

Type FM-J1A

Type FM-J2B

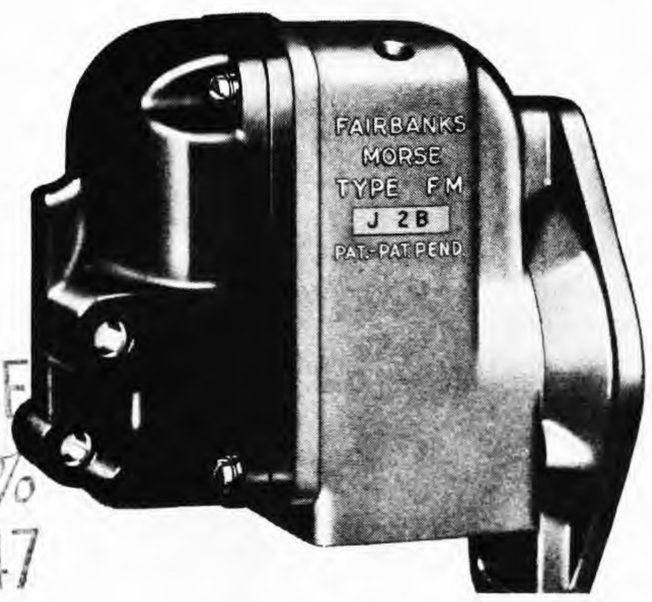

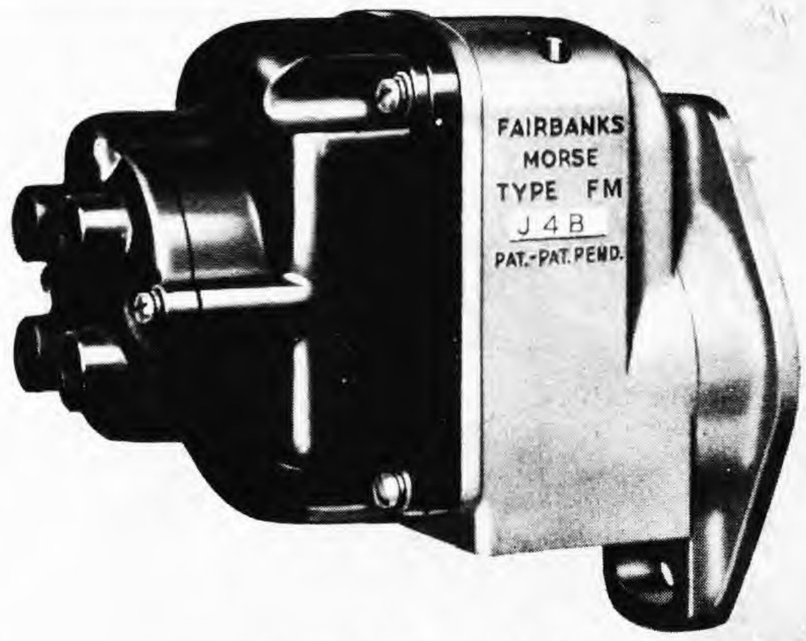

Type FM-J4B

ALL PRICES IN THIS PRICE LIST ARE INCREASED 8% EFFECTIVE AUG. 22, 1947
FAIRBANKS, MORSE & CO.

Prices Subject To Change Without Notice

To Order:
1. Find the part desired on the REPAIR CHARTS (Pages 2 and 3).
2. From the IDENTIFICATION NUMBER given on the chart, locate the part in the repair list.
3. Knowing the magneto type designation (stamped on frame), use INTERCHANGEABILITY COLUMNS and find the intersection of vertical and horizontal listings.
4. Order part by PART NUMBER and name of part.

Identification Number	Order By Part Number	Name of Part - Unless otherwise specified, part is for base and flange mounting, CW or CCW rotation magnetos.	List Price Each	No. Used FMJ1A FMJ1B	FMJ2A FMJ2B	FMJF2A FMJF2B	FMJ4A FMJ4B	Symbols (For factory use only)
682	B682	Distributor Compartment Cover Gasket	$0.06	. . .	. . .	1	1	Z4RD682A1
800	C800	Distributor Compartment Cover (Standard) . .	1.55	. . .	. . .	. . .	1	Z4RD800A6
	D800	Distributor Compartment Cover (CCW)	1.85	. . .	. . .	1-CCW	. . .	Z4RD800B
	E800	Distributor Compartment Cover (FM-J4A7 & 7A) .	2.50	. . .	. . .	. . .	1	Z4RD800D1
	H800	Distributor Compartment Cover (CW)	1.85	. . .	. . .	1-CW	. . .	Z4RD800F
		800 Always includes:						
		Cable Outlet Inserts . . . . . (nfs)	. . .	. . .	. . .	2	4	Z4RD2469D1
		Cable Outlet Inserts - E800 . . . . (nfs)	. . .	. . .	. . .	. . .	4	Z4RD2469E1
		High Tension Lead Assembly . . . . (nfs)	. . .	. . .	. . .	1	1	2505Z4RD5
		Cable Outlet Knobs - E800 . . (See A2741)	. . .	. . .	. . .	. . .	4	Z4RD2741A
	8S9A	Compartment Cover Screw . . . (#8-32x9/16")	.07/10	. . .	. . .	2	2	11FM8BX
	8LW3	Compartment Cover Screw Lockwasher . . (#8)	.05/10	. . .	. . .	2	2	11FM1AP
983A	A983A	Distributor High Tension Lead Rod	.12	. . .	. . .	1	1	Z4RD983B1
	B983A	Distributor High Tension Lead Rod	.12	. . .	1	. . .	. . .	Z2RD983C4
1498	D1498	Distributor Shaft Snap Ring	.06	. . .	. . .	1	1	Z4RD1498D
1498B	B1498B	Rotor Bearing Snap Ring	.06	1	1	1	1	ZRD5955B
1498D	B1498D	Rotor Shaft Snap Ring	.06	1	1	1	1	Z4RB1498F
1498E	A1498E	Rotor Shaft Pinion Snap Ring	.06	. . .	. . .	1	1	Z4RD1498D1
2276B	B2276B	End Cap Screw Flat Washer . . . . . (#10)	.15/10	4	4	4	4	ZRB2276A1
2425	V2425	Frame (For use with 2561 or 2561A Plates) . .	5.30	1	1	1	1	Z2RD2425D12
	AX2425	Frame (Integrally-cast Standard Flange) . . .	6.15	1	1	1	1	Z4RD2425J8
	CX2425	Frame (Basic Flange)	5.30	1	1	1	1	Z2RD2425H3
	NX2425	Frame (FM-J2B8)	5.95	. . .	1	. . .	. . .	Z2RD2425Q
		2425 Always includes:						
		Frame Field Lamination Assembly . . (nfs)	. . .	2	2	2	2	2427Z2RD2
		Ventilator Screen Group-NX2425 (See B6032BC)	. . .	. . .	2	. . .	. . .	. . . . .
		Note: Replacement frames, except NX2425, are drilled for both RH and LH primary terminal screws, self-tapping screws being inserted to close the holes.						
2428	. . . .	Coupling Housing Cupped Washer - See Impulse Coupling Price List No. 9835A.						

Parts marked (nfs) are not furnished separately.

Repair Chart - Type FM-J1 Magnetos

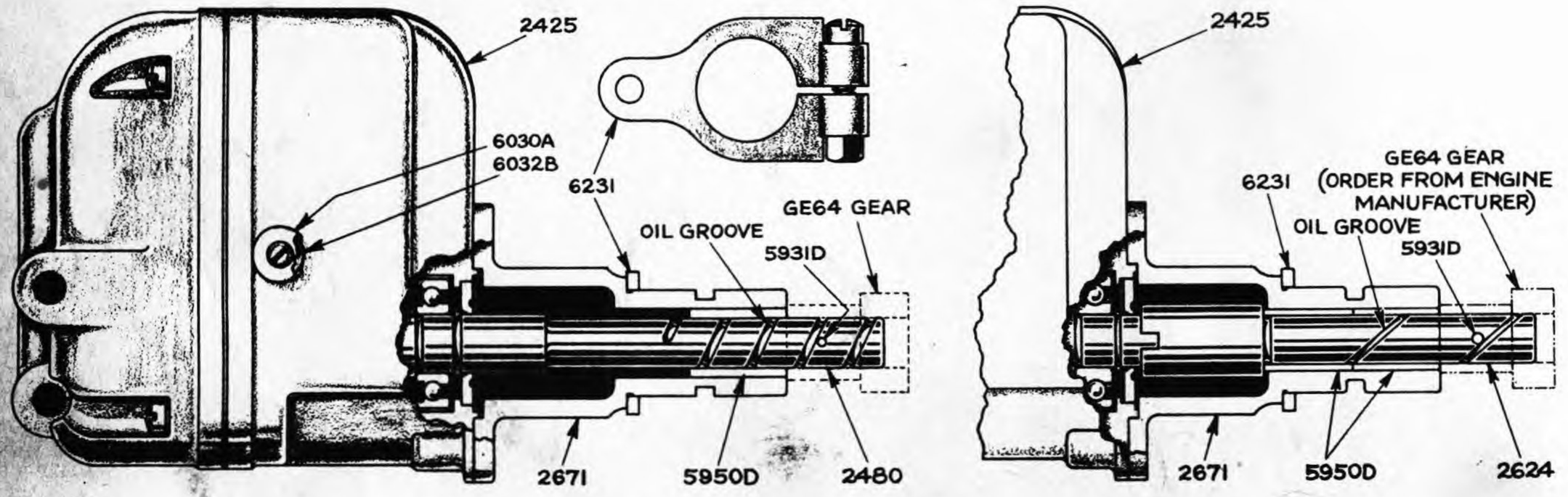

Repair Chart - Special Parts for Type FM-J2B8 Magnetos

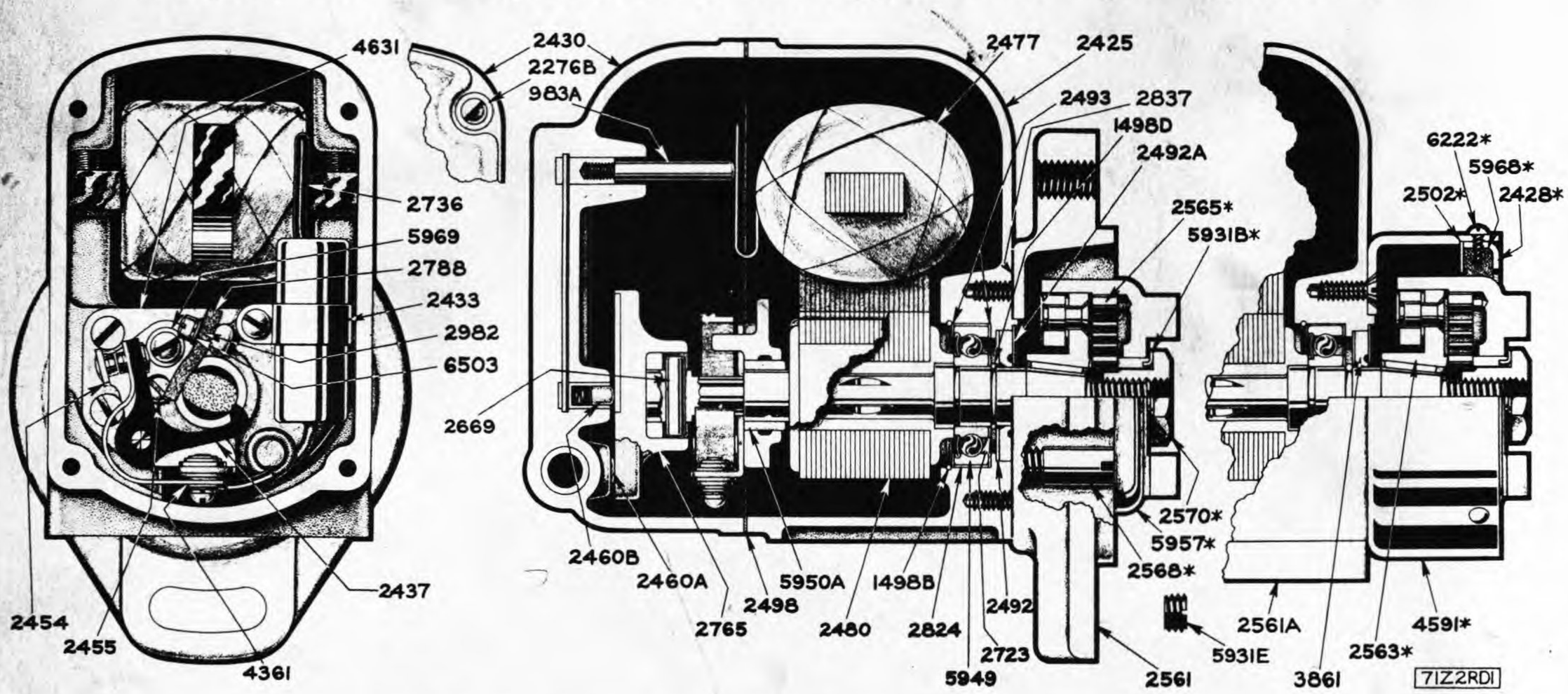

Repair Chart - FM-J2A & FM-J2B Magnetos

PARTS MARKED (*) ARE SHOWN AND DESCRIBED IN IMPULSE COUPLING REPAIR PRICE LIST NO. 9835A

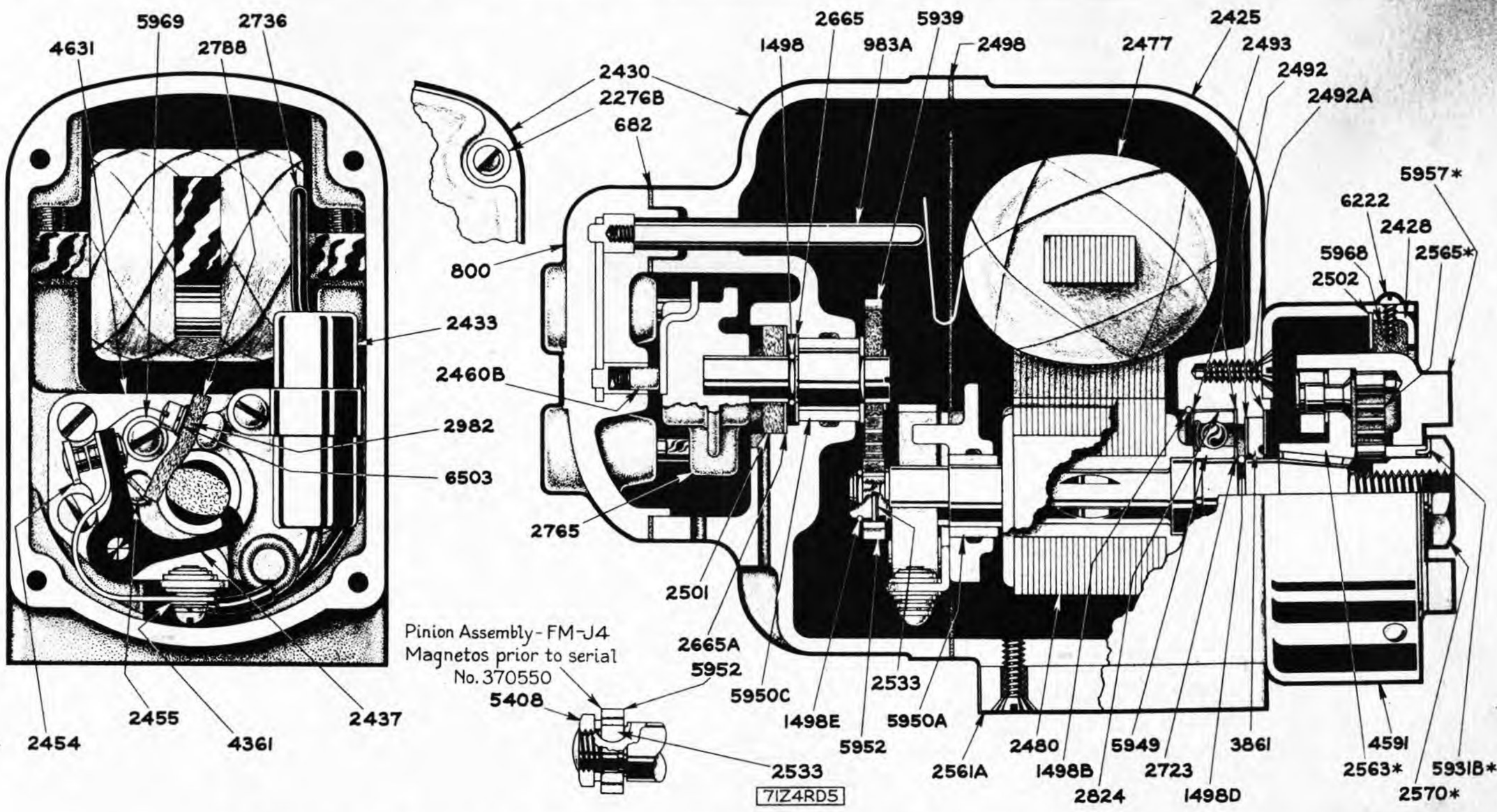

Repair Chart - Types FM-JF2A & FM-J4A Magnetos

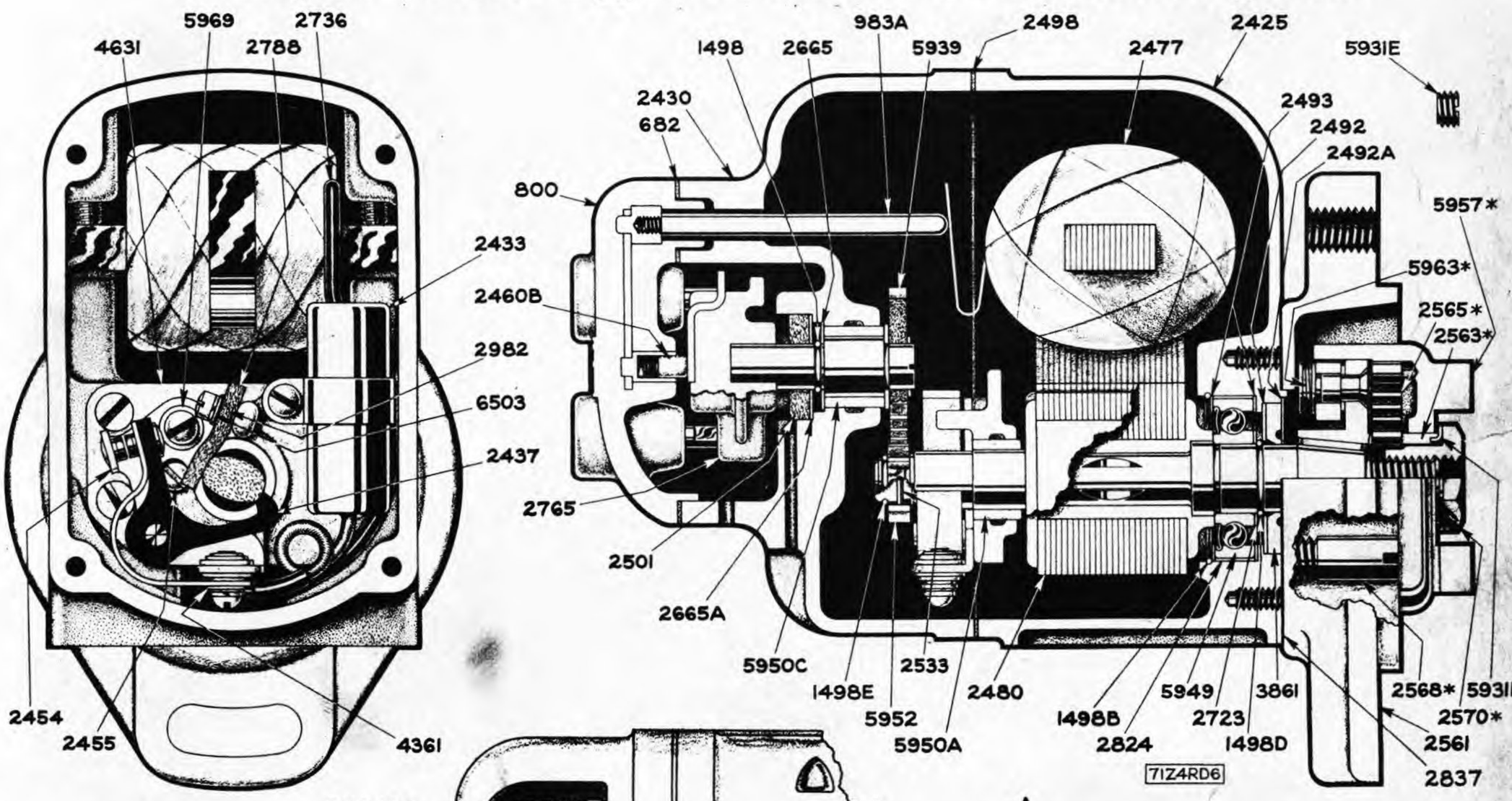

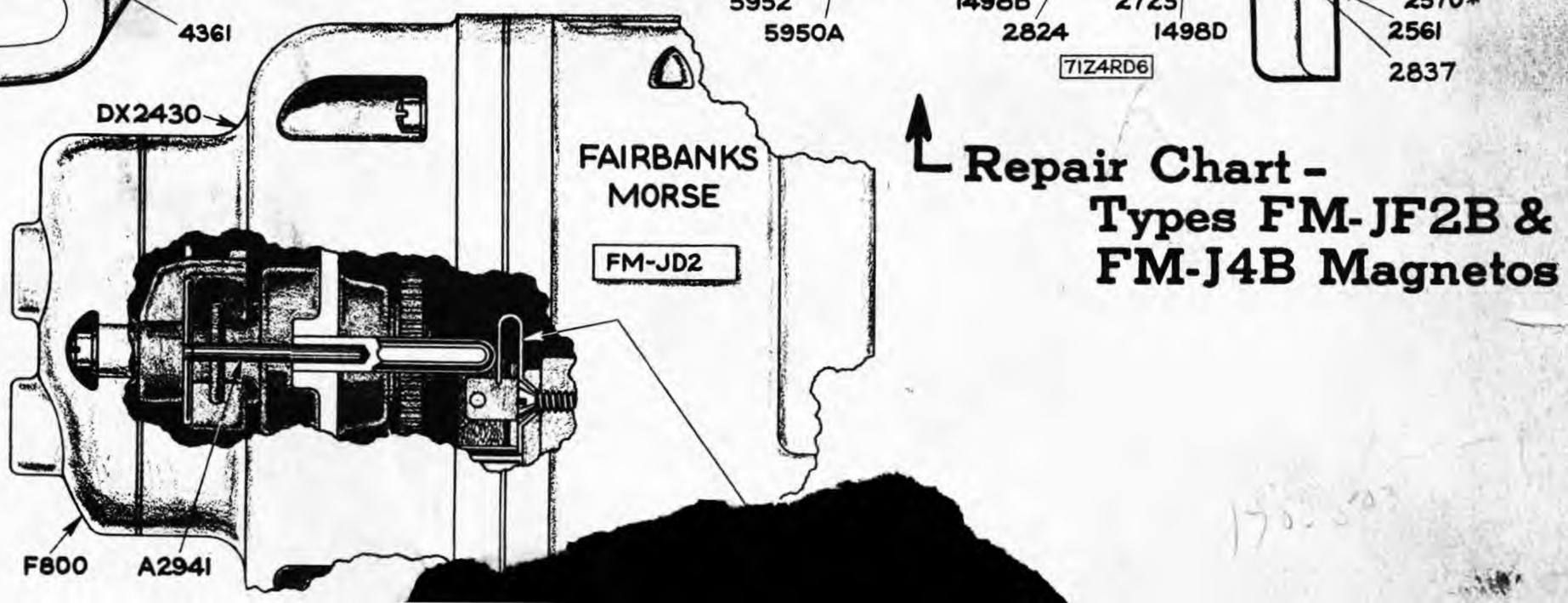

Repair Chart - Types FM-JF2B & FM-J4B Magnetos

FAIRBANKS-MORSE TYPE FM-J MAGNETOS

Identification Number	Order By Part Number	Name of Part - Unless otherwise specified, part is for base and flange mounting, CW or CCW rotation magnetos.	List Price Each	No. Used FMJ1A FMJ1B	No. Used FMJ2A FMJ2B	No. Used FMJF2A FMJF2B	No. Used FMJ4A FMJ4B	Symbol (For factory use only)
2430	AX2430	End Cap	$1.50	1	. . .	. . .	. . .	ZRD2430B4
	BX2430	Distributor End Cap	2.05	. . .	1	. . .	. . .	Z2RD2430D5
	CX2430	Distributor End Cap	1.50	. . .	. . .	1	1	Z4RD2430F11
	FX2430	Distributor End Cap (FM-J4B14)	1.55	. . .	. . .	. . .	1	Z4RD2430H
	JX2430	End Cap (with push button switch)	2.65	1	. . .	. . .	. . .	2430Z4RD1
		2430 Always includes:						
		High Tension Lead Insert (nfs)	. . .	1	. . .	. . .	. . .	ZRD5072E1
		Switch Assembly (JX2430) (See A2514F)	. . .	1	. . .	. . .	. . .	4373ZRD1
		Brush Holder Inserts (nfs)	. . .	. . .	2	. . .	. . .	Z2RD2469C1
		High Tension Lead Assembly (nfs)	. . .	. . .	1	. . .	. . .	2505Z2RD1
		End Cap Cover Screw Inserts (nfs)	. . .	. . .	. . .	2	2	Z4RD6039A4
		Distributor Shaft Bearing (See B5950C)	. . .	. . .	. . .	1	1	Z4RD2663B
		Timing Instruction Sticker (BF2329)	. . .	. . .	. . .	1	1	BF2329
2430C	A2430C	Distributor End Cap Assembly	3.00	. . .	. . .	. . .	1	2430Z4RD1
		A2430C Always includes:						
		Dist. End Cap (See CX2430)	. . .	. . .	. . .	. . .	1	Z4RD2430F11
		Dist. Shaft Snap Ring (See D1498)	. . .	. . .	. . .	. . .	1	Z4RD1498D
		Dist. Shaft Cork Washer (See E2501)	. . .	. . .	. . .	. . .	1	Z4RD2501B
		Dist. Shaft Flat Washer (See B2665)	. . .	. . .	. . .	. . .	1	Z4RD2665D2
		Dist. Bearing Seal Flat Washer (See A2665A)	. . .	. . .	. . .	. . .	1	Z4RD2665E
		Dist. Shaft and Gear (See N5939)	. . .	. . .	. . .	. . .	1	5943Z4RD9
	10S10A	End Cap Screw (#10-24x5/8")	.08/10	4	. . .	. . .	. . .	11FM8BX
	10S14A	End Cap Screw (#10-24x7/8")	.08/10	. . .	4	4	4	11FM8BX
	10LW2	End Cap Screw Lockwasher (#10)	.05/10	4	4	4	4	11FM1AP
2431A	. . .	Coupling Pawl Stop Screw - See Impulse Coupling Price List No. 9835A.						
2433	M2433	Condenser Assembly	1.05	1	1	1	1	2433Z4RD2
		M2433 Always includes:						
		Insulated Lead Wire (nfs)	. . .	1	1	1	1	. . . . .
		Lead Wire Terminal (See A4361)	. . .	1	1	1	1	ZRB4361A
	8S5N	Condenser Mounting Screw (#8-32x5/16")	.07/10	1	1	1	1	11FM12AX
	8LW3	Condenser Mounting Screw Lockwasher (#8)	.05/10	1	1	1	1	11FM1AP
2437	R2437	Breaker Arm, Sta'y Bracket & Point Set (CW)	1.75	1-CW	1-CW	1-CW	1-CW	2437Z4RD7
	S2437	Breaker Arm, Sta'y Bracket & Point Set (CCW)	1.75	1-CCW	1-CCW	1-CCW	1-CCW	2437Z4RD7
		2437 Always includes:						
		Breaker Arm (nfs)	. . .	1	1	1	1	Z4RD2437A4
		Breaker Arm Spring (nfs)	. . .	1	1	1	1	Z4RD2443C6
		Breaker Arm Contact Point (nfs)	. . .	1	1	1	1	Z4RD2445A4
		Breaker Arm Contact Point Washer (nfs)	. . .	1	1	1	1	Z4RD2755A
		Breaker Arm Lead (nfs)	. . .	1	1	1	1	Z4RD982A
		Cam Felt Wick (See E2788)	. . .	1	1	1	1	Z4RD2788C2
		Sta'y Bracket with Point - CW (See G2454)	. . .	1-CW	1-CW	1-CW	1-CW	2453Z4RD4
		Sta'y Bracket with Point - CCW (See H2454)	. . .	1-CCW	1-CCW	1-CCW	1-CCW	2453Z4RD3
	8S5N	Breaker Arm Terminal Screw (#8-32x5/16")	.07/10	1	1	1	1	11FM12AX
	8LW3	Breaker Arm Terminal Screw Lockwasher (#8)	.05/10	1	1	1	1	11FM1AP
2454	G2454	Stationary Bracket with Point (CW)	.60	1-CW	1-CW	1-CW	1-CW	2453Z4RD4
	H2454	Stationary Bracket with Point (CCW)	.60	1-CCW	1-CCW	1-CCW	1-CCW	2453Z4RD3
		2454 Always includes:						
		Sta'y Point Bracket - CW (nfs)	. . .	1-CW	1-CW	1-CW	1-CW	Z2RD2453C2
		Sta'y Point Bracket - CCW (nfs)	. . .	1-CCW	1-CCW	1-CCW	1-CCW	Z2RD2453B2
		Primary Insulating Bushing (nfs)	. . .	1	1	1	1	Z4RD2501A2
		Primary Insulating Washer (nfs)	. . .	1	1	1	1	Z4RD6018A1
		Primary Contact Screw Bushing (nfs)	. . .	1	1	1	1	Z4RD2731A5
		Primary Contact Screw Washer (nfs)	. . .	1	1	1	1	Z4RD2458A
		Primary Contact Insulator (nfs)	. . .	1	1	1	1	Z4RD2459C3
		Primary Contact Point (nfs)	. . .	1	1	1	1	Z4RD2454A6
	8S5N	Stationary Bracket Mounting Screw (8-32x5/16")	.07/10	1	1	1	1	11FM12AX
2455	C2455	Sta'y Bracket Eccentric Adjustment Screw	.11	1	1	1	1	Z4RD2455A3
2460A	D2460A	Distributor Brush (In Pairs Only)	.26pr.	. . .	2	. . .	. . .	Z4RB2267C1
		D2460A Always incl[illegible]						
		Distributor Brus[illegible] (nfs)	. . .	. . .	2	. . .	. . .	Z4RB3967B
2460B	E2460B	Coil Lead Bru[illegible]	. . .	. . .	1	1	1	Z4RD2267A3
		E2460B Al[illegible]						

Repair Price List **FAIRBANKS-MORSE TYPE FM-J MAGNETOS**

Identification Number	Order By Part Number	Name of Part - Unless otherwise specified, part is for base or flange mounting, CW or CCW rotation magnetos.	List Price Each	No. Used FMJ1A FMJ1B	FMJ2A FMJ2B	FMJF2A FMJF2B	FMJ4A FMJ4B	Symbol (For factory use only)
2477	G2477	Coil Assembly (Complete)	$5.90	. . .	1	1	1	4051Z4RD11
	L2477	Coil Assembly (Complete)	5.80	1	. . .	. . .	. . .	4051ZRD8
		2477 Always includes:						
		Coil Winding . . . . . (nfs)	. . .	. . .	1	1	1	2477Z4RD6
		Coil Winding . . . . . (nfs)	. . .	1	. . .	. . .	. . .	2477ZRD1
		Coil Secondary Terminal . . . . . (nfs)	. . .	. . .	1	1	1	Z4RD6120F
		Coil Secondary Terminal . . . . . (nfs)	. . .	1	. . .	. . .	. . .	Z4RD6120D3
		Coil Secondary Lead Shield . . . (nfs)	. . .	1	1	1	1	Z4RD2930A
		Coil Tape - Wide . . . . . (nfs)	. . .	5	5	5	5	Z4RD2716A1
		Coil Tape - Narrow . . . . . (nfs)	. . .	3	3	3	3	ZRA3373A2
		Coil Sticking Tape . . . . . (nfs)	. . .	1	1	1	1	Z4RD3373A
		Coil Bridge Lamination Assembly . (nfs)	. . .	1	1	1	1	2486Z2RD6
		Coil Primary Lead Wire . . . . . (nfs)	. . .	1	1	1	1	Z4RD2499A1
		Coil Primary Lead Wire Tube .(See E2736)	. . .	1	1	1	1	Z4RD2736A
		Coil Primary Lead Wire Terminal(See A4361)	. . .	1	1	1	1	ZRB4361A1
	25SS12A	Coil Bridge Set Screw . . . (1/4"-20x3/4")	.24/10	2	2	2	2	11FM19A
2480	AX2480	Magnetic Rotor (Standard 360°)	5.60	1	. . .	. . .	. . .	2475ZRD13
	BX2480	Magnetic Rotor (Standard 180°)	5.70	. . .	1	. . .	. . .	2475Z2RD5
	CX2480	Magnetic Rotor (Standard 180°)	6.75	. . .	. . .	. . .	1	2475Z4RD31
	DX2480	Magnetic Rotor (FMJ1A2/J1A10C)	5.70	1	. . .	. . .	. . .	2475ZRD14
	EX2480	Magnetic Rotor (FMJ4B13)	6.80	. . .	. . .	. . .	1	2475Z4RD30
	FX2480	Magnetic Rotor (FMJ1B13)	5.90	1	. . .	. . .	. . .	2475ZRD23
	HX2480	Magnetic Rotor (Standard 360°)	8.75	. . .	. . .	1	. . .	2475Z4RD32
	MX2480	Magnetic Rotor (FMJ2B8)	7.40	. . .	1	. . .	. . .	2475Z2RD7
	RX2480	Magnetic Rotor (FMJ2B13)	6.20	. . .	1	. . .	. . .	2475Z2RD8
		2480 Always includes:						
		Rotor Shaft - AX2480 . . . . . .(nfs)	. . .	1	. . .	. . .	. . .	ZRD2480C7
		Rotor Shaft - BX2480 . . . . . .(nfs)	. . .	. . .	1	. . .	. . .	Z2RD2480B9
		Rotor Shaft - CX2480 . . . . . .(nfs)	. . .	. . .	. . .	. . .	1	Z4RD2480M8
		Rotor Shaft - DX2480 . . . . . .(nfs)	. . .	1	. . .	. . .	. . .	ZRD2480D5
		Rotor Shaft - EX2480 . . . . . .(nfs)	. . .	. . .	. . .	. . .	1	Z4RD2480K11
		Rotor Shaft - FX2480 . . . . . .(nfs)	. . .	1	. . .	. . .	. . .	ZRD2480F7
		Rotor Shaft - HX2480 . . . . . .(nfs)	. . .	. . .	. . .	1	. . .	Z4RD2480P6
		Rotor Shaft - MX2480 . . . . . .(nfs)	. . .	. . .	1	. . .	. . .	Z2RD2480F7
		Rotor Shaft - RX2480 . . . . . .(nfs)	. . .	. . .	1	. . .	. . .	Z2RD2480G6
		Rotor Magnets . . . . . .(nfs)	. . .	2	2	2	2	Z2RD2475C4
		Rotor Lamination Assembly . . . . .(nfs)	. . .	2	2	2	2	2485Z2RD4
		Rotor Die Casting - AX2480 . . . .(nfs)	. . .	1	. . .	. . .	. . .	ZRD2482H2
		Rotor Die Casting - BX2480 . . . .(nfs)	. . .	. . .	1	. . .	. . .	Z2RD2482D3
		Rotor Die Casting - CX2480 . . . .(nfs)	. . .	. . .	. . .	. . .	1	Z4RD2482U1
		Rotor Die Casting - DX2480 . . . .(nfs)	. . .	1	. . .	. . .	. . .	ZRD2482J1
		Rotor Die Casting - EX2480 . . . .(nfs)	. . .	. . .	. . .	. . .	1	Z4RD2482S6
		Rotor Die Casting - FX2480 . . . .(nfs)	. . .	1	. . .	. . .	. . .	ZRD2482T2
		Rotor Die Casting - HX2480 . . . .(nfs)	. . .	. . .	. . .	1	. . .	Z4RD2482V1
		Rotor Die Casting - MX2480 . . . .(nfs)	. . .	. . .	1	. . .	. . .	Z2RD2482F5
		Rotor Die Casting - RX2480 . . . .(nfs)	. . .	. . .	1	. . .	. . .	Z2RD2482G3
		Rotor Gear . . . . . (See F5952)	. . .	. . .	. . .	1	1	Z4RD5952D2
		Rotor Gear Pin . . . . . (See F2533)	. . .	. . .	. . .	1	1	Z4RD2533C2
		Rotor Gear Snap Ring . . . (See A1498E)	. . .	. . .	. . .	1	1	Z4RD1498D1
2492	C2492	Inner Retaining Washer	.25/10	1	1	1	1	Z4RD2492A2
2492A	A2492A	Outer Retaining Washer	.06	1	1	1	1	Z4RD2492B1
2493	C2493	Bearing Insulating Washer	.15/10	2	2	2	2	ZRB2493A
2498	H2498	End Cap to Frame Gasket	.06	1	1	1	1	Z2RD2498B1
2499A	B2499A	Primary Terminal Wire Assembly(CCW-7"Long)	.24	1-CCW	1-CCW	1-CCW	1-CCW	2499Z4RD2
	D2499A	Primary Terminal Wire Assembly(CW-5"Long) .	.18	1-CW	1-CW	1-CW	1-CW	2499Z4RD3
		2499A Always includes:						
		Primary Terminal Wire - CCW . . . (nfs)	. . .	1-CCW	1-CCW	1-CCW	1-CCW	Z4RD2499C
		Primary Terminal Wire - CW . . . (nfs)	. . .	1-CW	1-CW	1-CW	1-CW	Z4RD2499B2
		Primary Wire Tube - CCW . . (See E2736B)	. . .	1-CCW	1-CCW	1-CCW	1-CCW	Z4RD2736C
		Primary Wire Tube - CW . . (See G2736B)	. . .	1-CW	1-CW	1-CW	1-CW	Z4RD2736B2
		Primary Wire Terminal - #8 (See A4361)	. . .	1	1	1	1	ZRB4361A1
		Primary Wire Terminal - #6 (See A4361A)	. . .	1	1	1	1	ZRD4361A
2501	E2501	Distributor Shaft Seal Washer	.06	. . .	. . .	. . .	1	Z4RD2501B1
2502	. . .	Coupling Housing Flat Washer - See Impulse Coupling Price List No. 9835A.						

FAIRBANKS-MORSE TYPE FM-J MAGNETOS

Identification Number	Order By Part Number	Name of Part - Unless otherwise specified, part is for base or flange mounting, CW or CCW rotation magnetos.	List Price Each	No. Used FMJ1A FMJ1B	No. Used FMJ2A FMJ2B	No. Used FMJF2A FMJF2B	No. Used FMJ4A FMJ4B	Symbols (For factory use only)
2533	F2533	Rotor Pinion Pin . . . . . (F2533 used on FM-J4 after Serial #370550)	$0.25/10	. . .	. . .	1	1	Z4RD2533C2
2561	A2561	Demountable Flange Plate (Standard SAE) . . .	1.20	1	1	1	1	Z2RD2561A3
	B2561	Demountable Flange Plate (FMJ1B2)	1.20	1	. . .	. . .	. . .	Z2RD2561C3
	C2561	Demountable Flange Plate (FMJ1B2A/J1B2B) . .	1.20	1	. . .	. . .	. . .	ZRD2561G1
	D2561	Demountable Flange Plate (FMJ2B14)	1.20	. . .	1	. . .	. . .	Z2RD2561B
	H2561	Demountable Flange Plate (FMJ4B14)	1.20	. . .	. . .	. . .	1	Z2RD2561G
2561A	A2561A	Demountable Base Plate (Standard SAE)	1.20	1	1	1	1	ZRD2561D4
	B2561A	Demountable Base Plate (FMJ1A2)	1.20	1	. . .	. . .	. . .	ZRD2561B1
	D2561A	Demountable Base Plate (FMJ1A15)	1.20	1	. . .	. . .	. . .	ZRD2561H3
	E2561A	Demountable Base Plate (FMJ1A13)	1.20	1	. . .	. . .	. . .	ZRD2561M1
	G2561A	Demountable Base Plate (FMJ4A9)	1.20	. . .	. . .	. . .	1	Z4RD2561D1
	25S8G	Flange Plate Screw . . . . . (1/4"-20x1/2")	.15/10	4	4	4	4	11FM11CX
	25S10G	Flange Plate Screw B & C2561. (1/4"-20x5/8")	.15/10	4	. . .	. . .	. . .	11FM11CX
	25S12G	Base Plate Screw . . . . . (1/4"-20x3/4")	.15/10	2	2	2	2	11FM11CX
2563	. . . .	Impulse Coupling Hub Assembly . .)						
2563C	. . . .	Impulse Coupling - Complete . . .)						
2564	. . . .	Impulse Coupling Gear Pin . . . .)						
2565	. . . .	Impulse Coupling Drive Spring . .)						
2568	. . . .	Impulse Coupling Pawl Stop . . .)						
2570	. . . .	Impulse Coupling Shaft Nut . . .)						

See Impulse Coupling Price List No. 9835A.

2624	A2624	Magnetic Rotor Drive Shaft Extension . . . . (A2624 was used on Type FM-J2B8 magnetos only, previous to the adoption of the one-piece rotor shaft.)	1.75	. . .	1	. . .	. . .	Z2RD2624A4
2665	B2665	Distributor Shaft Flat Washer	.25/10	. . .	. . .	1	1	Z4RD2665D2
2665A	A2665A	Distributor Bearing Flat Washer	.25/10	. . .	. . .	1	1	Z4RD2665E
2669	A2669	Distributor Disc Locating Pin	.09	. . .	1	. . .	. . .	Z2RD2669A3
2671	A2671	Extension Shaft Housing (FM-J2B8) . . . . . A2671 Always includes:	2.95	. . .	1	. . .	. . .	Z2RD2671A6
		Extension Shaft Bearing . . . (See A5950D)	. . .	. . .	1	. . .	. . .	Z2RD2663A6
		(When A2671 is ordered for Type FM-J2B8 previous to the adoption of the one-piece rotor shaft, two A5950D Bearings are required as shown in the repair chart on page 2.)						
	25S10G	Extension Shaft Housing Screws (1/4"-20x5/8")	.15/10	. . .	4	. . .	. . .	11FM11CX
2723	C2723	Rotor Bearing Shim	.15/10	2	2	2	2	Z2RB2723C3
2736	E2736	Primary Lead Wire Tube	.11	1	1	1	1	Z4RD2736A
2736B	E2736B	Primary Terminal Wire Tube (CCW) - 7" Long .	.13	1-CCW	1-CCW	1-CCW	1-CCW	Z4RD2736B1
	G2736B	Primary Terminal Wire Tube (CW) - 5" Long . .	.09	1-CW	1-CW	1-CW	1-CW	Z4RD2736C
2741	A2741	Cable Outlet Knobs (FM-J4A7/J4A7A) . . . . . A2741 Always includes:	.24	. . .	. . .	. . .	4	Z4RD2741A
		Cable Outlet Knob Insert . . . . . (nfs)	. . .	. . .	. . .	. . .	4	Z4RD2742A
2765	M2765	Distributor Rotor	.60	. . .	. . .	1	1	Z4RD2765E8
	N2765	Distributor Disc	1.55	. . .	1-CCW	. . .	. . .	Z2RD2765B2
	P2765	Distributor Disc . . . . . 2765 Always includes:	1.55	. . .	1-CW	. . .	. . .	Z2RD2765E1
		Distributor Rotor Insert . . . . . (nfs)	. . .	. . .	. . .	1	1	Z4RD4495A
		Distributor Disc Contact Insert . . (nfs)	. . .	. . .	1	. . .	. . .	Z4RD4495B1
		Distributor Disc Shaft Insert . . . (nfs)	. . .	. . .	1	. . .	. . .	Z2RD2622B3
		Distributor Disc Locating Pin .(See A2669)	. . .	. . .	1	. . .	. . .	Z2RD2669A3
2788	E2788	Rotor Cam Felt Wick	.06	1	1	1	1	Z4RD2788C2
	6S6A	Cam Felt Wick Screw . . . . . (#6-32x3/8")	.05/10	1	1	1	1	11FM8BX
	6LW2	Cam Felt Wick Screw Lockwasher . . . . (#6)	.05/10	1	1	1	1	11FM1AP
2824	B2824	Rotor Bearing Insulating Strip	.10/10	1	1	1	1	ZRD2824A1
2837	A2837	Demountable Flange Gasket	.06	1	1	1	1	Z2RD2837A
2982	A2982	Cam Felt Wick Spacer	.06	1	1	1	1	Z4RD2982A
3861	G3861	Bearing Seal Rubber Washer	.14	1	1	1	1	Z4RD3861D1
4361	A4361	Lead Wire Terminal (#8 Screw)	.25/10	3	3	3	3	ZRB4361A
4361A	A4361A	Lead Wire Terminal (#6 Screw)	.25/10	1	1	1	1	ZRD4361A

FAIRBANKS-MORSE TYPE FM-J MAGNETOS

Identification Number	Order By Part Number	Name of Part - Unless otherwise specified, part is for base or flange mounting, CW or CCW rotation magnetos.	List Price Each	No. Used FMJ1A FMJ1B	FMJ2A FMJ2B	FMJF2A FMJF2B	FMJ4A FMJ4B	Symbols (For factory use only)
		Breaker Arm Fulcrum Pin . . . . . (nfs)	. . .	1	1	1	1	Z4RD2447C
		Cam Felt Wick . . . . . (See E2788)	. . .	1	1	1	1	Z4RD2788C2
		Cam Felt Wick Spacer . . . . (See A2982)	. . .	1	1	1	1	Z4RD2982A
		Cam Felt Wick Washer . . . . (See C6502)	. . .	1	1	1	1	ZRA2458A1
		Cam Felt Wick Screw . . . . . (See 6S6A)	. . .	1	1	1	1	11FM8BX
		Cam Felt Wick Screw Lockwasher (See 6LW2)	. . .	1	1	1	1	11FM1AP
		Rotor Shaft Oilite Bearing . .(See B5950A)	. . .	1	1	1	1	Z2RD5950A2
	8S6G	Bearing & Breaker Plate Screw (#8-32x3/8")	.07/10	4	4	4	4	11FM11CX
5408	A5408	Rotor Pinion Nut	.12	. . .	. . .	. . .	1	Z4RD5408A
	37LW1	Rotor Pinion Nut Lockwasher . . . . (3/8")	.05/10	. . .	. . .	. . .	1	11FM1A
		(A5408 & 37LW1 were used on Type FM-J4 up to Serial #370550)						
5931B	. . . .	Impulse Coupling Shaft Nut Lockwasher - See Impulse Coupling Price List No. 9835A.						
5931D	A5931D	Follower Gear Lock Pin (FMJ2B8)	.06	. . .	1	. . .	. . .	Z2RD5931A
5931E	A5931E	Flange Plate Set Screw (CW)	.21	1-CW	1-CW	1-CW	1-CW	ZRD5931A
	B5931E	Flange Plate Set Screw (CCW)	.21	1-CCW	1-CCW	1-CCW	1-CCW	ZRD5931B
5939	N5939	Distributor Shaft and Gear Assembly	1.35	. . .	. . .	1	1	5943Z4RD9
		N5939 Always includes:						
		Distributor Shaft . . . . . (nfs)	. . .	. . .	. . .	1	1	Z4RD5939D8
		Distributor Gear . . . . . (nfs)	. . .	. . .	. . .	1	1	Z4RD5943D
		Distributor Gear Washer . . . . . (nfs)	. . .	. . .	. . .	1	1	Z4RD2665D2
		Distributor Gear End Washer . . . (nfs)	. . .	. . .	. . .	1	1	Z4RD2665F1
5949	C5949	Rotor Shaft Ball Bearing (Drive End)	1.35	1	1	1	1	Z4RD5949A
5950A	B5950A	Rotor Shaft Sleeve Bearing (Oilite)	.30	1	1	1	1	Z2RD5950A2
5950C	B5950C	Distributor Shaft Sleeve Bearing (Oilite) .	.24	. . .	. . .	1	1	Z4RD2663B
5950D	A5950D	Drive Shaft Sleeve Bearing (Oilite) FMJ2B8 .	.41	. . .	1	. . .	. . .	Z2RD2663A6
		Note - Two A5950D Bearing should be used on Type FMJ2B8 magnetos which have two piece rotor shafts, as shown in the repair charts on page 2.						
5952	F5952	Rotor Pinion	.35	. . .	. . .	1	1	Z4RD5952D2
5957	. . . .	Impulse Coupling Shell . . . . .)						
5963	. . . .	Impulse Coupling Pawl Spring . . . . .) See Impulse Coupling Price List No. 9835A.						
5968	. . . .	Impulse Coupling Housing Felt Washer . .)						
5969	B5969	Stationary Contact Support Washer	.05/10	1	1	1	1	Z4RD5969A1
6030A	B6030A	Ventilator Screen Washer (FMJ2B8)	.24	. . .	1	. . .	. . .	Z2RD6030A
6032B	B6032B	Ventilator Screen (FMJ2B8)	.07	. . .	1	. . .	. . .	Z2RD6032B
	6S6N	Ventilator Screen Washer Screw (#6-32x3/8")	.05/10	. . .	1	. . .	. . .	11FM12AX
	6LW1	Ventilator Screen Screw Lockwasher . . (#6)	.05/10	. . .	1	. . .	. . .	11FM1AX
6032BC	B6032BC	Ventilator Screen Group	.32	. . .	1	. . .	. . .	. . . . .
		B6032BC Always includes:						
		Ventilator Screen . . . . . (See B6032B)	. . .	. . .	1	. . .	. . .	Z2RD6032B
		Ventilator Screen Washer . . (See B6030A)	. . .	. . .	1	. . .	. . .	Z2RD6030A
		Ventilator Screen Washer Screw (See 6S6N)	. . .	. . .	1	. . .	. . .	11FM12AX
		Ventilator Screen Screw Lkwr. (See 6LW1)	. . .	. . .	1	. . .	. . .	11FM1AX
6222	. . . .	Coupling Housing Cupped Washer Screw - See Impulse Coupling Price List No. 9835A.						
6231	A6231	Hold Down Arm (FMJ2B8)	.35	. . .	1	. . .	. . .	Z4RD6231A2
	10S18A	Hold Down Arm Screw (FMJ2B8)(#10-24x1-1/8")	.10/10	. . .	1	. . .	. . .	11FM8BX
	10N1	Hold Down Arm Screw Nut (FMJ2B8) . (#10-24)	.10/10	. . .	1	. . .	. . .	11FM31AX
6503	C6503	Rotor Cam Felt Wick Holder	.15/10	1	1	1	1	ZRA2458A
GK16	GK16	Complete Gasket & Washer Kit	.21	1	1	. . .	. . .	. . . . .
		GK16 Always includes:						
		Outer Retaining Washer . . . (See A2492A)	. . .	1	1	. . .	. . .	Z4RD2492B1
		End Cap to Frame Gasket . . (See H2498)	. . .	1	1	. . .	. . .	Z2RD2498B1
		Bearing Seal Rubber Washer . (See G3861)	. . .	1	1	. . .	. . .	Z4RD3861D1
GK17	GK17	Complete Gasket & Washer Kit	.31	. . .	. . .	1	1	. . . . .
		GK17 Always includes:						
		Dist. Compartment Cover Gasket (See B682)	. . .	. . .	. . .	1	1	Z4RD682A1
		Outer Retaining Washer . . . (See A2492A)	. . .	. . .	. . .	1	1	Z4RD2492B1
		End Cap to Frame Gasket . . .(See H2498)	. . .	. . .	. . .	1	1	Z2RD2498B1
		Dist. Shaft Seal Cork Washer .(See E2501)	. . .	. . .	. . .	1	1	Z4RD2501B
		Bearing Seal Rubber Washer . .(See G3861)	. . .	. . .	. . .	1	1	Z4RD3861D1

SPECIAL PARTS-TYPES FM-JD2, FM-JD2A & FM-JD2B MAGNETOS

Types FM-JD2, FM-JD2A and FM-JD2B are of the 180-540° spark interval design and were built especially to replace original magneto equipment on John Deere tractors. These models have been withdrawn from factory production.

Parts listed below are for CCW rotation magnetos only. Parts other than those listed below must be located in the regular list, since such parts are identical to those used on standard Type FM-J4 magnetos. These parts are shown on the repair chart on page 3.

Identification Number	Order By Part Number	Name of Part - All parts listed are for CCW rotation magnetos and are used in place of corresponding parts shown in the regular list.	List Price Each	No. Used FMJD2 Base	No. Used FMJD2A Flange	No. Used FMJD2B Flange	Symbols (For factory use only)
800	F800	Distributor Compartment Cover	$1.75	1	1	1	Z4RD800C
		F800 Always includes:					
		Cable Outlet Inserts (nfs)	....	2	2	2	Z4RD2469C
		High Tension Lead Assembly (nfs)	....	1	1	1	2505Z4RD5
2430	DX2430	Distributor End Cap Assembly	2.00	1	1	1	2430Z2RD1
		DX2430 Always includes:					
		Distributor End Cap (nfs)	....	1	1	1	Z2RD2430E1
		Spark Gap Grounding Post (nfs)	....	1	1	1	Z2RD983D
		End Cap Cover Screw Inserts (nfs)	....	1	1	1	Z4RD6039A5
		Spark Gap Collector Assembly (A2941)	....	1	1	1	2941Z2RD3
		Distributor Shaft Bearing (B5950C)	....	1	1	1	Z4RD2663B
		Timing Instruction Sticker (BF2329)	....	1	1	1	BF2329
2480	CX2480	Magnetic Rotor (Same as used on Type FM-J4)	6.75	1	1	...	2475Z4RD31
	PX2480	Magnetic Rotor (Extended Shaft)	7.15	...	...	1	2475Z4RD26
		2480 Always includes:					
		Rotor Shaft (nfs)	....	1	1	...	Z4RD2480M4
		Rotor Shaft (nfs)	....	...	...	1	Z4RD2480Q2
		Rotor Magnets (nfs)	....	2	2	2	Z2RD2475C3
		Rotor Lamination Assembly (nfs)	....	2	2	2	2485Z2RD3
		Rotor Die Casting (nfs)	....	1	1	...	Z4RD2482U1
		Rotor Die Casting (nfs)	....	...	...	1	Z4RD2482W
		Rotor Pinion (F5952)	....	1	1	1	Z4RD5952D
		Rotor Pinion Pin (F2533)	....	1	1	1	Z4RD2533C
		Rotor Pinion Snap Ring (A1498E)	....	1	1	1	Z4RD1498D
2941	A2941	Spark Gap Collector Assembly	.47	1	1	1	2941Z2RD3
		A2941 Always includes:					
		Spark Gap Collector (nfs)	....	1	1	1	Z2RD2941C
		Spark Gap Collector Post (nfs)	....	1	1	1	Z2RD2946B
2947	A2947	Spark Gap Ground Post Contact Spring	.07	1	1	1	Z2RD2947B

INSTRUCTION & REPAIR PRICE LIST REFERENCE -TYPE FM-J MAGNETOS

Magneto Type	Used on Engines	Instr. No.	R.P.L. No.	Description
FMJ1A2/B2/B2A/B2B	Fairbanks-Morse	2850C	9846B	Special mounting and extended rotor shaft
FMJ1A7/J1B7	Wisconsin Motors	2864A	9864	Special mounting, frame and rotor
FMJE1A/JE1B7	Wisconsin Motors	2864A	9864	Special mounting, frame and rotor, radio-shielded
FMJ1A13/B13	Novo	2850C	9846B	Special mounting and rotor
FMJ2A6/B6/B6D	John Deere	2854C	9846B	Special coupling shell on FMJ2B6D
FMJ2B8	Waukesha (Model 150)	2854C	9846B	Special mounting and extended rotor shaft
FMJ2B13	Novo	2854C	9846B	Special rotor shaft
FMJ2B14	Hercules	2854C	9846B	Special mounting, special coupling
FMJH2B70/JHE2B70	Kiekhaefer	2871	9871	Special construction with extended rotor shaft
FMJ4B3/B3A	Allis-Chalmers	2846A	9846B	Type UB1 coupling
FMJ4A7/A7A	Wisconsin Motors	2846A	9846B	Special cable outlets
FMJV4B7/JVE4B7	Wisconsin Motors	2863B	9863B	Four pole magnetic rotor, special construction
FMJE4B8	Waukesha	2867	9867A	Special rotor shaft, radio-shielded
FMJ4B9A	J. I. Case	2846A	9846B	Type UB7 coupling
FMJE4B26	Climax	2867	9867A	Special rotor shaft, radio-shielded
FMJFE2B69	Onan	2867	9867A	Special construction, radio-shielded 2 cyl. 360°

FAIRBANKS, MORSE & CO.

Manufacturers

Executive Offices:
Chicago, Illinois

330442-024705M

Magneto Sales & Factory:
Beloit, Wisconsin

Printed in U.S.A.