Bulletin FM71B

FAIRBANKS-MORSE

SPECIAL SERVICE INFORMATION - TYPE FM-J MAGNETOS

The service instructions of this bulletin apply specifically to the Type FM-J magnetos and cover important differences which must be strictly observed by all Service Stations. See also Instructions No. 2846A, 2850C, 2854C, 2863C, 2864A, Repair Price List No. 9846B, and Repair Parts List No. 9863B.

The full type designation of the magneto should first be accurately determined by reference to the stamping on the side of the housing. Variations of the Type FM-J magnetos such as the Types FM-JE (radio-shielded) or FM-JV (four pole) are also covered in part by this bulletin.

PART ONE - REPLACEMENT OF ROTOR SLEEVE BEARING

The rotor sleeve bearing is located in the bearing plate (4631). Made of porous Oilite bronze, this bearing has a large reserve lubricant reservoir which assures long continued use without attention. Excess clearance or a pronounced squeal usually indicates the necessity of replacement.

1. Remove the end cap from the magneto and (2 cyl. units) pull the distributor disc off the rotor shaft, or (4 cyl. units) take off the rotor pinion. Dismantle the bearing plate assembly, first taking out the round head terminal screw and freeing the lead wires and breaker spring. After the condenser and breaker arm have been removed, the four flat head screws which hold the plate to the frame may be taken out.

2. Place the bearing plate on the base plate of the hand press with the fulcrum pin up, as shown in Figure 1. Push the tool A (TD2252A) into the sleeve bearing by hand, place the brass cap over its end and apply an even pressure by turning down the press. It is important that the bearing plate be centered over the large hole in the base plate to provide clearance for the bearing as it is pushed out of the plate.

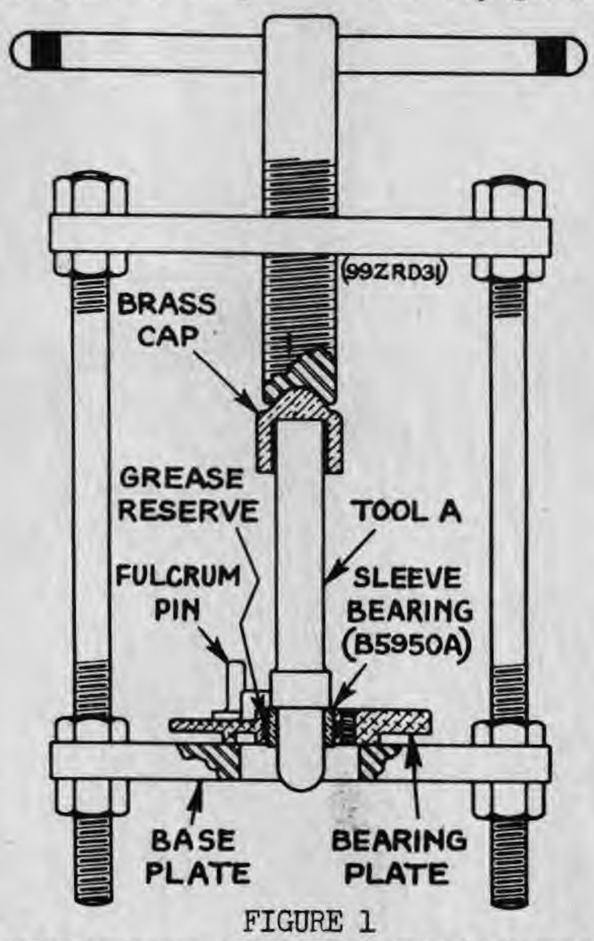

FIGURE 1

3. The bearing plate should now be thoroughly cleaned by immersing it in gasoline, being especially careful to remove any grease remaining in the bearing reservoir. Dry the plate and refill the groove to capacity with the Special FMC04 Sleeve Bearing Grease. No other grease is satisfactory.

4. Push the new sleeve bearing on the end of the tool A and place the bearing plate on the base plate of the press in same position as for removal. Apply an even, gradual pressure and press the new bearing into the plate until the bearing is flush with the breaker side of the plate. The bearing plate should then be wiped entirely free of any excess grease and mounted in the magneto frame, tightening the flat head screws securely.

5. Bearing tool, plate and press must be carefully lined up so that pressure is applied perpendicularly to the bearing plate.

6. After the bearing plate parts have been reassembled, the breaker contact points must be adjusted to have a gap of .020 inch at full separation, that is, when the breaker arm rides the high point of the cam.

PART TWO - REPLACEMENT OF DISTRIBUTOR SLEEVE BEARING

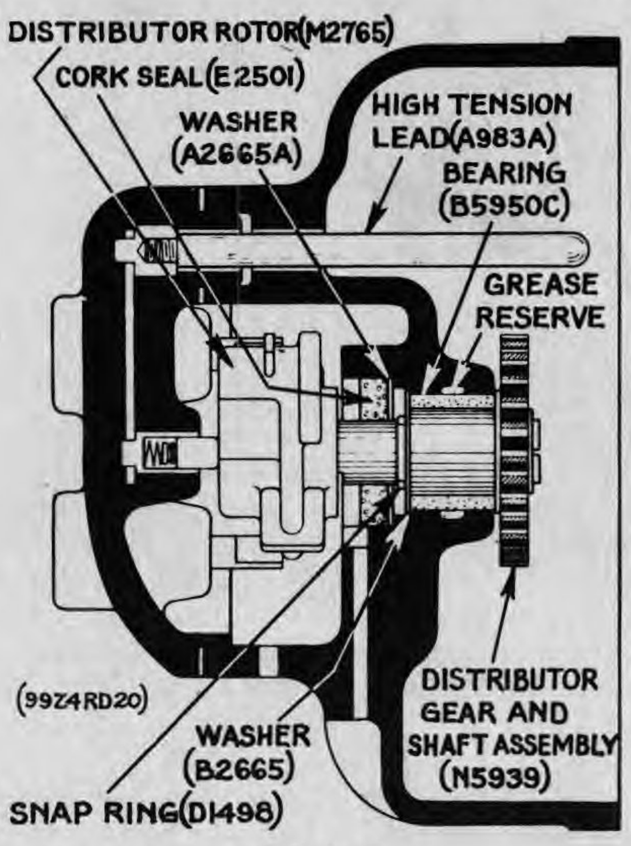

FIGURE 2

The distributor sleeve bearing of the Type FM-J4 magnetos is located in the distributor end cap. This bearing is made of porous Oilite bronze with an ample reservoir for reserve lubricant. Excess clearance or a pronounced squeal in operation indicates the necessity of replacement.

1. The distributor compartment cover should be removed and the interior thoroughly cleaned by wiping with a cloth moistened in carbon tetrachloride. Air inlet and outlet openings at the bottom of the compartment can be cleaned by using an ordinary pipe cleaner.

2. The distributor rotor should be pulled or pried off its shaft. Probably the most convenient method is to use two screwdrivers and carefully lift the molded rotor from opposite sides. The cork sealing washer (E2501) should be removed from its recess, using a knife or sharp tool. Washer (A2665A) can then be taken out and the snap ring (D1498) released, after which the distributor gear and shaft assembly can be withdrawn by pulling from the gear end. The washer (B2665) is then loose in the recess and should be removed.

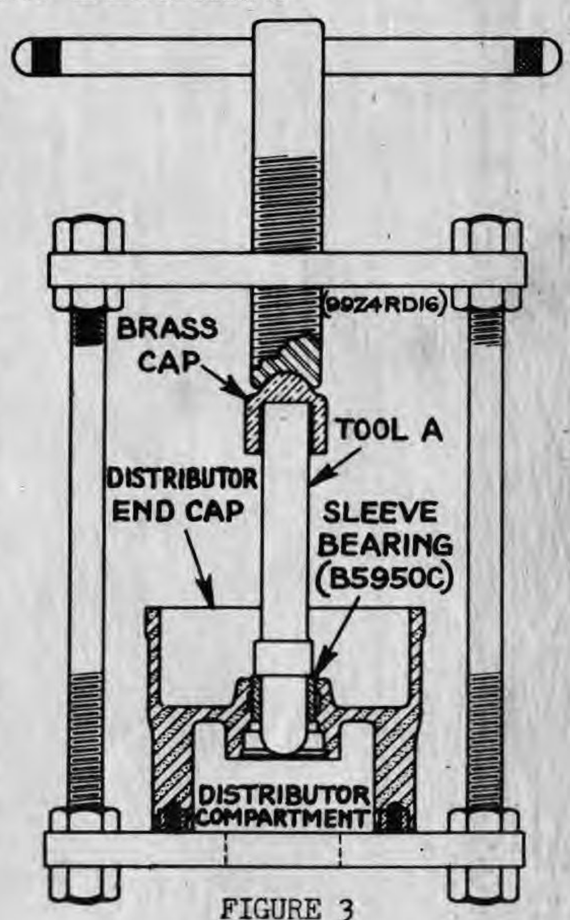

FIGURE 3

3. Place the Bakelite end cap on the base plate of the hand press as shown in Figure 3. For greater support the round distributor compartment should be placed adjacent to the plate. Push tool A by hand as far into the sleeve bearing as possible, put the brass cap over the tool's upper end and turn down the press, exerting an even, perpendicular pressure until the bearing drops out.

4. After cleaning the interior of the bearing recess with a cloth moistened in carbon tetrachloride, the end cap should be placed in the press in the same position as for removal (Par. 3.) The new bearing should then be slipped on the tool A and a liberal quantity of the Special FMC04 Sleeve Bearing Grease applied so that the grease reservoir is completely filled. Press the bearing into the end cap by applying an even pressure until the end is just above (1/64") the surface of the end cap. Wipe off excess grease.

5. Replace the distributor gear and shaft assembly and slip the washer (B2665) on the shaft next to the bearing. Put the snap ring back in its groove and replace the washer (A2665A). The cork sealing washer should then be compressed into the recess to seal the bearing. Replace the distributor rotor by pushing it on the shaft.

Bulletin FM71B
November, 1947
Printed in U.S.A.

File Section-*TYPE FM-J*
SUPERSEDES BULLETIN FM71A

Service Bulletin: Fairbanks-Morse Type FM-J Magnetos

PART THREE - REMOVAL OF TYPE FM-J MAGNETIC ROTORS

IMPORTANT NOTICE - Magnetic rotors should not be removed from the housing of the Type FM-J magnetos unless such removal is essential to the efficient servicing of the magneto. Due to the increased magnetic retentivity of the Alnico magnets as well as to the sealed housing and permanently lubricated drive end bearing, less frequent charging of the rotor and cleaning of the housing are required, thus eliminating from most service work the necessity of removing the rotor. After testing the coil and condenser, and restoring the efficiency of the contact points, the magneto should be fully reassembled and tested before recommendation for remagnetization of the rotor is made.

Rotor removal in the case of the Type FM-J sleeve bearing magnetos can be accomplished only as described in the following instructions and all Authorized Service Stations should thoroughly understand and follow these directions step by step.

1. Drive End Thrust Bearing - In the design of the sleeve bearing Type FM-J magnetos, it has been found desirable to use a lock type thrust ball bearing at the drive end of the rotor shaft. All end play of the rotor is taken up at this bearing, the rotor shaft being a press fit in the ball bearing where it is locked in position by a snap ring. The thrust ball bearing is insulated from the magneto housing and is also locked in place. It should be clear that the rotor shaft snap ring must be released before any attempt is made to drive or press the magnetic rotor out of the frame.

2. Preliminary Steps - The impulse coupling must be removed from the magneto drive shaft. The rotor pinion (4 cylinder units) or distributor disc (2 cylinder units) must first be taken off the end of the rotor shaft, after which the bearing and breaker plate may be dismantled and removed. The magneto will then be in the state shown in Figure 4.

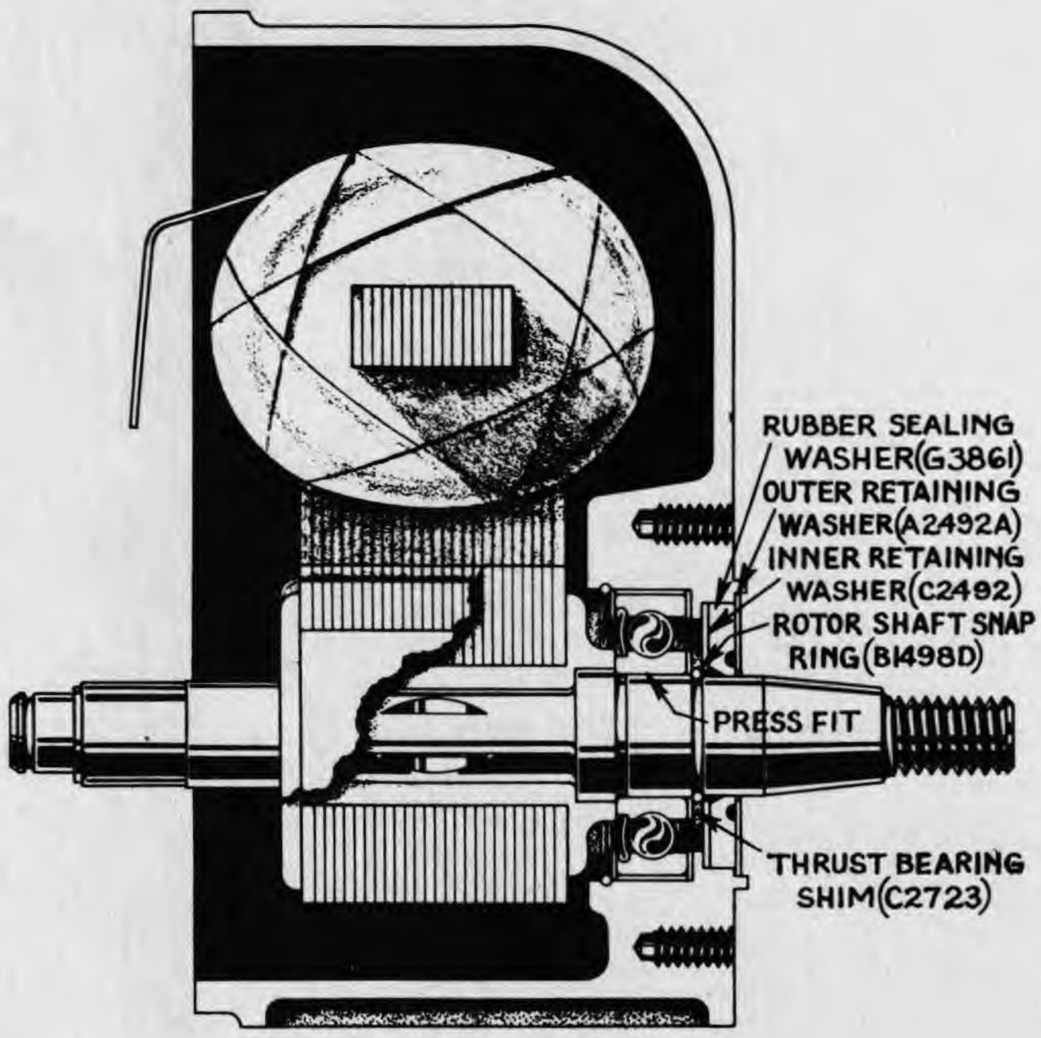

FIGURE 4 - CONSTRUCTION OF DRIVE END

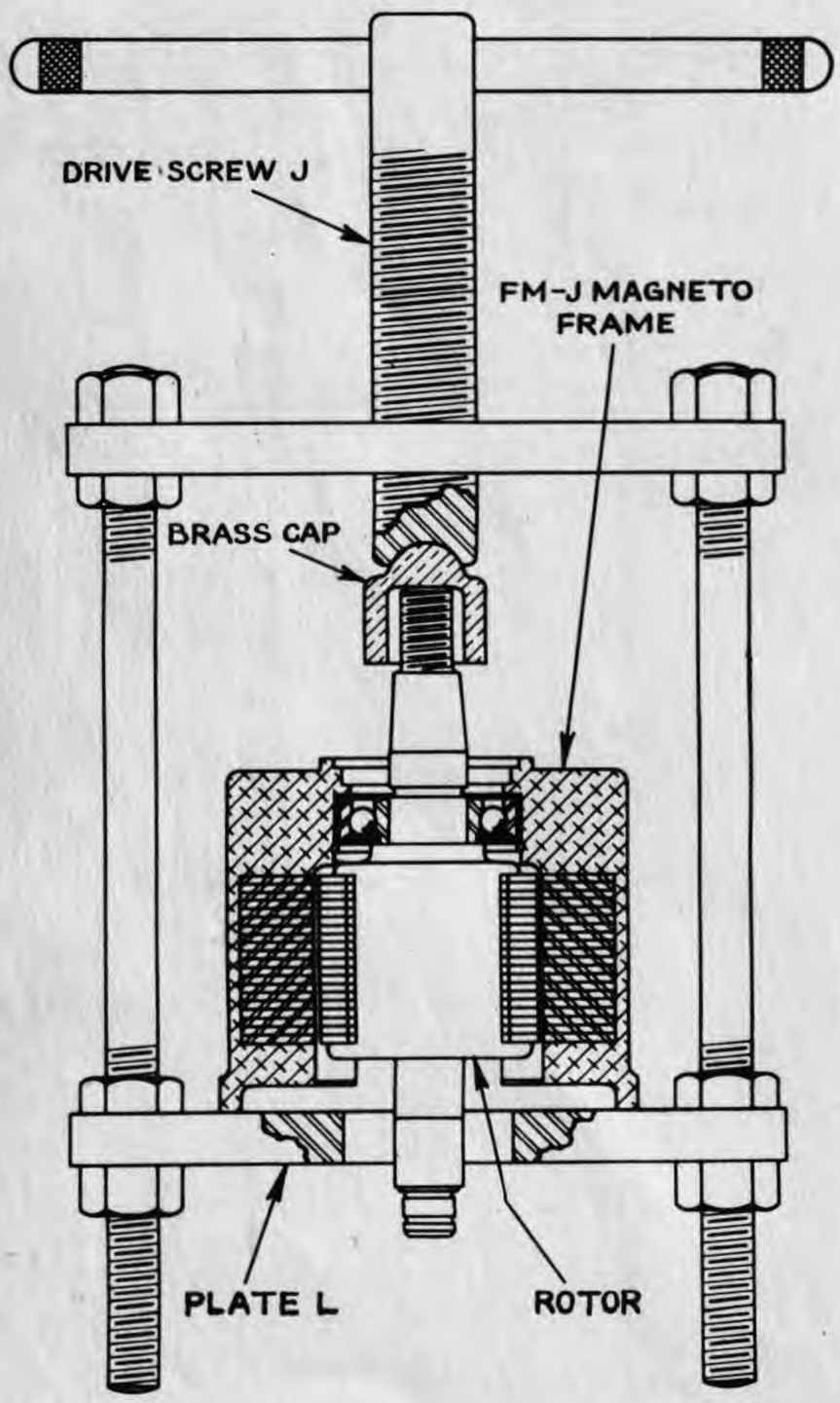

FIGURE 5 - PRESSING ROTOR OUT OF FRAME

3. Releasing Rotor Shaft - The operations necessary to release the rotor shaft from the thrust ball bearing are listed in the order in which they must be performed:

(a) Remove Outer Retaining Washer (A2492A).
Use a punch or blunt screwdriver and strike the washer a sharp blow near the rotor shaft edge. This will dish the washer and permit easy removal. This washer should be discarded.

(b) Remove Rubber Sealing Washer (G3861).
A sharp tool may be used to pry the washer out of the frame recess; if washer has hardened, it should be replaced.

(c) Remove Inner Retaining Washer (C2492).
This washer is a loose fit in the frame recess, but may be difficult to lift out due to adhesion of the bearing grease.

(d) Release Rotor Shaft Snap Ring (B1498D).
A knife or sharp screwdriver can be used to free this snap ring.

(e) Remove Thrust Bearing Shim (C2723).
This shim goes between the snap ring and bearing inner race.

4. Pressing Rotor Out of Frame - After the rotor shaft snap ring has been released, the assembly is placed in the adjustable press as shown in Figure 5. The cam end of the rotor shaft should be carefully centered in the large hole of the base plate L. Then place the brass protective cap over the threaded end of the rotor shaft and apply an even pressure by turning the drive screw J slowly. As soon as the rotor is pressed out of the thrust ball bearing, it may be removed from the magneto frame.

5. Repacking of Ball Bearing - It is considered advisable to clean and repack the thrust ball bearing while the rotor is removed from the frame. See Part Four of this bulletin.

6. Pressing Rotor Into Frame - The magnetic rotor should be pushed by hand partially into place. Put the assembly in the hand press; be certain that the rotor shaft lines up with the opening in the base plate L. Place the brass protective cap over the cam end of the shaft and apply pressure by turning the drive screw J. The rotor shaft should be pressed into the bearing until the snap ring groove appears on the drive side of the bearing.

7. Replacing Drive End Seal - Thrust bearing shim (C2723) should first be slipped over the rotor shaft and snap ring (B1498D) sprung into place. Two shims (C2723) may be necessary for a tightly locked bearing. Retaining washer (C2492) should then be placed in the recess and the rubber sealing washer compressed to seal the bearing. A new outer retaining washer (A2492A) should be fixed in place by upsetting the frame metal at several points along its edge.

PART FOUR - REPLACEMENT OF THRUST BALL BEARING

1. After the rotor has been removed from the magneto housing, careful inspection of the thrust bearing should be made and the bearing cleaned and repacked with FMC03 Special Ball Bearing Grease.

2. Replacement of the ball bearing will seldom be necessary; such replacement should be made only when inspection indicated one or more "frozen" or broken balls, or an excessive amount of axial play.

3. The first step in removing the thrust ball bearing is to release the bearing snap ring (B1498B), although for convenience the bearing insulating washer (C2493) may be pulled out, allowing easier access to the snap ring. Use a sharp screwdriver or knife in prying out the snap ring (Figure 7).

4. Put the magneto housing in the screw press as shown in Figure 6 and place the brass cap over the center of the bearing. Then turn the drive screw down and center the assembly so that pressure is applied evenly to the inner race of the bearing. The bearing is easily pushed out of the housing with this arrangement.

5. After the bearing has been taken out, the insulating strip (B2824) and the second insulating washer (C2493) should be removed and the bearing recess cleaned. In reassembly a new insulating strip and washers should always be used; these must be placed carefully in position before inserting a new bearing.

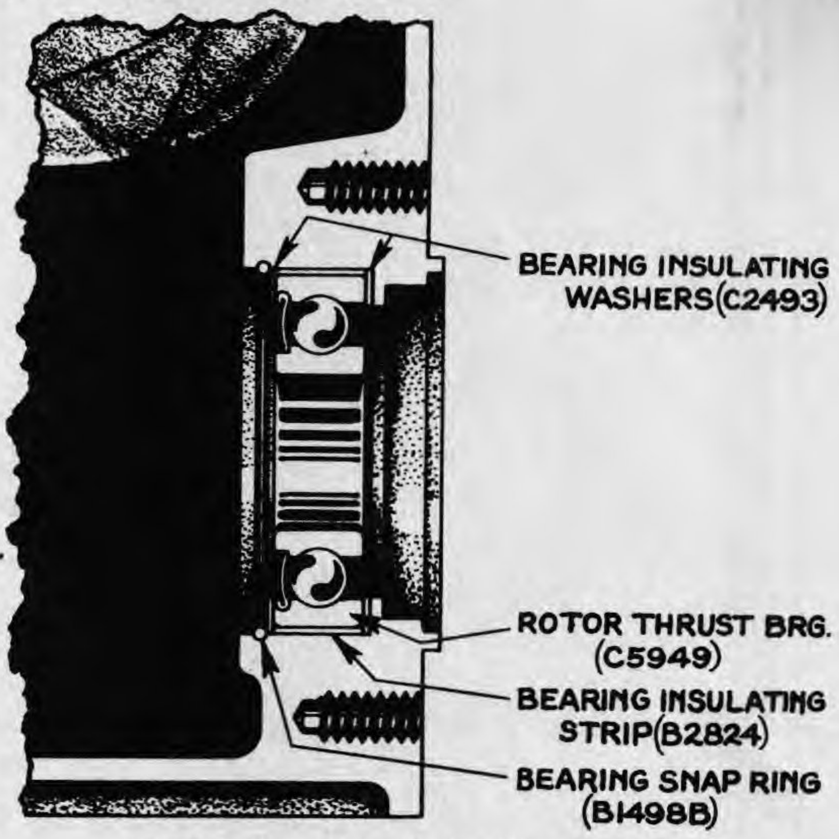

FIGURE 7 - THRUST BEARING MOUNTING

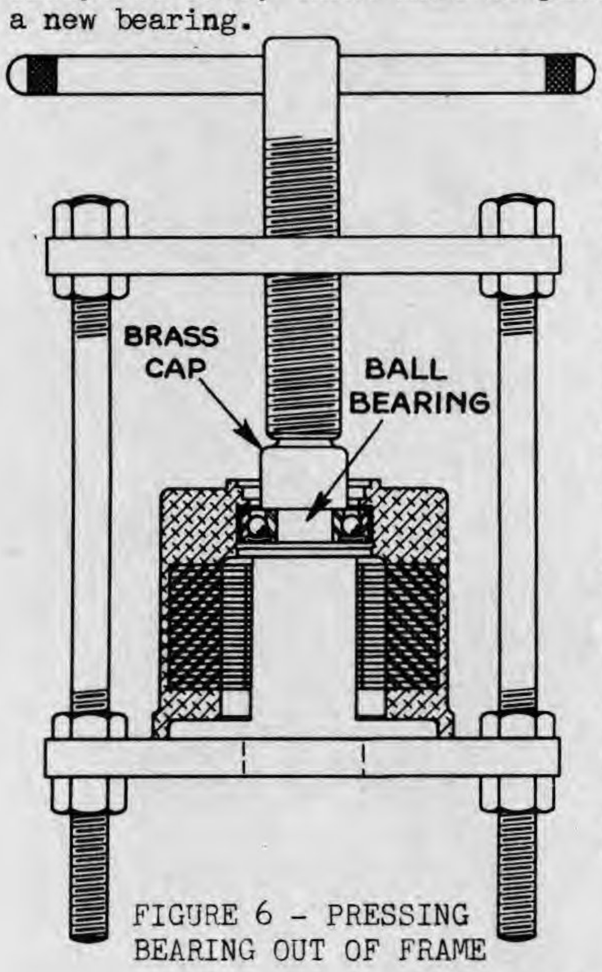

FIGURE 6 - PRESSING BEARING OUT OF FRAME

6. The new thrust ball bearing should be centered by hand in the housing, being certain that the insulating strip fits evenly around its outside circumference.

7. Place the magneto housing in the screw press as shown in Figure 8. Immediately above the bearing put the block C, carefully centering it with the bearing. Then turn down the drive screw of the press, placing the brass cap between the drive screw and the support block as shown. Be positive the assembly is perpendicular in the press before forcing the bearing into the recess.

8. The bearing insulating washer (C2493) may now be replaced and the snap ring (B1498B) sprung into place.

9. To prevent leakage of electrical current through the ball bearing and resultant damage due to possible fusing, the bearing is electrically insulated from the frame. The condition of the insulation may be determined by a simple circuit tester.

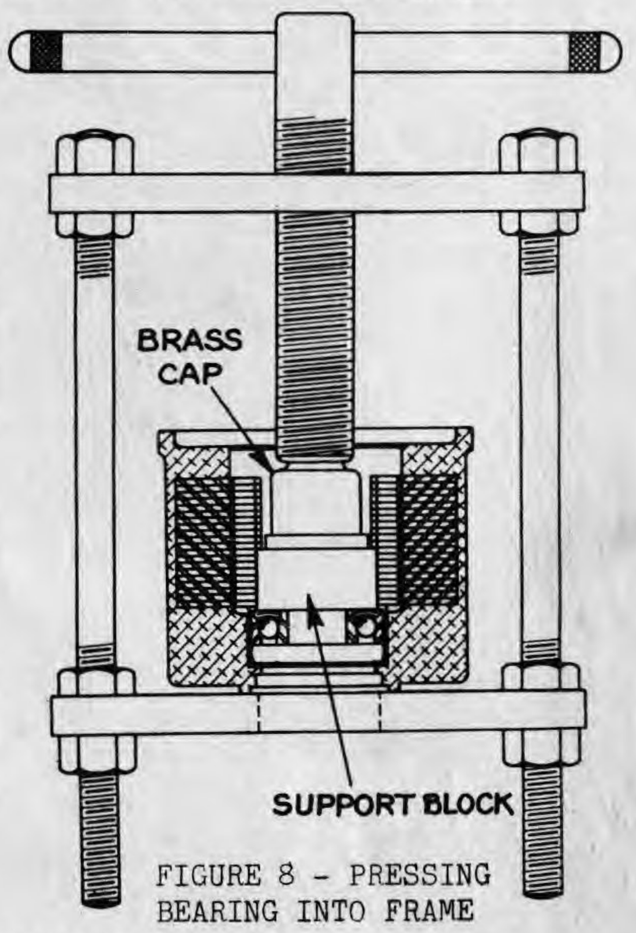

FIGURE 8 - PRESSING BEARING INTO FRAME

PART FIVE - SPECIAL TYPES FM-K/FM-J SERVICE KIT

1. In order to provide complete service on Type FM-J sleeve bearing magnetos, Service Stations should have at hand the special tools mentioned and illustrated in this bulletin. As such service facilities are equally important to the factory, every effort has been made to keep the requirements as reasonable as possible. This has been accomplished by adapting to the Type FM-J the same tools as are used on the Type FM-K magnetos. These tools are available to the Service Stations in a special combination identified as Magneto Tool Kit MT1A.

2. The MT1A Magneto Tool Kit consists of the following parts:

Part No.	Name of Part	No. Inc.	List Price
TD2252A	Distributor Bearing Tool (A)	1	*
TD2250A	Rotor Bearing Tool (B)	1	*
TD2272A	Bearing Plate Support Block (C) . . .	1	*
370TD	Hand Screw Press - Complete	1	*
1C2	FMC04 Sleeve Bearing Reservoir Grease	1/2 lb.	*
FM61	Service Bulletin FM61-FM-K Magnetos .	1	**
FM71A	Service Bulletin FM71A-FM-J Magnetos	1	**
FM109	Service Bulletin FM109-FM-JV Magnetos	1	**

* The current list price of each of these items is given in Repair Price List No. 9807B.
**Single bulletins are furnished without charge upon request.

The list price of the complete kit is $10.60, the usual Distributor and Service Station discounts being allowed.

3. The hand screw press (370TD) will prove very useful in Service Station repair work and should always be used in preference to hammering. The press is shipped entirely dismantled, but assembly should easily be made by reference to the photograph of Fig. 9.

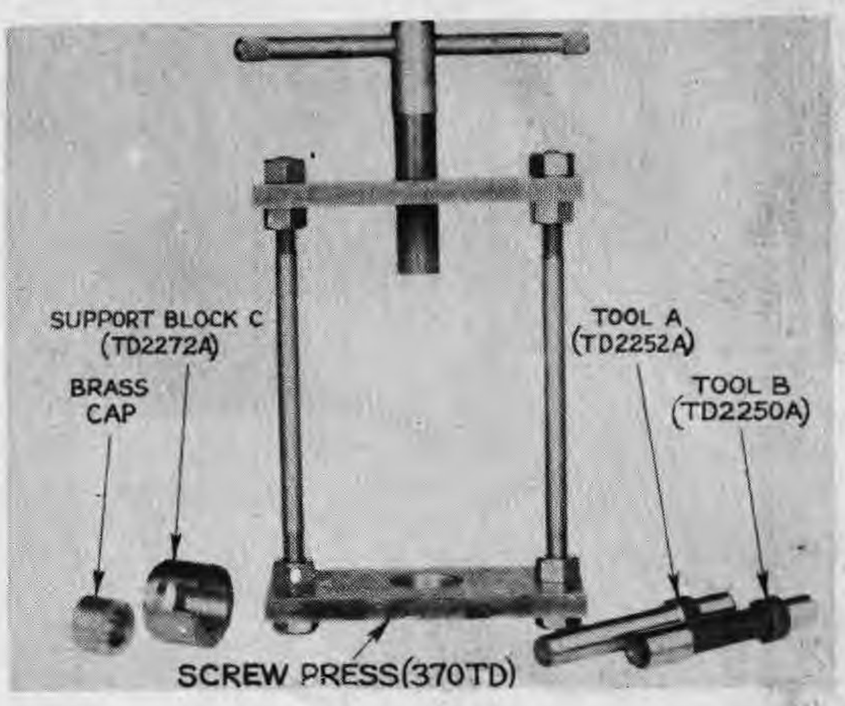

FIGURE 9 - SPECIAL TYPE MT1A MAGNETO TOOL KIT

Service Bulletin: Fairbanks-Morse Type FM-J Magnetos

PART SIX - ROTATION CHANGEOVER OF TYPE FM-J MAGNETOS

Type FM-J magnetos for either two or four cylinder engines may be easily converted from one rotation to the other. Parts necessary for the changeover are bearing plate (4631), stationary point bracket (2454), and, in the case of two cylinder magnetos, distributor disc (2765).

1. Remove the distributor end cap from the magneto and compare the end view with those of Figure 10, thereby definitely establishing the rotation of the magneto and the location of the various parts. On 2 cyl. units the distributor disc must be pulled off to obtain a similar end view.

2. Free the coil, condenser and ground lead wires as well as the breaker arm spring by removing the round head terminal screw in the contact support bracket. Remove the rotor pinion from the end of the shaft (4 cyl. units). Dismantle the bearing plate assembly, taking off the condenser, breaker arm, stationary contact bracket and eccentric head adjusting screw. The bearing plate can then be removed by taking out the four flat head mounting screws.

<u>CAUTION</u> - Do not attempt to remove the magnetic rotor from the frame, except as described in Part Three of this bulletin.

3. The first step in reassembly is to mount the new bearing plate in the magneto frame and then assembling the condenser, adjusting screw, stationary contact bracket and breaker arm. Note that for change of rotation the breaker arm is reversed by simply turning it over. The terminal screw should now be replaced, carefully connecting all lead wires.

4. The breaker points must be accurately adjusted to provide a gap of 0.020 inch at full separation, that is, when the breaker arm rides the high part of the cam. The rotor pinion (4 cyl.) or distributor disc (2 cyl.) should then be mounted on rotor shaft. The distributor end cap should be replaced, a new gasket being used between the frame and the end cap, and the joint positively sealed by applying FMCO2 Gasket Sealing Varnish. To mesh rotor pinion and distributor gear teeth refer to Part Seven of this bulletin.

5. Rotation changeover involves a corresponding change in the impulse coupling when used, in the coupling housing on base mounting units and the coupling stop on flange mounting magnetos. To a large extent such changes should be possible from the regular service stock.

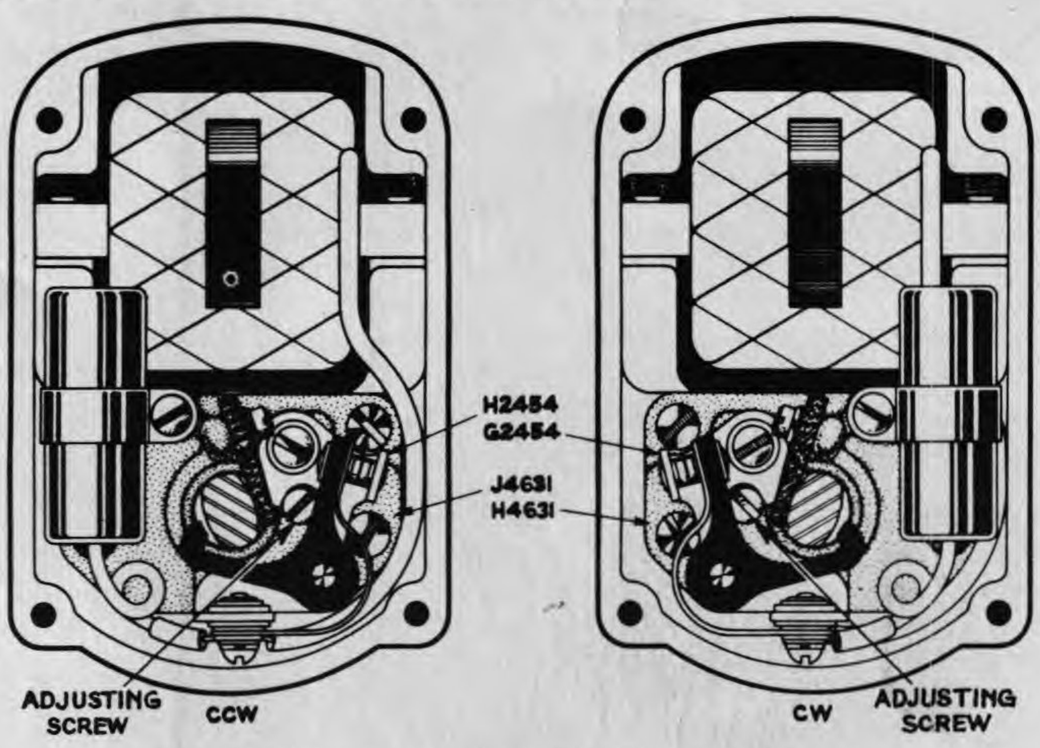

FIGURE 10 - VIEWS WITH END CAP REMOVED

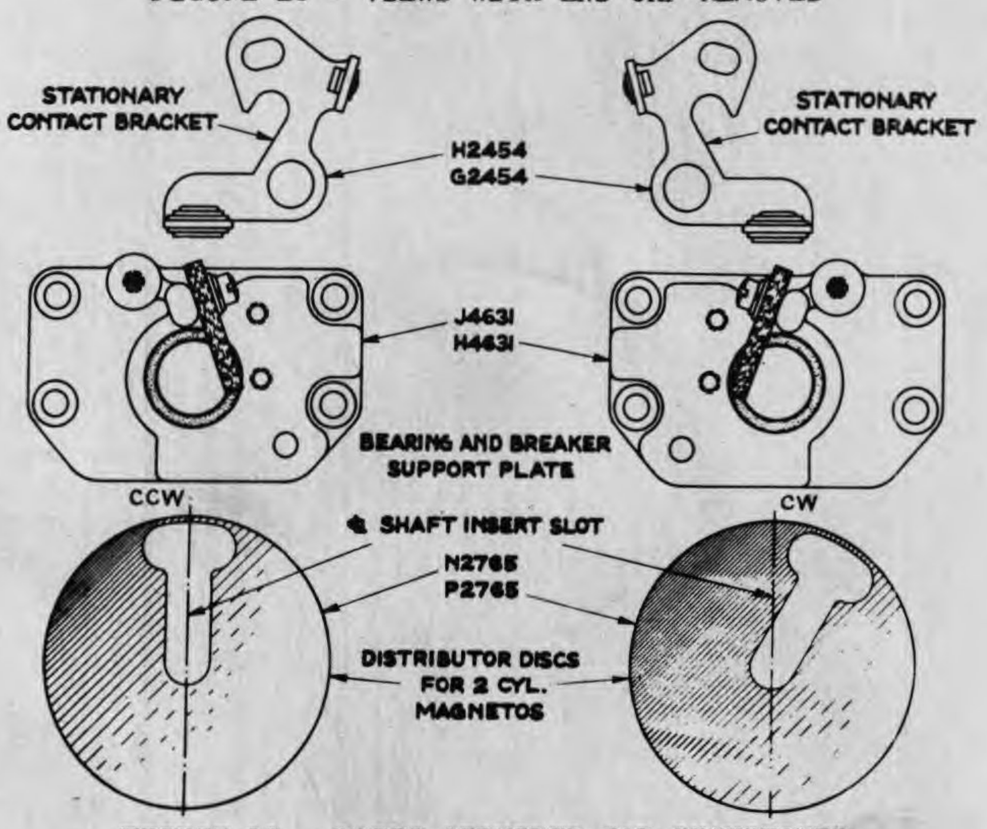

FIGURE 11 - PARTS REQUIRED FOR CHANGEOVER

PART SEVEN - MESHING ROTOR PINION AND DISTRIBUTOR GEAR TEETH

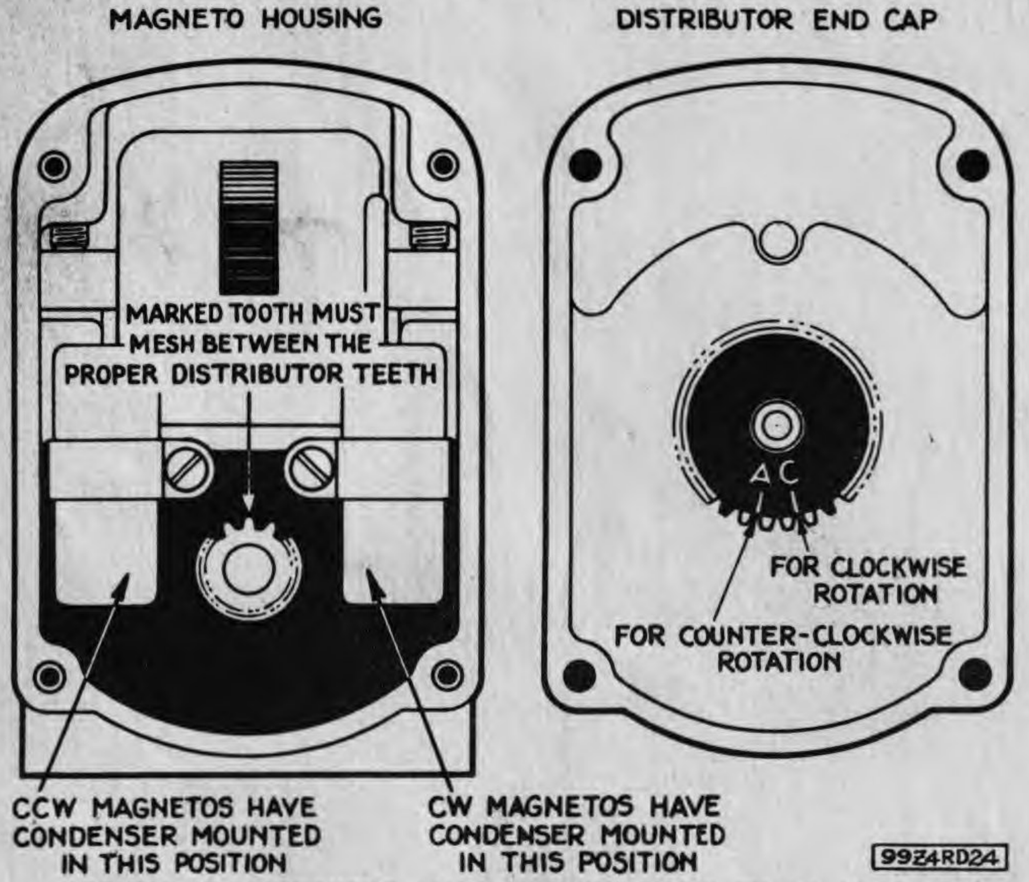

FIGURE 12 - MESHING GEAR TEETH - TYPE FM-J4 MAGNETOS

When the distributor end cap is removed from the Type FM-J4 magnetos, the rotor and distributor gear teeth become separated. When reassembly is made these gear teeth must be meshed carefully and correctly. The rotation of the magneto must first be ascertained; the location of the condenser can be used as an indication of the rotation.

1. <u>Clockwise (CW) rotation</u> - The single beveled tooth of the rotor pinion must mesh between the two marked teeth of the distributor gear designated by the letter C.

2. <u>Counterclockwise (CCW) rotation</u> - The single bevelled tooth of the rotor pinion must mesh between the two marked teeth of the distributor gear designated by the letter A.

3. The rotor of the magneto should be turned so that the marked tooth of the pinion points directly at the center of the coil as shown in Fig. 12. The distributor gear should be turned so that the marked teeth are along the lower edge.

4. Place the distributor end cap in its position on the magneto, being certain that the marked teeth mesh properly.

5. Service gears only are marked for both rotations, but the additional marking necessary may be transferred without difficulty through careful comparison.

FAIRBANKS, MORSE & CO.
Magneto Sales
Beloit Wisconsin

Bulletin FM103

FAIRBANKS-MORSE

IMPORTANT SERVICE INFORMATION

TYPE FM-JH2B & FM-JHE2B MAGNETOS

Adapted Only to Kiekhaefer Corp. Two Cylinder Engines

In former (6 section) manual, file under INSTRUCTIONS.

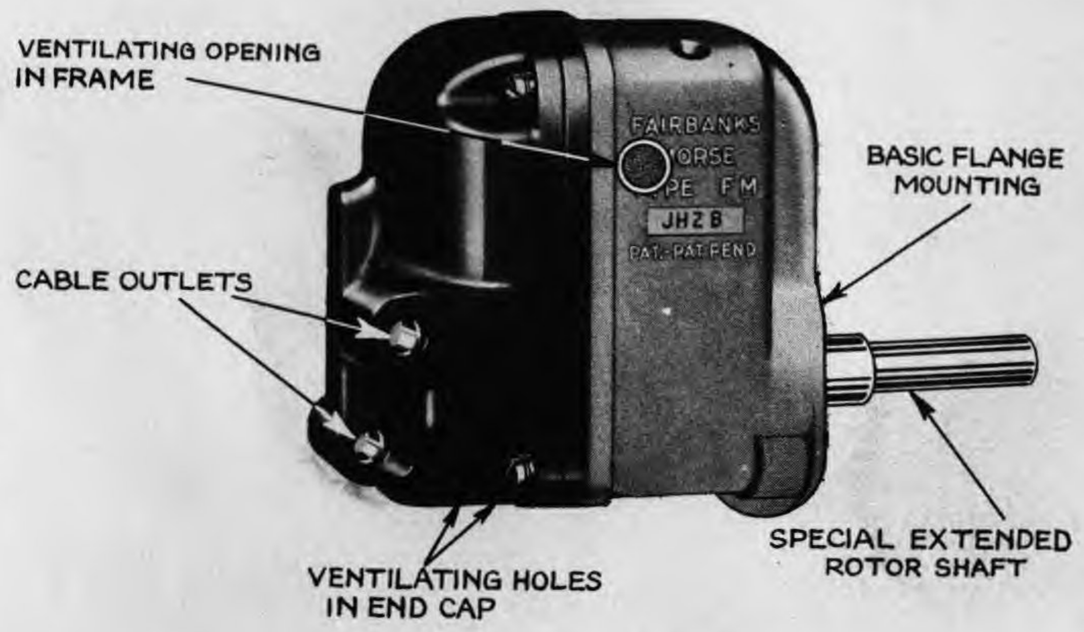

Type FM-JH2B70 Magneto

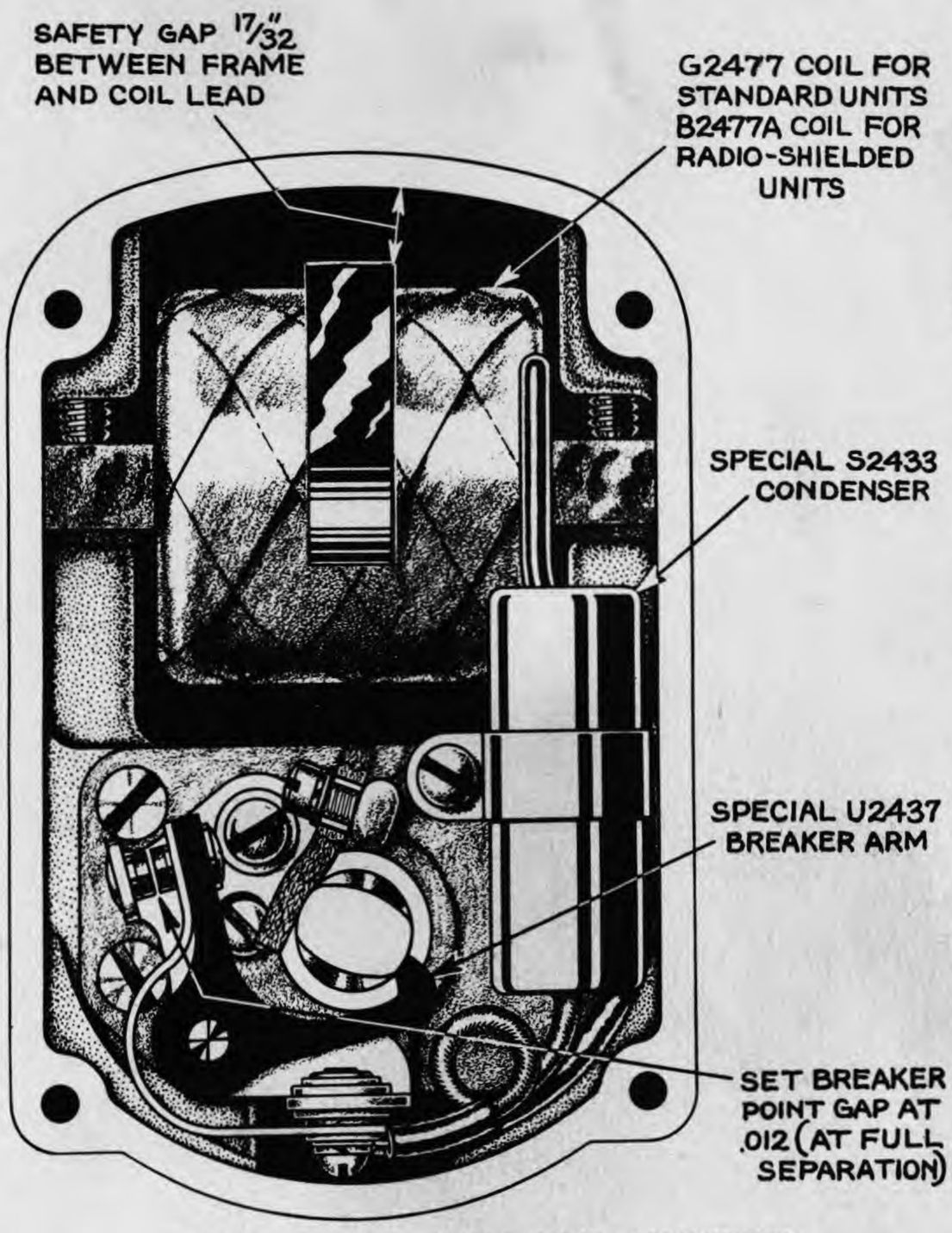

TYPES FM-JH2 & FM-JHE2 MAGNETOS CCW ROTATION

APPLICATION

Type FM-JH2 magnetos are built for use only on two cylinder engines made by the Kiekhaefer Corp. of Cedarburg, Wisconsin. Since these units have a number of important differences with respect to the standard Type FM-J magnetos, Service Stations should give close attention to the following explanation.

GENERAL DESCRIPTION

Type FM-JH2 magnetos are of the 180° spark interval design, the distributor rotor being mounted directly on the magnetic rotor shaft. Jump-spark distribution is used, with both frame and end cap having ventilating openings. The basic flange mounting fits the magnetos to an adapter plate on the Kiekhaefer engines. No impulse coupling is furnished, but the magnetic rotor has a special extended shaft. Rotation of the unit is CCW.

TYPE VARIATIONS

Three important variations of the Type FM-JH2 magnetos are being furnished the Kiekhaefer Corp.

(a) Type FM-JH2B70 magnetos are for standard service, using the KX2430 distributor end cap which has side outlets (as illustrated at the left).

(b) Type FM-JH2B70A magnetos are for standard service, using the LX2430 distributor end cap which has vertical outlets.

(c) Type FM-JHE2B70 magnetos are entirely enclosed within metal housings for application to engines requiring completely radio-shielded ignition systems.

HIGH SPEED OPERATION

The Type FM-JH2 magnetos are built to operate at speeds up to 5000 rpm. To provide for this considerable increase in rotative speed over standard models, changes have been made in the construction of the magneto which should be carefully noted by servicemen.

(a) The safety gap between the end of the coil high tension lead and the frame has been increased to 17/32". To secure this safety gap a small portion of the high tension lead of standard G2477 replacement coils must be cut off during installation.

(b) The breaker contact point opening at full separation is .012 inch and must be accurately adjusted for satisfactory performance.

(c) Examine carefully the drawing (at the left) of the end view of the Type FM-JH2 magneto. Please note that the rotation of the cam in relation to the breaker mechanism is the reverse of standard Type FM-J magnetos and that the breaker plate assembly must be made in accordance. In effect, this means that certain standard CW Type FM-J replacement parts are furnished for the CCW Type FM-JH2 magnetos. A special breaker contact arm (U2437) must be used for the Type FM-JH2 magnetos.

FACTORY PUBLICATIONS

Instruction No. 2871 has been issued to provide information covering field service and adjustment of the Type FM-JH2 magnetos. Repair Price List No. 9871 has been compiled to give the necessary repair charts and repair parts lists to describe replacement parts.

Fairbanks, Morse & Co.
Magneto Sales
Beloit Wisconsin

Bulletin FM103
August 1, 1942
Printed in U.S.A.

File Section- *TYPE FM-J*