Colt Industries

Fairbanks Morse
Engine Accessories Division
BELOIT, WISCONSIN

PARTS LIST
TYPE FMLTP1 MAGNETOS
FMLTP1B2C, 2D, 26, 103
10 009 191, 10 009 190, 10 009 197, 10 005 159

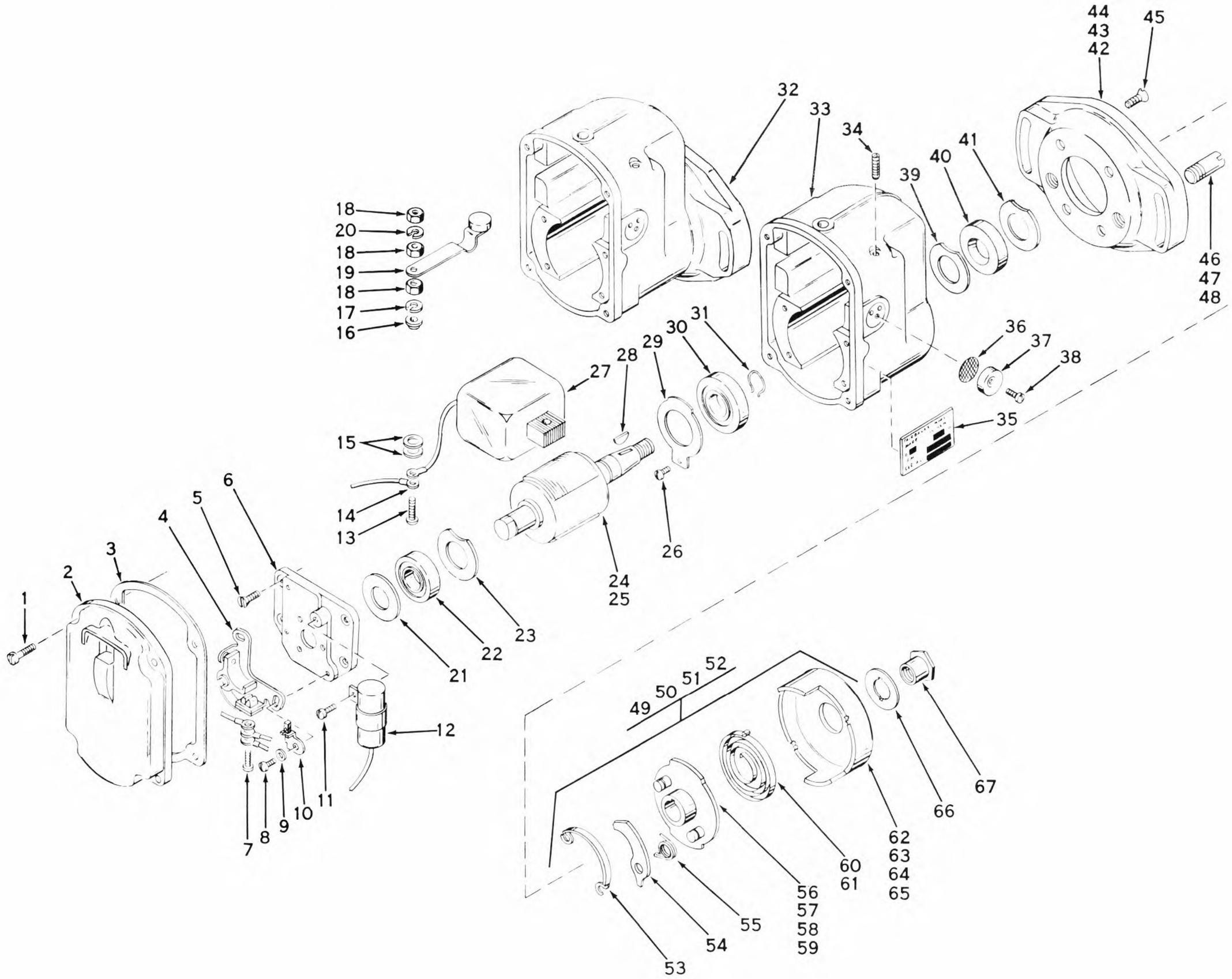

DATA		FM LTP1B 2C	FM LTP1B 2D	FM LTP1B 26	FM LTP1B 103	MAGNETO PART NUMBERS
	Rotation	CW	CCW	CCW	CCW	
	Impulse Coupling	UB	UBL	UBL	UBL	
	Lag Angle	17°	15°	25°	30°	
Engine Manufacturer and Specification Number	Fairbanks Morse Inc.	X	-	-	-	FMLTP1B2C 10 009 191
	Fairbanks Morse Inc.	-	X	-	-	FMLTP1B2D 10 009 190
	Climax Engine Co.	-	-	X	-	FMLTP1B26 10 009 197
	Witte Engine Co.	-	-	-	X	FMLTP1B103 10 005 159

Ref. No.	Part Number	Part Number	Number Used				Description
1	10 000 895	10S14D	4	4	4	4	Screw, 10-24 x 3/4
2	10 013 124	MZ2430	1	1	1	1	End cap
3	10 082 498	H2498	1	1	1	1	Gasket
4	10 013 235	Q2437A	1	1	1	1	Point set
5	10 000 668	8S6G	4	4	4	4	Screw, 8-32 x 3/8
6	10 011 157	BY4631	1	1	1	1	Bearing support
7	10 011 694	6S6Z	1	1	1	1	Terminal screw, 6-32 x 3/8

PRINTED IN U.S.A.

Ref. No.	Part Number	Part Number	Number Used				Description
8	10 010 306	8S5U	2	2	2	2	Support screw and lockwasher, 8-32 x 5/16
9	10 025 969	B5969	2	2	2	2	Support plate washer
10	10 072 788	G2788	1	1	1	1	Cam wick and holder
11	10 001 617	8S4U	1	1	1	1	Screw, 8-32 x 1/4
12	10 011 717	RX2433	1	1	1	1	Condenser
13	10 010 784	8S14N	1	1	1	1	Screw, 8-32 x 7/8
14	10 004 233	B2499A	1	1	1	1	Breaker arm terminal to primary term. wire
15	10 036 018	C6018	2	2	2	2	Ground switch insulating washer
16	10 011 901	N2457A	1	1	1	1	Ground switch bushing
17	10 000 443	8LW6	1	1	1	1	Lockwasher
18	10 000 248	8N1	3	3	3	3	Nut
19	10 010 619	M2514	1	1	1	1	Ground switch insulating lever
20	10 000 760	8LW5	1	1	1	1	Lockwasher
21	10 010 845	E2493	1	1	1	1	Inner grease retaining washer - brg. support
22	10 145 949	D5949A	1	1	1	1	Rotor cam end bearing
23	10 112 492	A2492C	1	1	1	1	Outer grease retaining washer - brg. support
24	10 011 252	TR2480	-	1	1	1	Rotor
25	10 004 071	SR2480	1	-	-	-	Rotor
26	10 001 930	8S6U	1	1	1	1	Screw, 8-32 x 3/8
27	10 010 968	LV2477C	1	1	1	1	Coil
28	10 000 279	3K1	1	1	1	1	Key
29	10 003 944	A2492D	1	1	1	1	Bearing retaining washer - rotor drive end
30	10 105 949	C5949	1	1	1	1	Rotor drive end bearing
31	10 131 498	B1498D	1	1	1	1	Rotor shaft drive end snap ring
32	10 004 179	GV2425	-	-	1	-	Housing
33	10 004 264	XV2425	1	1	-	1	Housing
34	10 010 938	31SS14A	2	2	2	2	Setscrew, 5/16-24 x 7/8
35	10 010 195	A195	1	1	1	1	Name plate
36	10 003 564	C6032B	2	2	2	2	Vent screen
37	10 004 099	B6030A	2	2	2	2	Vent cover
38	10 001 818	6S4U	2	2	2	2	Screw, 6-32 x 1/4
39	10 112 492	A2492C	1	1	1	1	Inner seal - rotor drive end
40	10 073 861	G3861	1	1	1	1	Rotor drive end seal
41	10 012 492	A2492A	1	1	1	1	Outer seal - rotor drive end
42	10 252 561	AX2561	1	-	-	-	Special mounting flange
43	10 262 561	BX2561	-	1	-	-	Special mounting flange
44	10 011 720	DX2561	-	-	-	1	Special mounting flange
45	10 000 726	25S6G	4	4	-	4	Screw, 1/4-20 x 3/8
46	10 082 568	H2568	-	1	-	1	Impulse coupling pawl stop pin
47	10 092 568	J2568	1	-	-	-	Impulse coupling pawl stop pin
48	10 192 568	U2568	-	-	1	-	Impulse coupling pawl stop pin
49	10 013 222	UT2563C-17	1	-	-	-	Coupling assembly
50	10 252 562	AX2563C-15	-	1	-	-	Coupling assembly
51	10 232 558	JS2563C-25	-	-	1	-	Coupling assembly
52	10 452 560	CS2563C-30	-	-	-	1	Coupling assembly
53	10 013 586	A1498J	1	1	1	1	Pawl lock spring
54	10 001 360	Q2566	1	1	1	1	Coupling pawl
55	10 013 242	S5963	-	-	1	-	Pawl spring
56	10 262 563	BX2563	1	-	-	-	Coupling hub assembly
57	10 252 563	AX2563	-	1	-	-	Coupling hub assembly
58	10 092 563	GW2563	-	-	1	-	Coupling hub assembly
59	15 582 563	CW2563	-	-	-	1	Coupling hub assembly
60	10 042 565	D2565	1	1	-	-	Impulse coupling drive spring
61	10 052 565	E2565	-	-	1	1	Impulse coupling drive spring
62	10 135 957	N5957	1	-	-	-	Impulse coupling shell
63	10 125 957	M5957	-	1	-	-	Impulse coupling shell
64	10 405 957	RX5957	-	-	1	-	Impulse coupling shell
65	10 135 958	UZ5957	-	-	-	1	Impulse coupling shell
66	10 011 781	B5931B	1	1	1	1	Impulse coupling nut lockwasher
67	10 011 740	U2570	1	1	1	1	Impulse coupling nut