Colt Industries

Fairbanks Morse
Engine Accessories Operation
BELOIT, WISCONSIN

PARTS LIST
TYPE FMLTR4 MAGNETOS
FMLTR42B103, 1B28, 2B26
10 006 181, 10 009 280, 10 004 878

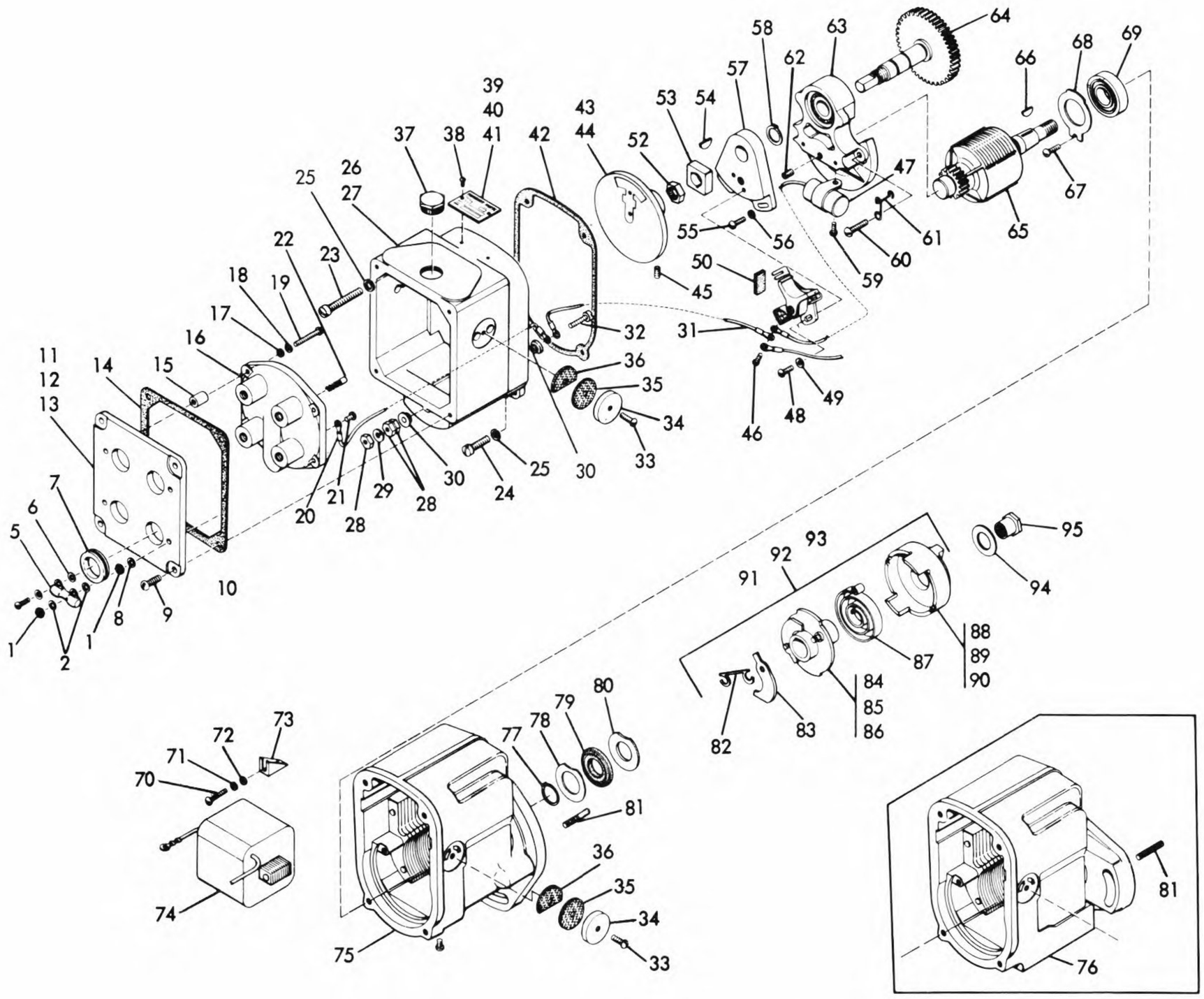

DATA		FM LTR4 2B103	FM LTR4 1B28	FM LTR4 2B26	MAGNETO PART NUMBERS
Rotation		CCW	CW	CW	
Impulse Coupling		UBL	UB	UB	
Lag Angle		30°	40°	25°	
Engine Manufacturer and Specification Number	Witte Engine Co. - 47-316-928	X	-	-	FMLTR4-2B103 10 006 181
	Ajax Iron Works - BM10987-B	-	X	-	FMLTR4-1B28 10 009 280
	Climax Engine Mfg. Co.	-	-	X	FMLTR4-2B26 10 004 878

Ref. No.	Part Number	Part Number	Number Used			Description
1	10 000 248	8N1	4	6	4	Resistor nut
2	10 025 969	B5969	4	6	4	Plate washer, #8
3	10 003 566	10FS4D	4	6	4	Terminal screw, #10-24 x 1/4
4	10 022 276	B2276B	2	3	2	Resistor washer
5	15 500 783	H1158	2	3	2	Resistor, 50 ohm
6	10 000 442	10LW4	2	3	2	Resistor lockwasher
7	10 011 132	N2473	4	4	4	Grommet
8	10 000 443	8LW6	2	4	2	Resistor lockwasher
9	10 000 890	8S8D	4	4	4	Cover screw, #8-32 x 1/2
10	10 011 962	8S20N	2	3	2	Resistor screw
11	10 013 267	J800A	1	1	1	End cap cover
12	10 013 488	A800N	1	-	1	End cap cover complete
13	10 011 898	A800G	-	1	-	End cap cover complete

Magneto Parts List

Ref. No.	Part Number	Part Number	2B103	1B28	2B26	Description
			Number Used			
14	10 011 714	G682A	1	1	1	Gasket
15	10 010 134	B2982	4	4	4	Spacer
16	10 013 269	N2474E	1	1	1	Distributor block
17	10 025 969	B5969	4	4	4	Distributor block washer #8
18	10 000 443	8LW6	4	4	4	Distributor block lockwasher
19	10 010 145	8S16N	2	3	2	Distributor block screw #8-32 x 1
20	10 011 540	M2499	1	1	1	Terminal wire assembly
21	10 001 617	8S4U	1	1	1	Distributor block terminal screw #8-32 x 1/4
22	10 010 994	F2460A	5	5	5	Brush and spring
23	10 013 890	25S24A	2	2	2	End cap screw 1/4-20 x 1-1/2
24	10 013 889	25S12A	2	2	2	End cap screw 1/4-20 x 3/4
25	10 013 891	25SLW2	4	4	4	End cap lockwasher 1/4
26	10 010 140	GY2430A	1	1	1	End cap
27	10 011 137	Z2430C	1	1	1	End cap complete
28	10 001 141	10N2	3	3	3	Terminal nut
29	10 000 240	10LW2	1	1	1	Terminal lockwasher
30	10 011 291	M2457A	2	2	2	Terminal bushing
31	10 011 540	M2499	1	1	1	Terminal wire assembly
32	10 001 730	10S18D	1	1	1	Terminal screw, #10-24 x 1
33	10 000 662	6S6N	4	4	4	Vent cover screw
34	10 011 232	A1232	4	4	4	Vent cover
35	10 000 527	A1233	4	4	4	Vent copper mesh
36	10 036 032	A6032A	4	4	4	Vent screen
37	10 010 690	E5967	1	1	1	Timing window cap screw
38	10 000 145	2S2V	2	2	2	Name plate screw, #2 x 1/8
39	10 011 988	E195	-	1	-	Name plate
40	10 013 284	H195	-	-	1	Name plate
41	10 013 471	G195	1	-	-	Name plate
42	10 062 498	F2498	1	1	1	Gasket
43	10 013 050	YX2765	-	1	1	Distributor rotor
44	10 013 494	ZX2765	1	-	-	Distributor rotor
45	14 054 002	54-2	1	1	1	Rotor setscrew #10-32 x 5/16
46	10 011 694	6S6Z	1	1	1	Breaker arm terminal screw, #6-32 x 3/8
47	10 011 717	RX2433	1	1	1	Condenser
48	10 001 930	8S6U	2	2	2	Contact support screw, #8-32 x 3/8
49	10 025 969	B5969	2	2	2	Support plate washer, #8
50	10 042 788	D2788	1	1	1	Cam wick
51	10 011 673	S2437A	1	1	1	Point set
52	10 010 277	43N2	1	1	1	Cam nut
53	10 010 188	K2432	1	1	1	Cam
54	10 000 378	00K1	1	1	1	Key
55	10 000 890	8S8D	2	2	2	Support screw, #8-32 x 1/2
56	10 025 969	B5969	2	2	2	Support washer #8
57	10 003 361	Y2424	1	1	1	Support plate
58	10 010 267	W1498	1	1	1	Distributor bearing snap ring
59	10 013 062	8S5NA	1	1	1	Condenser mounting screw, #8-32 x 5/16
60	10 000 894	10S12D	3	3	3	Bearing support screw, #10-24 x 3/4
61	10 011 382	H2471	1	1	1	Lead wire bracket
62	10 011 417	25SS4B	1	1	1	Bearing support setscrew 1/4-20 x 1/4
63	10 011 337	JY4631	1	1	1	Bearing support, w/bearings
64	10 011 178	PX5939	1	1	1	Distributor shaft and gear
65	10 011 176	XR2480	1	1	1	Magnetic rotor
66	10 000 379	3K1	1	1	1	Key
67	10 001 930	8S6U	1	1	1	Retainer screw, #8-32 x 3/8
68	10 003 944	A2492D	1	1	1	Bearing retainer
69	10 105 949	C5949	1	1	1	Drive end bearing
70	10 010 145	8S16N	2	2	2	Wedge screw, #8-32 x 1
71	10 000 443	8LW6	2	2	2	Wedge lockwasher, #8
72	10 025 969	B5969	2	2	2	Wedge plate washer, #8
73	10 010 017	F3236	2	2	2	Coil wedge
74	10 003 770	TV2477C	1	1	1	Coil
75	10 010 056	CU2425	-	1	1	Housing
76	10 013 486	KT2425	1	-	-	Housing
77	10 010 045	D1498B	1	1	1	Rotor shaft snap ring
78	10 112 492	A2492C	1	1	1	Seal inner washer
79	10 073 861	G3861	1	1	1	Drive end seal
80	10 012 492	A2492A	1	1	1	Seal outer washer
81	10 062 568	F2568	1	1	1	Pawl stop pin
82	10 013 586	A1498J	1	1	1	Pawl lock spring
83	10 001 360	Q2566	2	2	2	Coupling pawl
84	10 152 563	Q2563	-	-	1	Hub assembly
85	10 162 563	R2563	1	-	-	Hub assembly
86	10 262 563	BX2563	-	1	-	Hub assembly
87	10 052 565	E2565	1	1	1	Coupling drive spring
88	10 195 958	ZZ5957	1	-	-	Coupling shell
89	10 275 957	CX5957	-	1	-	Coupling shell
90	15 625 957	QY5957	-	-	1	Coupling shell
91	10 272 558	SS2563C	1	-	-	Coupling complete
92	10 432 560	WU2563C	-	1	-	Coupling complete
93	10 412 558	LS2563C	-	-	1	Coupling complete
94	10 011 781	B5931B	1	1	1	Coupling nut washer
95	10 011 740	U2570	1	1	1	Coupling nut