Colt Industries — Fairbanks Morse Engine Accessories Operation
BELOIT, WISCONSIN

PARTS LIST
TYPE FMLTR6B MAGNETOS
FMLTR6B3, 4B, 8A, 8A-1, 8B-1
10 009 793, 10 009 721, 10 009 723
10 009 779, 10 009 815

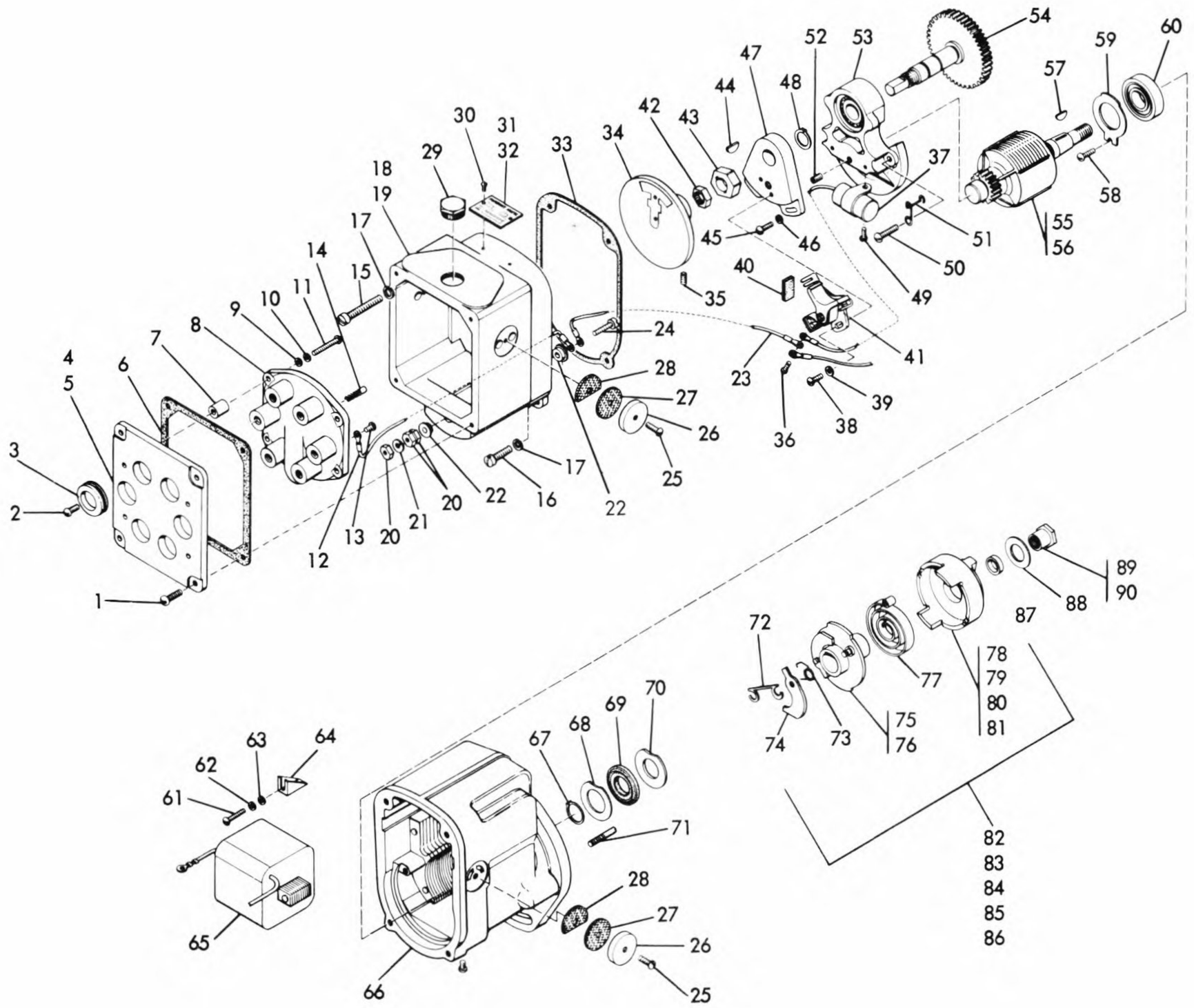

DATA		FM LTR6 B3	FM LTR6 B4B	FM LTR6 B8A	FM LTR6 B8A-1	FM LTR6 B8B-1	MAGNETO PART NUMBERS
Rotation		CW	CW	CW	CW	CW	
Impulse Coupling		UB	UB	UB	UB	UB	
Lag Angle		45°	45°	40°	45°	40°	
Engine Manufacturer and Specification Number	Allis-Chalmers Mfg. Co.	X	-	-	-	-	FMLTR6B3 10 009 793
	Minneapolis-Moline	-	X	-	-	-	FMLTR6B4B 10 009 721
	Waukesha Motor Co.	-	-	X	-	-	FMLTR6B8A 10 009 723
	Waukesha Motor Co. - 69422	-	-	-	X	-	FMLTR6B8A-1 10 009 779
	Waukesha Motor Co.	-	-	-	-	X	FMLTR6B8B-1 10 009 815

Ref. No.	Part Number	Part Number	Number Used					Description
1	10 000 890	8S8D	4	4	4	4	4	Cover screw #8-32 x 1/2
2	10 003 566	10FS4D	6	6	6	6	6	Terminal screw #10-24 x 1/4
3	10 011 132	N2473	6	6	6	6	6	Grommet
4	10 013 330	H800A	1	1	1	1	1	Cover plate
5	10 011 135	A800C	1	1	1	1	1	Cover complete
6	10 011 714	G682A	1	1	1	1	1	Gasket
7	10 011 134	B2982	4	4	4	4	4	Spacer
8	10 011 682	M2474E	1	1	1	1	1	Distributor block
9	10 025 969	B5969	4	4	4	4	4	Distributor block washer #8
10	10 000 443	8LW6	4	4	4	4	4	Distributor block lockwasher
11	10 010 145	8S16N	4	4	4	4	4	Distributor block screw #8-32 x 1
12	10 011 540	M2499	1	1	1	1	1	Terminal wire assembly
13	10 001 617	8S4U	1	1	1	1	1	Distributor terminal screw #8-32 x 1/4

Magneto Parts List

Ref. No.	Part Number	Part Number	B3	B4B	B8A	B8A-1	B8B-1	Description
			Number Used					
14	10 010 994	F2460A	7	7	7	7	7	Brush and spring
15	10 013 890	25S24A	2	2	2	2	2	End cap screw 1/4-20 x 1-1/2
16	10 013 889	25S12A	2	2	2	2	2	End cap screw 1/4-20 x 3/4
17	10 013 891	25LW2	4	4	4	4	4	End cap lockwasher
18	10 011 140	GY2430A	1	1	1	1	1	End cap
19	10 011 137	Z2430C	1	1	1	1	1	End cap complete
20	10 001 141	10N2	3	3	3	3	3	Terminal screw nut
21	10 000 240	10LW2	1	1	1	1	1	Terminal screw lockwasher
22	10 011 291	M2457A	2	2	2	2	2	Terminal screw bushing
23	10 011 540	M2499	1	1	1	1	1	Terminal wire assembly
24	10 001 730	10S18D	1	1	1	1	1	Terminal screw #10-24 x 1-1/8
25	10 000 662	6S6N	4	4	4	4	4	Vent cover screw #6-32 x 3/8
26	10 011 232	A1232	4	4	4	4	4	Vent cover
27	10 000 527	A1233	4	4	4	4	4	Vent copper mesh
28	10 036 032	A6032A	4	4	4	4	4	Vent screen
29	10 010 690	E5967	1	1	1	1	1	Timing window capscrew
30	10 000 145	2S2V	2	2	2	2	2	Name plate screw #2 x 1/8
31	10 010 195	A195	1	1	1	-	-	Name plate
32	10 011 785	F195	-	-	-	1	1	Name plate
33	10 062 498	F2498	1	1	1	1	1	End cap gasket
34	10 011 142	TX2765	1	1	1	1	1	Distributor rotor
35	14 054 002	54-2	1	1	1	1	1	Rotor setscrew #10-32 x 5/16
36	10 011 694	6S6Z	1	1	1	1	1	Breaker arm terminal screw #6-32 x 3/8
37	10 011 717	RX2433	1	1	1	1	1	Condenser
38	10 001 930	8S6U	2	2	2	2	2	Contact support screw #8-32 x 3/8
39	10 025 969	B5969	2	2	2	2	2	Contact support washer #8
40	10 042 788	D2788	1	1	1	1	1	Cam wick
41	10 011 673	S2437A	1	1	1	1	1	Point set
42	10 010 277	43N2	1	1	1	1	1	Cam nut
43	10 010 148	J2432	1	1	1	1	1	Cam
44	10 000 378	00K1	1	1	1	1	1	Key
45	10 000 890	8S8D	2	2	2	2	2	Support plate screw #8-32 x 1/2
46	10 025 969	B5969	2	2	2	2	2	Support plate washer #8
47	10 003 361	Y2424	1	1	1	1	1	Support plate
48	10 010 267	W1498	1	1	1	1	1	Distributor shaft snap ring
49	10 013 062	8S5NA	1	1	1	1	1	Condenser mounting screw #8-32 x 5/16
50	10 000 894	10S12D	3	3	3	3	3	Bearing support screw #10-32 x 3/4
51	10 011 382	H2471	1	1	1	1	1	Lead wire bracket
52	10 011 417	25SS4B	1	1	1	1	1	Bearing support setscrew 1/4-20 x 1/4
53	10 011 337	JY4631	1	1	1	1	1	Bearing support
54	10 010 162	NX5939	1	1	1	1	1	Distributor shaft and gear assembly
55	10 011 044	PR2480	1	1	-	-	-	Magnetic rotor
56	10 011 213	RR2480	-	-	1	1	1	Magnetic rotor
57	10 000 379	3K1	1	1	1	1	1	Key
58	10 001 930	8S6U	1	1	1	1	1	Retainer screw #8-32 x 3/8
59	10 003 944	A2492D	1	1	1	1	1	Bearing retainer
60	10 105 949	C5949	1	1	1	1	1	Drive end bearing
61	10 010 145	8S16N	2	2	2	2	2	Wedge screw #8-32 x 1
62	10 000 443	8LW6	2	2	2	2	2	Wedge lockwasher
63	10 025 969	B5969	2	2	2	2	2	Wedge plate washer #8
64	10 010 017	F3236	2	2	2	2	2	Coil wedge
65	10 003 770	TV2477C	1	1	1	1	1	Coil
66	10 010 056	CU2425	1	1	1	1	1	Housing
67	10 011 045	D1498B	1	1	1	1	1	Rotor shaft snap ring
68	10 112 492	A2492C	1	1	1	1	1	Seal inner washer
69	10 073 861	G3861	1	1	1	1	1	Drive end seal
70	10 012 492	A2492A	1	1	1	1	1	Seal outer washer
71	10 172 568	S2568	1	1	1	1	1	Pawl stop pin
72	10 013 586	A1498J	1	1	1	1	1	Pawl lock spring
73	10 013 543	T5963	2	-	2	2	2	Coupling pawl spring
74	10 001 360	Q2566	2	2	2	2	2	Coupling pawl
75	10 172 563	S2563	1	-	1	1	1	Hub assembly
76	10 152 560	KZ2563	-	1	-	-	-	Hub assembly
77	10 052 565	E2565	1	1	1	1	1	Coupling drive spring
78	10 135 957	N5957	1	1	-	-	-	Coupling shell
79	10 235 957	Y5957	-	-	1	-	-	Coupling shell
80	10 355 957	LX5957	-	-	-	1	-	Coupling shell
81	10 465 957	YX5957	-	-	-	-	1	Coupling shell
82	10 332 559	BT2563C	-	1	-	-	-	Coupling complete
83	10 352 560	LU2563C	-	-	-	1	-	Coupling complete
84	10 402 560	RU2563C	1	-	-	-	-	Coupling complete
85	10 452 562	WX2563C	-	-	1	-	-	Coupling complete
86	15 692 562	XY2563C	-	-	-	-	1	Coupling complete
87	10 022 572	B2572	-	-	1	1	1	Gear Bushing
88	10 011 781	B5931B	1	1	-	-	-	Coupling nut washer
89	10 142 570	P2570	-	-	1	1	1	Coupling nut
90	10 011 740	N2570	1	1	-	-	-	Coupling nut