Colt Industries

Fairbanks Morse
Engine Accessories Operation
BELOIT, WISCONSIN

PARTS LIST
TYPE FMLTR6B MAGNETOS
FMLTR6B8G, 8H, 16H, 16J, 26, 26A
10 009 722, 10 009 817, 10 009 725
10 009 729, 10 009 716, 10 009 758

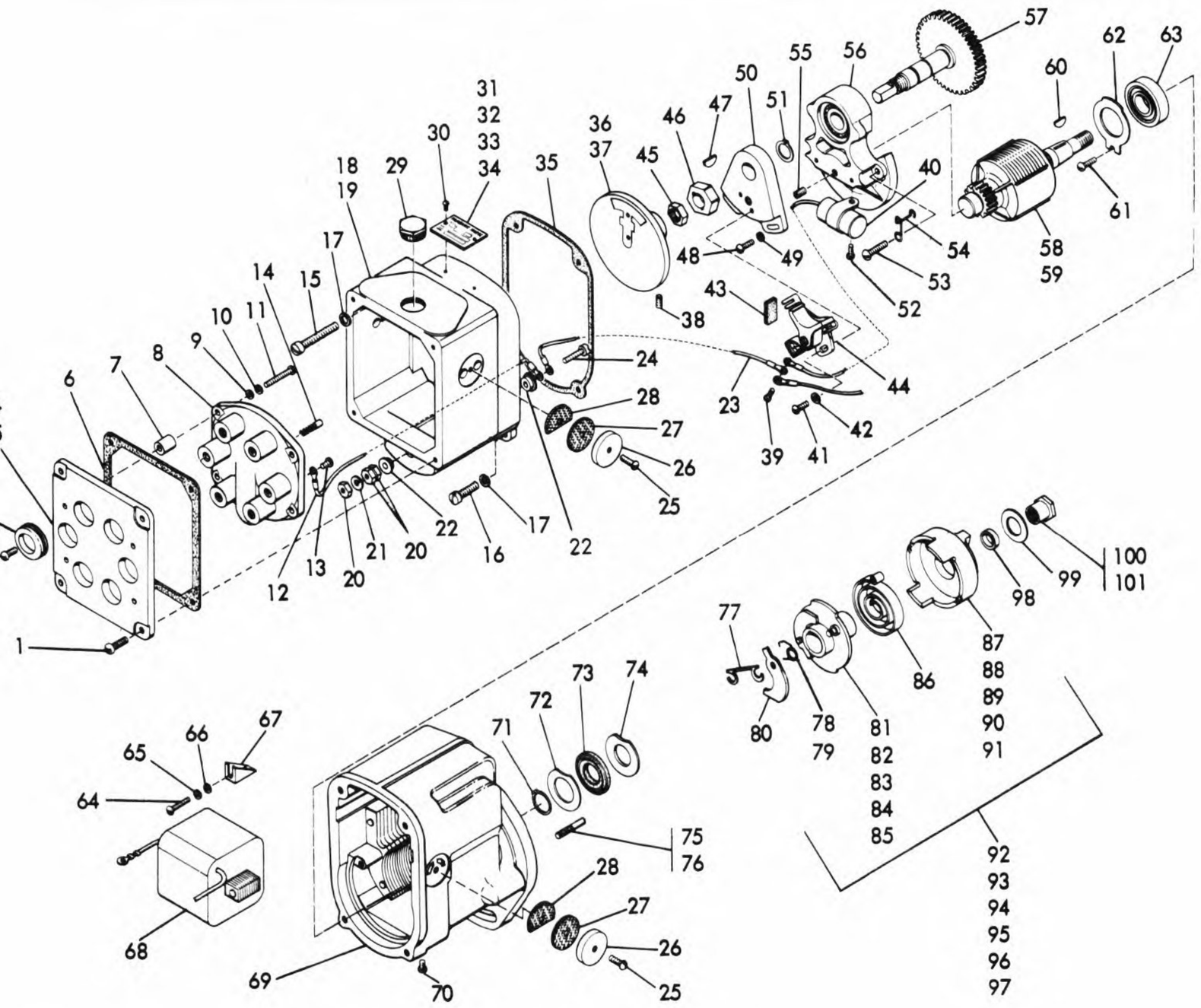

DATA		FM LTR6 B8G	FM LTR6 B8H	FM LTR6 B16H	FM LTR6 B16J	FM LTR6 B26	FM LTR6 B26A	MAGNETO PART NUMBERS
Rotation		CCW	CW	CW	CW	CW	CCW	
Impulse Coupling		UBL	UB	UB	UB	UB	UBL	
Lag Angle		40°	40°	50°	30°	50°	50°	
Engine Manufacturer and Specification Number	Waukehsa Motors - 60961	X	-	-	-	-	-	FMLTR6B8G 10 009 722
	Waukesha Motors - 69456	-	X	-	-	-	-	FMLTR6B8H 10 009 817
	Continental Motors Corp.	-	-	X	-	-	-	FMLTR6B16H 10 009 725
	Continental Motors Corp.	-	-	-	X	-	-	FMLTR6B16J 10 009 729
	Climax Engine Mfg. Co. - 11CX76	-	-	-	-	X	-	FMLTR6B26 10 009 716
	Climax Engine Mfg. Co. - 11CX78	-	-	-	-	-	X	FMLTR6B26A 10 009 758

Ref. No.	Part Number	Part Number	Number Used						Description
1	10 000 890	8S8D	4	4	4	4	4	4	Cover screw #8-32 x 1/2
2	10 003 566	10FS4D	6	6	6	6	6	6	Terminal screw #10-24 x 1/4
3	10 011 132	N2473	6	6	6	6	6	6	Grommet
4	10 013 330	H800A	1	1	1	1	1	1	Cover plate
5	10 011 135	A800C	1	1	1	1	1	1	Cover complete
6	10 011 714	G682A	1	1	1	1	1	1	Gasket
7	10 011 134	B2982	4	4	4	4	4	4	Spacer
8	10 011 682	M2474E	1	1	1	1	1	1	Distributor block
9	10 025 969	B5969	4	4	4	4	4	4	Distributor block washer #8
10	10 000 443	8LW6	4	4	4	4	4	4	Distributor block lockwasher
11	10 010 145	8S16N	4	4	4	4	4	4	Distributor block screw #8-32 x 1
12	10 011 540	M2499	1	1	1	1	1	1	Terminal wire assembly
13	10 001 617	8S4U	1	1	1	1	1	1	Terminal screw #8-32 x 1/4
14	10 010 994	F2460A	7	7	7	7	7	7	Brush and spring
15	10 013 890	25S24A	2	2	2	2	2	2	End capscrew 1/4 x 20 x 1-1/2
16	10 013 889	25S12A	2	2	2	2	2	2	End capscrew 1/4 x 20 x 3/4
17	10 013 891	25LW2	4	4	4	4	4	4	End cap lockwasher
18	10 011 140	GY2430A	1	1	1	1	1	1	End cap
19	10 011 137	Z2430C	1	1	1	1	1	1	End cap complete

Magneto Parts List

Ref. No.	Part Number	Part Number	B8G	B8H	B16H	B16J	B26	B26A	Description
			Number Used						
20	10 001 141	10N2	3	3	3	3	3	3	Terminal nut
21	10 000 240	10LW2	1	1	1	1	1	1	Terminal screw lockwasher
22	10 011 291	M2457A	2	2	2	2	2	2	Terminal bushing
23	10 011 540	M2499	1	1	1	1	1	1	Terminal wire assembly
24	10 001 730	10S18D	1	1	1	1	1	1	Terminal screw #10-24 x 1-1/8
25	10 000 662	6S6N	4	4	4	4	4	4	Vent cover screw #6-32 x 3/8
26	10 011 232	A1232	4	4	4	4	4	4	Vent cover
27	10 000 527	A1233	4	4	4	4	4	4	Vent copper mesh
28	10 036 032	A6032A	4	4	4	4	4	4	Vent screen
29	10 010 690	E5967	1	1	1	1	1	1	Timing window capscrew
30	10 000 145	2S2V	2	2	2	2	2	2	Name plate screw #2
31	10 010 195	A195	-	-	1	-	-	-	Name plate
32	10 011 867	D195	-	-	-	-	1	1	Name plate
33	10 011 785	F195	1	1	-	-	-	-	Name plate
34	10 011 783	K195	-	-	-	1	-	-	Name plate
35	10 062 498	F2498	1	1	1	1	1	1	End cap gasket
36	10 011 167	SX2765	1	-	-	-	-	1	Distributor rotor
37	10 011 142	TX2765	-	1	1	1	1	-	Distributor rotor
38	14 054 002	54-2	1	1	1	1	1	1	Rotor setscrew #10-32 x 5/16
39	10 011 694	6S6Z	1	1	1	1	1	1	Breaker arm terminal screw #6-32 x 3/8
40	10 011 717	RX2433	1	1	1	1	1	1	Condenser
41	10 001 930	8S6U	2	2	2	2	2	2	Contact support screw #8-32 x 3/8
42	10 025 969	B5969	2	2	2	2	2	2	Contact support washer #8
43	10 042 788	D2788	1	1	1	1	1	1	Cam wick
44	10 011 673	S2437A	1	1	1	1	1	1	Point set
45	10 010 277	43N2	1	1	1	1	1	1	Cam nut
46	10 010 148	J2432	1	1	1	1	1	1	Cam
47	10 000 378	00K1	1	1	1	1	1	1	Key
48	10 000 890	8S8D	2	2	2	2	2	2	Support plate screw #8-32 x 1/2
49	10 025 969	B5969	2	2	2	2	2	2	Support plate washer #8
50	10 003 361	Y2424	1	1	1	1	1	1	Support plate
51	10 010 267	W1498	1	1	1	1	1	1	Distributor shaft snap ring
52	10 013 062	8S5NA	1	1	1	1	1	1	Condenser mounting screw #8-32 x 5/16
53	10 000 894	10S12D	3	3	3	3	3	3	Bearing support screw #10-24 x 3/4
54	10 011 382	H2471	1	1	1	1	1	1	Lead wire bracket
55	10 011 417	25SS4B	1	1	1	1	1	1	Bearing support setscrew 1/4-20 x 1/4
56	10 011 337	JY4631	1	1	1	1	1	1	Bearing support
57	10 010 162	NX5939	1	1	1	1	1	1	Distributor shaft and gear
58	10 011 044	PR2480	1	1	-	1	1	1	Magnetic rotor
59	10 011 213	RR2480	-	-	1	-	-	-	Magnetic rotor
60	10 000 379	3K1	1	1	1	1	1	1	Key
61	10 001 930	8S6U	1	1	1	1	1	1	Retainer screw #8-32 x 3/8
62	10 003 944	A2492D	1	1	1	1	1	1	Bearing retainer
63	10 105 949	C5949	1	1	1	1	1	1	Drive end bearing
64	10 010 145	8S16N	2	2	2	2	2	2	Wedge screw #8-32 x 1
65	10 000 443	8LW6	2	2	2	2	2	2	Wedge lockwasher
66	10 025 969	B5969	2	2	2	2	2	2	Wedge plate washer #8
67	10 010 017	F3236	2	2	2	2	2	2	Coil wedge
68	10 003 770	TV2477C	1	1	1	1	1	1	Coil
69	10 010 056	CU2425	1	1	1	1	1	1	Housing
70	10 001 818	6S4U	-	3	-	-	-	-	Drain hole screw #6-32 x 1/4
71	10 011 045	D1498B	1	1	1	1	1	1	Rotor shaft snap ring
72	10 112 492	A2492C	1	1	1	1	1	1	Seal inner washer
73	10 073 861	G3861	1	1	1	1	1	1	Drive end seal
74	10 012 492	A2492A	1	1	1	1	1	1	Seal outer washer
75	10 062 568	F2568	1	-	-	-	-	1	Pawl stop pin
76	10 172 568	S2568	-	1	1	1	1	-	Pawl stop pin
77	10 013 586	A1498J	1	1	1	1	1	1	Pawl lock spring
78	10 013 241	R5963	2	-	-	-	-	-	Pawl spring
79	10 013 543	T5963	-	2	2	2	-	-	Pawl spring
80	10 001 360	Q2566	2	2	2	2	2	2	Coupling pawl
81	10 172 563	S2563	-	1	-	1	-	-	Hub assembly
82	10 011 978	AW2563	-	-	-	-	-	1	Hub assembly
83	10 132 560	GZ2563	-	-	1	-	-	-	Hub assembly
84	10 152 560	KZ2563	-	-	-	-	1	-	Hub assembly
85	10 032 560	LZ2563	1	-	-	-	-	-	Hub assembly
86	10 052 565	E2565	1	1	1	1	1	1	Coupling drive spring
87	10 135 957	N5957	-	-	-	1	-	-	Coupling shell
88	10 465 957	YX5957	-	1	-	-	-	-	Coupling shell
89	15 525 957	EY5957	-	-	1	-	1	-	Coupling shell
90	15 655 957	TY5957	1	-	-	-	-	-	Coupling shell
91	10 075 958	FZ5957	-	-	-	-	-	1	Coupling shell
92	10 362 559	ET2563C	-	-	-	-	-	1	Coupling complete
93	10 352 559	FT2563C	-	-	-	-	1	-	Coupling complete
94	10 402 560	RU2563C	-	-	-	1	-	-	Coupling complete
95	10 432 564	JV2563C	1	-	-	-	-	-	Coupling complete
96	15 692 562	XY2563C	-	1	-	-	-	-	Coupling complete
97	15 562 564	NZ2563C	-	-	1	-	-	-	Coupling complete
98	10 022 572	B2572	-	1	-	-	-	-	Gear bushing
99	10 011 781	B5931B	1	1	-	1	1	1	Coupling nut washer
100	10 142 570	P2570	-	-	1	-	-	-	Coupling nut
101	10 011 740	U2570	1	1	-	1	1	1	Coupling nut