Colt Industries

Fairbanks Morse

Engine Accessories Operation

BELOIT, WISCONSIN 53511

PARTS LIST

Magneto Types 69C613-27,30,34,66,69A

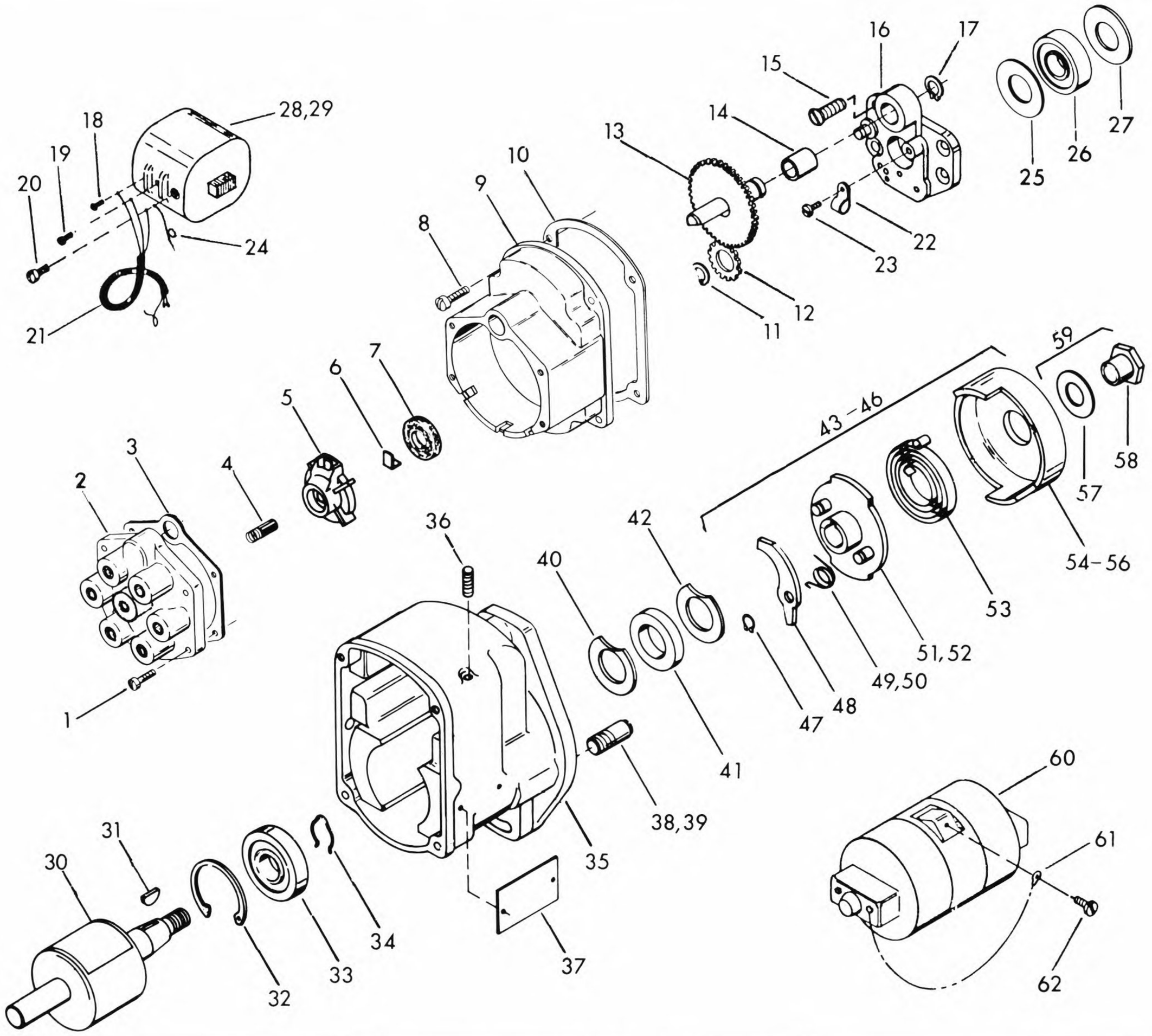

Data			69C613 -27	69C613 -30	69C613 -34	69C613 -66	69C613 -69A	Magneto Part Numbers
	Rotation		CW	CW	CW	CCW	CCW	
	Hub Angle		20°	30°	35°	30°	20°	
Engine Manufacturer	Continental Motors		X	-	-	-	-	69C613-26 10 008 585
	Minneapolis Moline		-	X	-	-	-	69C613-30 10 008 540
	Climax Engine Co. Caterpillar Tractor Co.		-	-	X	-	-	69C613-34 10 008 543
	Waukesha Motor Co.		-	-	-	X	-	69C613-66 10 008 541
	Caterpillar Tractor Co.		-	-	-	-	X	69C613-69A 10 008 595
Ref. No.	Part Number	Part Number	Number Used					Description
1	10 000 891	8S9D	**4**	4	4	4	4	Screw 8-32 x 9/16
2	10 010 244	YX800	1	1	1	1	1	End Cap cover
3	10 000 682	K682	1	1	1	1	1	Gasket
4	10 052 460	E2460B	1	1	1	1	1	Brush and spring

Magneto Parts List

Ref. No.	Part Number	Part Number	Number Used					Description
			-27	-30	-34	-66	-69A	
5	10 010 750	W2765	1	1	1	1	1	Distributor rotor
6	10 000 659	A2766	1	1	1	1	1	Spring clip
7	10 072 501	G2501	1	1	1	1	1	Distributor shaft seal
8	10 000 895	10S14D	4	4	4	4	4	Screw 10-24 x 7/8
9	10 017 176	CW2430	1	1	1	1	1	End cap
10	10 017 244	X2498	1	1	1	1	1	Gasket
11	10 041 498	D1498	1	1	1	1	1	Rotor gear snap ring
12	10 010 360	Q5952	1	1	1	1	1	Rotor gear
13	10 001 645	CX5939	1	1	1	1	1	Distributor shaft and gear
14	10 095 950	D5950C	1	1	1	1	1	Distributor bearing
15	10 017 802	8S7B	4	4	4	4	4	Screw 8-32 x 7/16
16	10 004 056	YS4631	1	1	1	1	1	Bearing support
17	10 071 498	G1498	1	1	1	1	1	Distributor gear snap ring
18	10 013 062	8S5NA	1	1	1	1	1	Screw 8-32 x 5/16
19	10 001 818	6S4U	1	1	1	1	1	Screw 6-32 x 1/4
20	10 003 566	10FS4D	1	1	1	1	1	Screw 10-32 x 1/4
21	10 017 020	CB752	1	1	1	1	1	Harness assembly
22	10 012 260	J2471	1	1	1	1	1	Harness clamp
23	10 013 062	8S5NA	1	1	1	1	1	Screw 8-32 x 5/16
24	10 017 189	Q2499A	1	1	1	1	1	Magneto ground wire
25	10 010 845	E2493	1	1	1	1	1	Grease retaining washer
26	10 145 949	D5949A	1	1	1	1	1	Cam end bearing
27	10 112 492	A2492C	1	1	1	1	1	Grease retaining washer
28	10 017 173	JV2477C	1	1	1	1	-	Coil
29	10 017 167	GV2477C	-	-	-	-	1	Coil
30	10 010 628	ER2480	1	1	1	1	1	Rotor
31	10 000 279	3K1	1	1	1	1	1	Key
32	10 101 498	B1498B	1	1	1	1	1	Snap ring
33	10 105 949	C5949	1	1	1	1	1	Drive end bearing
34	10 031 499	B1498D	1	1	1	1	1	Snap ring
35	10 252 425	AX2425	1	1	1	1	1	Housing
36	10 010 938	31SS14A	2	2	2	2	2	Setscrew 5/16-24 x 7/8
37	10 018 016	A195A	1	1	1	1	1	Nameplate
38	10 172 568	S2568	1	1	1	-	-	Pawl stop pin
39	10 062 568	F2568	-	-	-	1	1	Pawl stop pin
40	10 112 492	A2492C	1	1	1	1	1	Inner washer
41	10 103 861	K3861	1	1	1	1	1	Rotor seal
42	10 012 492	A2492A	1	1	1	1	1	Outer washer
43	10 402 560	RU2563C	1	-	-	-	-	Coupling assembly - 20°
44	10 352 560	LU2563C	-	-	1	-	-	Coupling assembly - 35°
44A	10 402 560	RU2563C	-	1	-	-	-	Coupling assembly - 30°
45	10 432 564	JV2563C	-	-	-	1	-	Coupling assembly - 30°
46	10 432 564	JV2563C	-	-	-	-	1	Coupling assembly - 20°
47	10 014 546	D1498J	2	2	2	2	2	Pawl snap ring
48	10 001 360	Q2566	2	2	2	2	2	Coupling pawl
49	10 013 543	T5963	2	2	2	-	-	Pawl spring
50	10 013 241	R5963	-	-	-	2	2	Pawl spring
51	10 172 563	S2563	1	1	1	-	-	Coupling hub
52	10 032 560	LZ2563	-	-	-	1	1	Coupling hub
53	10 052 562	E2565	1	1	1	1	1	Drive spring
54	10 135 957	N5957	1	1	-	-	-	Impulse coupling shell
55	10 355 957	LX5957	-	-	1	-	-	Impulse coupling shell
56	15 655 957	TY5957	-	-	-	1	1	Impulse coupling shell
57	10 011 781	B5931B	1	1	1	1	1	Coupling washer
58	10 011 740	U2570	1	1	1	1	1	Coupling nut
59	10 017 133	SK140	1	1	1	1	1	Coupling hardware
60	10 014 296	PPT2477P	1	1	1	1	1	Transformer
61	10 011 709	M2499A	1	1	1	1	1	Transformer ground wire
62	10 001 617	8S4U	1	1	1	1	1	Screw 8-32 x 1/4