FAIRBANKS MORSE
A MAJOR INDUSTRIAL COMPONENT OF
FAIRBANKS WHITNEY

MAGNETO PARTS DATA

MAGNETO and ENGINE ACCESSORIES DIVISION • BELOIT, WISCONSIN

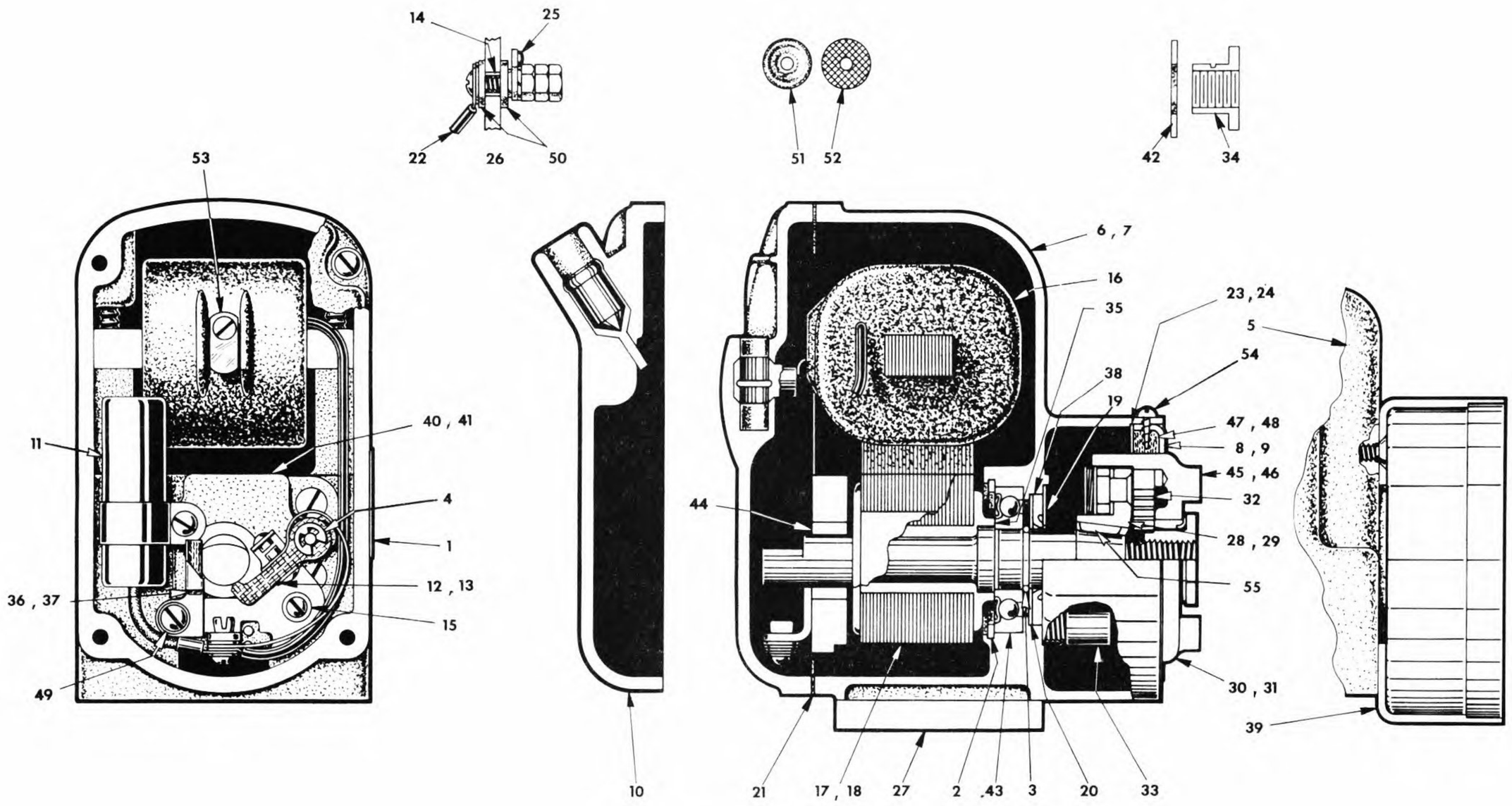

RENEWAL PARTS DATA
TYPES FM-X1A43A, FM-X1A47, FM-X1A50, FM-X1A51, FM-X1A52, FM-X1A52A MAGNETOS

Illustration shown is of a CW rotation magneto. Parts for a CCW rotation magneto are similar but in a different position.

Data	Engine Manufacturer and Specification Number	Type Magnetos					
		FM-X1A43A	FM-X1A47	FM-X1A50	FM-X1A51	FM-X1A52	FM-X1A52A
Rotation		CW	CCW	CW	CW	CCW	CW
Imp. Cplg.		UC	UA	UC	-	-	UC
Lag Angle		25°	20°	12°	-	-	10°
	Atlas Imperial Diesel Engine Co.	X	-	-	-	-	-
	Easthope Bros.	-	X	-	-	-	-
	Fuller & Johnson Co.	-	-	X	-	-	-
	Rototiller Inc.	-	-	-	X	-	-
	Graveley Tractor Inc.	-	-	-	-	X	X

Ref. No.	Order by Part No.	Name of Part	Number Used					
			FM-X1A43A	FM-X1A47	FM-X1A50	FM-X1A51	FM-X1A52	FM-X1A52A
1	A195	Name Plate	1	1	1	1	1	1
2	B1498B	Drive End Bearing Snap Ring	1	1	1	1	1	1
3	B1498D	Rotor Shaft Snap Ring	1	1	1	1	1	1
4	C1498G	Fulcrum Pin Snap Ring	1	1	1	1	1	1
5	V2425	Housing	-	1	-	1	1	-
6	AY2425	Housing	-	-	1	-	-	-
7	CY2425	Housing	1	-	-	-	-	1

PRINTED IN U.S.A.

Ref. No.	Order by Part No.	Name of Part	Number Used					
			FM-X1A43A	FM-X1A47	FM-X1A50	FM-X1A51	FM-X1A52	FM-X1A52A
8	D2428	Outer Shell Cupped Washer	-	1	-	-	-	-
9	E2428	Outer Shell Cupped Washer	1	-	1	-	-	1
10	BZ2430	End Cap	1	1	1	1	1	1
	10S12D	End Cap Screw - #10-24x$\frac{3}{4}$"	4	4	4	4	4	4
11	AXMR2433	Condenser	1	1	1	1	1	1
	8S4U	Condenser Screw - #8-32x$\frac{1}{4}$"	1	1	1	1	1	1
12	A2437A	Breaker Point Assembly	1	-	1	1	-	1
13	B2437A	Breaker Point Assembly	-	1	-	-	1	-
	6S6Z	Terminal Screw - #6-32x$\frac{3}{8}$"	1	1	1	1	1	1
	6S6U	Support Screw - #6-32x$\frac{3}{8}$"	1	1	1	1	1	1
	8S6U	Support Screw - #8-32x$\frac{3}{8}$"	1	1	1	1	1	1
14	K2457A	Ground Switch Bushing	1	1	1	1	1	1
15	D2458	Support Screw Plate Washer - #6	1	1	1	1	1	1
16	T2477C	Coil	1	1	1	1	1	1
	31SS14A	Coil Bridge Screw - 5/16"-24x$\frac{7}{8}$"	2	2	2	2	2	2
17	UY2480	Magnetic Rotor	1	-	1	1	-	1
18	VY2480	Magnetic Rotor	-	1	-	-	1	-
19	A2492A	Seal Outer Washer	1	1	1	1	1	1
20	A2492C	Seal Inner Washer	1	1	1	1	1	1
21	H2498	End Cap Gasket	1	1	1	1	1	1
22	J2499A	Wire Assembly	1	1	1	1	1	1
23	D2502	Shell Flat Washer	-	1	-	-	-	-
24	E2502	Shell Flat Washer	1	-	1	-	-	1
25	D2514	Switch Lever	1	1	1	1	1	1
26	L2514C	Switch Assembly	1	1	1	1	1	1
	8S14N	Switch Screw - #8-32x$\frac{7}{8}$"	1	1	1	1	1	1
	8LW5	Switch Lockwasher	1	1	1	1	1	1
	8N1	Switch Nut	3	3	3	3	3	3
27	E2561A	Base Plate	-	1	-	-	-	-
	25S12G	Base Plate Screw - $\frac{1}{4}$"-20x$\frac{3}{4}$"	-	2	-	-	-	-
28	V2563	Hub Assembly	1	-	1	-	-	1
29	AX2563	Hub Assembly	-	1	-	-	-	-
30	V2563C	Coupling Complete	1	-	1	-	-	1
31	LX2563C	Coupling Complete	-	1	-	-	-	-
32	D2565	Drive Spring	1	1	1	-	-	1
33	S2568	Pawl Stop Pin	1	-	1	-	-	1
34	U2570	Coupling Nut	1	1	1	-	-	1
35	C2723	Bearing Shim	2	2	2	2	2	2
36	G2788	Cam Wick	1	-	1	1	-	1
37	H2788	Cam Wick	-	1	-	-	1	-
38	G3861	Rotor Shaft Seal	1	1	1	1	1	1
39	B4591	Outer Shell	-	1	-	-	-	-
	25S6G	Shell Screw - $\frac{1}{4}$"-20x$\frac{3}{8}$"	-	2	-	-	-	-
40	V4631	Bearing Support	1	-	1	1	-	1
41	W4631	Bearing Support	-	1	-	-	1	-
	8S6G	Support Screw - #8-32x$\frac{3}{8}$"	4	4	4	4	4	4
42	B5931B	Coupling Nut Lockwasher	1	1	1	-	-	1
43	C5949	Drive End Bearing	1	1	1	1	1	1
44	A5950A	Cam End Bearing	1	1	1	1	1	1
45	P5957	Coupling Shell	-	1	-	-	-	-
46	R5957	Coupling Shell	1	-	1	-	-	1
47	C5968	Shell Felt Washer	-	1	-	-	-	-
48	D5968	Shell Felt Washer	1	-	1	-	-	1
49	B5969	Support Plate Washer - #8	1	1	1	1	1	1
50	C6018	Insulating Washer	2	2	2	2	2	2
51	B6030A	Vent Cover	2	2	2	2	2	2
	6S4U	Vent Screw - #6-32x$\frac{1}{4}$"	2	2	2	2	2	2
52	C6032B	Vent Screen	2	2	2	2	2	2
53	B6120	Coil Clip	1	1	1	1	1	1
	6S3W	Clip Screw - #6-32x3/16"	1	1	1	1	1	1
54	B6222	Cupped Washer Screw	2	2	2	-	-	2
55	3K1	Key	1	1	1	-	-	1