FAIRBANKS MORSE
A MAJOR INDUSTRIAL COMPONENT OF
FAIRBANKS WHITNEY

MAGNETO PARTS DATA

MAGNETO and ENGINE ACCESSORIES DIVISION • BELOIT, WISCONSIN

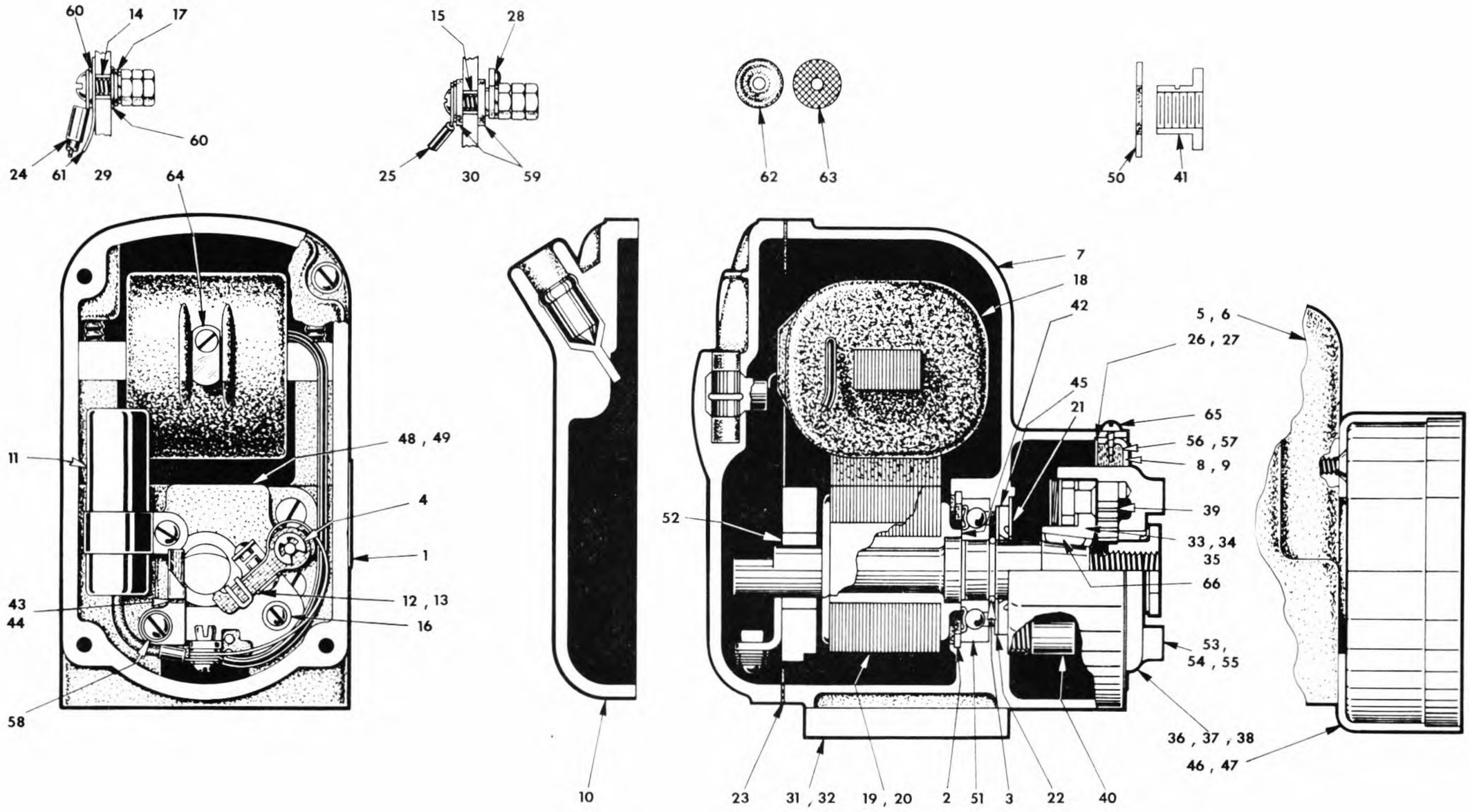

RENEWAL PARTS DATA
TYPES FM-X1A52B, FM-X1A56, FM-X1A59, FM-X1A60, FM-X1A79, FM-X1A79B MAGNETOS

Illustration shown is of a CW rotation magneto. Parts for a CCW rotation magneto are similar but in a different position.

Data	Engine Manufacturer and Specification Number	Type Magnetos					
		FM-X1A52B	FM-X1A56	FM-X1A59	FM-X1A60	FM-X1A79	FM-X1A79B
Rotation		CW	CCW	CW	CCW	CW	CW
Imp. Cplg.		UC	UAL	UA	UAL	UC	UC
Lag Angle		10°	30°	25°	25°	20°	20°
	Graveley Tractor Inc.	X	-	-	-	-	-
	New Beeman Tractor Co.	-	X	-	-	-	-
	New Idea Inc.	-	-	X	-	-	-
	New Way Engine Co.	-	-	-	X	-	-
	Graham Paige Motor Co.	-	-	-	-	X	X

Ref. No.	Order by Part No.	Name of Part	Number Used					
			FM-X1A52B	FM-X1A56	FM-X1A59	FM-X1A60	FM-X1A79	FM-X1A79B
1	A195	Name Plate	1	1	1	1	1	1
2	B1498B	Drive End Bearing Snap Ring	1	1	1	1	1	1
3	B1498D	Rotor Shaft Snap Ring	1	1	1	1	1	1
4	C1498G	Fulcrum Pin Snap Ring	1	1	1	1	1	1
5	V2425	Housing	-	-	1	1	-	-
6	QX2425	Housing	-	1	-	-	-	-
7	AY2425	Housing	1	-	-	-	1	1

PRINTED IN U.S.A.

Ref. No.	Order by Part No.	Name of Part	Number Used					
			FM-X1A52B	FM-X1A56	FM-X1A59	FM-X1A60	FM-X1A79	FM-X1A79B
8	D2428	Outer Shell Cupped Washer	-	1	1	1	-	-
9	E2428	Outer Shell Cupped Washer	1	-	-	-	1	1
10	BZ2430	End Cap	1	1	1	1	1	1
	10S12D	End Cap Screw - #10-24x$\frac{3}{4}$"	4	4	4	4	4	4
11	AXMR2433	Condenser	1	1	1	1	1	1
	8S4U	Condenser Screw - #8-32x$\frac{1}{4}$"	1	1	1	1	1	1
12	A2437A	Breaker Point Assembly - CW	1	-	1	-	1	1
13	B2437A	Breaker Point Assembly - CCW	-	1	-	1	-	-
	6S6Z	Terminal Screw - #6-32x$\frac{3}{8}$"	1	1	1	1	1	1
	6S6U	Support Screw - #6-32x$\frac{3}{8}$"	1	1	1	1	1	1
	8S6U	Support Screw - #8-32x$\frac{3}{8}$"	1	1	1	1	1	1
14	E2457A	Ground Switch Bushing	-	-	-	-	1	-
15	K2457A	Ground Switch Bushing	1	1	1	1	-	1
16	D2458	Support Screw Plate Washer - #6	1	1	1	1	1	1
17	D2458	Ground Switch Plate Washer - #6	-	-	-	-	1	-
18	T2477C	Coil	1	1	1	1	1	1
	31SS14A	Coil Bridge Screw - 5/16"-24x$\frac{7}{8}$"	2	2	2	2	2	2
19	UY2480	Magnetic Rotor	1	-	1	-	1	1
20	VY2480	Magnetic Rotor	-	1	-	1	-	-
21	A2492A	Seal Outer Washer	1	1	1	1	1	1
22	A2492C	Seal Inner Washer	1	1	1	1	1	1
23	H2498	End Cap Gasket	1	1	1	1	1	1
24	B2499A	Wire Assembly	-	-	-	-	1	-
25	J2499A	Wire Assembly	1	1	1	1	-	1
26	D2502	Shell Flat Washer	-	1	1	1	-	-
27	E2502	Shell Flat Washer	1	-	-	-	1	1
28	D2514	Switch Lever	1	1	1	1	-	1
29	A2514B	Switch Assembly	-	-	-	-	1	-
30	L2514C	Switch Assembly	1	1	1	1	-	1
	6S10N	Switch Screw - #6-32x$\frac{5}{8}$"	-	-	-	-	1	-
	8S14N	Switch Screw - #8-32x$\frac{7}{8}$"	1	1	1	1	-	1
	6LW2	Switch Lockwasher	-	-	-	-	1	-
	8LW5	Switch Lockwasher	1	1	1	1	-	1
	6N1	Switch Nut	-	-	-	-	2	-
	8N1	Switch Nut	3	3	3	3	-	3
31	A2561A	Base Plate	-	-	1	1	-	-
32	K2561A	Base Plate	1	-	-	-	-	-
	25S12G	Base Plate Screw - $\frac{1}{4}$-20x$\frac{3}{4}$"	4	-	2	2	-	-
33	V2563	Hub Assembly	1	-	-	-	1	1
34	AX2563	Hub Assembly	-	1	-	1	-	-
35	BX2563	Hub Assembly	-	-	1	-	-	-
36	V2563C	Coupling Complete	1	-	-	-	1	1
37	KX2563C	Coupling Complete	-	-	1	-	-	-
38	LX2563C	Coupling Complete	-	1	-	1	-	-
39	D2565	Drive Spring	1	1	1	1	1	1
40	S2568	Pawl Stop Pin	1	-	-	-	1	1
41	U2570	Coupling Nut	1	1	1	1	1	1
42	C2723	Bearing Shim	2	2	2	2	2	2
43	G2788	Cam Wick	1	-	1	-	1	1
44	H2788	Cam Wick	-	1	-	1	-	-
45	G3861	Shaft Seal	1	1	1	1	1	1
46	B4591	Outer Shell Assembly	-	1	-	-	-	-
	25S6G	Shell Assembly Screw - $\frac{1}{4}$"-20x$\frac{3}{8}$"	-	4	4	-	-	-
47	C4591	Outer Shell Assembly	-	-	1	-	-	-
48	V4631	Bearing Support	1	-	1	-	1	1
49	W4631	Bearing Support	-	1	-	1	-	-
	8S6G	Support Screw - #8-32x$\frac{3}{8}$"	4	4	4	4	4	4
50	B5931B	Coupling Nut Lockwasher	1	1	1	1	1	1
51	C5949	Drive End Bearing	1	1	1	1	1	1
52	A5950A	Cam End Bearing	1	1	1	1	1	1
53	P5957	Coupling Shell	-	1	-	1	-	-
54	Q5957	Coupling Shell	-	-	1	-	-	-
55	R5957	Coupling Shell	1	-	-	-	1	1
56	C5968	Shell Felt Washer	-	1	1	1	-	-
57	D5968	Shell Felt Washer	1	-	-	-	1	1
58	B5969	Support Plate Washer	1	1	1	1	1	1
59	C6018	Insulating Washer	2	2	2	2	-	2
60	K6018	Insulating Washer	-	-	-	-	2	-
61	L6018	Terminal Insulator	-	-	-	-	1	-
62	B6030A	Vent Cover	2	2	2	2	2	2
	6S4U	Vent Screw - #6-32x$\frac{1}{4}$"	2	2	2	2	2	2
63	C6032B	Vent Screen	2	2	2	2	2	2
64	B6120	Coil Clip	1	1	1	1	1	1
	6S3W	Clip Screw - #6-32x3/16"	1	1	1	1	1	1
65	B6222	Cupped Washer Screw	2	2	2	2	2	2
66	3K1	Key	1	1	1	1	1	1