Instructions No. 2907C

FAIRBANKS-MORSE

TYPES FM-XV4B7 AND FM-XVE4B7G MAGNETOS

Adapted only to Wisconsin VE4, VF4, and VP4D Engines

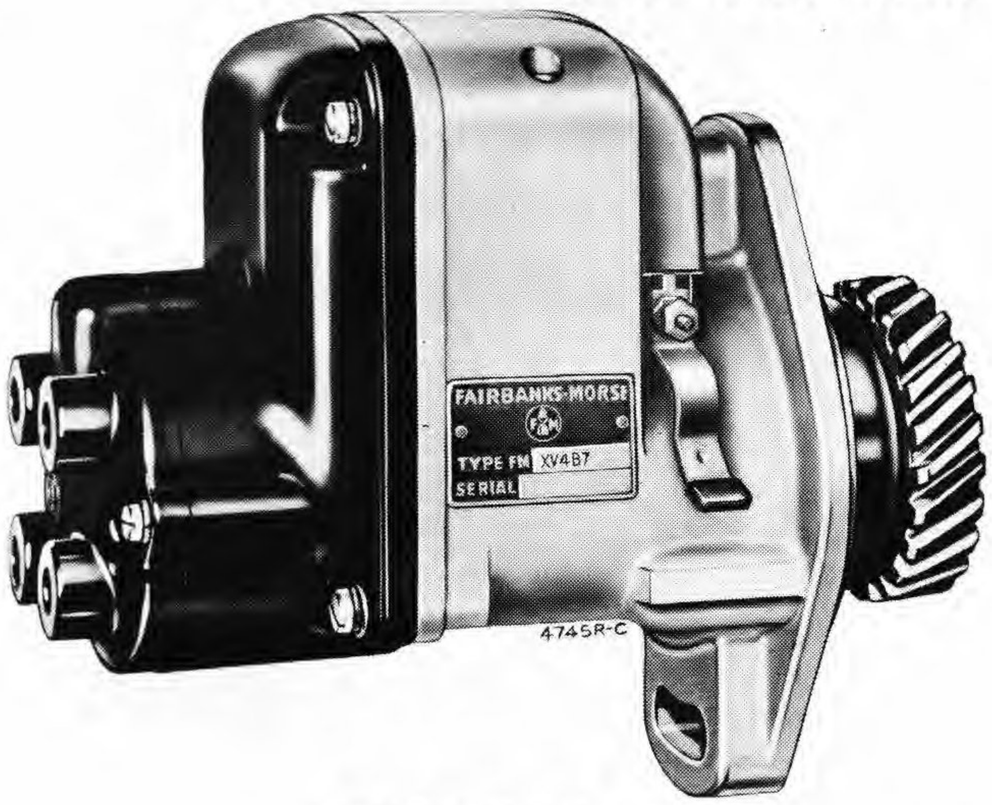

FM-XV4B7

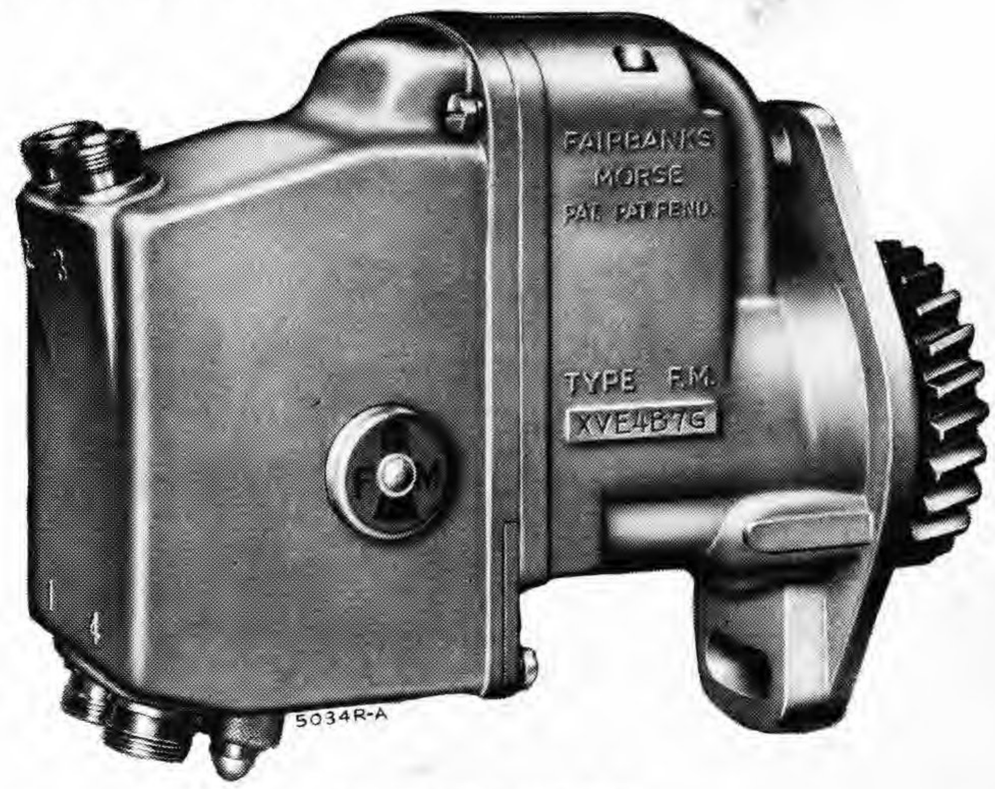

FM-XVE4B7G

Field Service and Adjustment Information

GENERAL DESCRIPTION

Types FM-XV4B7 and FM-XVE4B7G magnetos are special units designed and built for use on Engine Models VE4, VF4, and VP4D, manufactured by the Wisconsin Motor Corporation. These engines are all modifications of the same basic design, each having a firing interval of 180°-270°-180°-90°. Types FM-XV4B7 and FM-XVE4B7G magnetos, each having a four pole rotor and a four lobe cam, meet this requirement by producing four sparks per revolution of the rotor, which runs at crankshaft speed. In a complete cycle of two engine revolutions, four sparks are used for ignition and four fire in the exhaust. These magnetos have the standard SAE flange mounting, but have a special coupling and drive gear arrangement which requires an extended rotor shaft.

SERVICE PROCEDURE

Improper functioning of the magneto is often believed to be the cause of engine difficulty arising from other sources, such as a flooded carburetor, insufficient fuel or air, loose ignition connections, or a defective spark plug. Since a brief engine inspection will often localize the trouble before the magneto is reached, it prevents maladjustment of parts in good condition. Type FM-X magnetos are built in sealed frames and should be opened only when it is certain that the ignition spark produced is unsatisfactory. This condition may be determined by ignition spark tests which are easily made in the field.

TESTING THE IGNITION SPARK

With properly adjusted spark plugs in good condition, the ignition spark should be strong enough to bridge a short gap in addition to the actual spark plug discharge. This may be determined by holding the end of the ignition cable not more than 1/16 in. away from the spark plug terminal. The engine should not misfire when this is done. Ignition tests made while any part of the system is wet are useless.

TESTING THE MAGNETO SPARK

Remove all the ignition cables from the magneto end cap sockets and insert a short, stiff wire in one of the sockets. Bend this wire to within 1/8 in. of the engine block. Turn the engine over slowly one complete revolution and watch carefully for the spark discharge which should occur every time the impulse coupling releases. Repeat this test with the wire in each of the other sockets. If a strong spark is observed with the wire in each socket, it is recommended that the magneto be eliminated as the source of difficulty and that the cables, terminals, and spark plugs be thoroughly inspected. If no spark occurs, the ignition switch should be examined to make certain it has not accidentally become closed.

END CAP COVER REMOVAL

If no spark is obtained from one or more of the magneto terminals, remove the end cap cover, taking care not to damage the gasket. Remove the distributor rotor and clean the distributor compartment thoroughly, observing whether the air passages are open or clogged. IT IS EXTREMELY IMPORTANT THAT THESE AIR PASSAGES BE KEPT FREE OF DIRT AND OTHER FOREIGN MATTER. Examine the high-tension lead brush and replace it if noticeably worn or damaged. This brush should move freely in its holder and should be under slight spring pressure.

SERVICE OF BREAKER POINTS

Before examining the breaker points, it is first necessary to remove the end cap, which is sealed to the metal frame by a gasket joint. The breaker points should then be inspected for evidence of pitting or pyramiding. A small tungsten file or fine stone may be used to resurface the points except in the case of badly worn or pitted points, which should be replaced. If it is necessary to resurface or replace the breaker points, it will also be necessary to readjust them to their proper clearance, which is 0.015 in. at full separation. This adjustment is made in the following manner: Loosen the locking screws identified in Fig. 1 shown below. Then move the contact support until the proper breaker point clearance is obtained. This is accomplished by means of a screwdriver inserted in the horizontal slot at the bottom of the contact support and pivoted between the two small bosses on the

Instructions No. 2907C
Supersedes Instructions No. 2907B
June 1, 1954

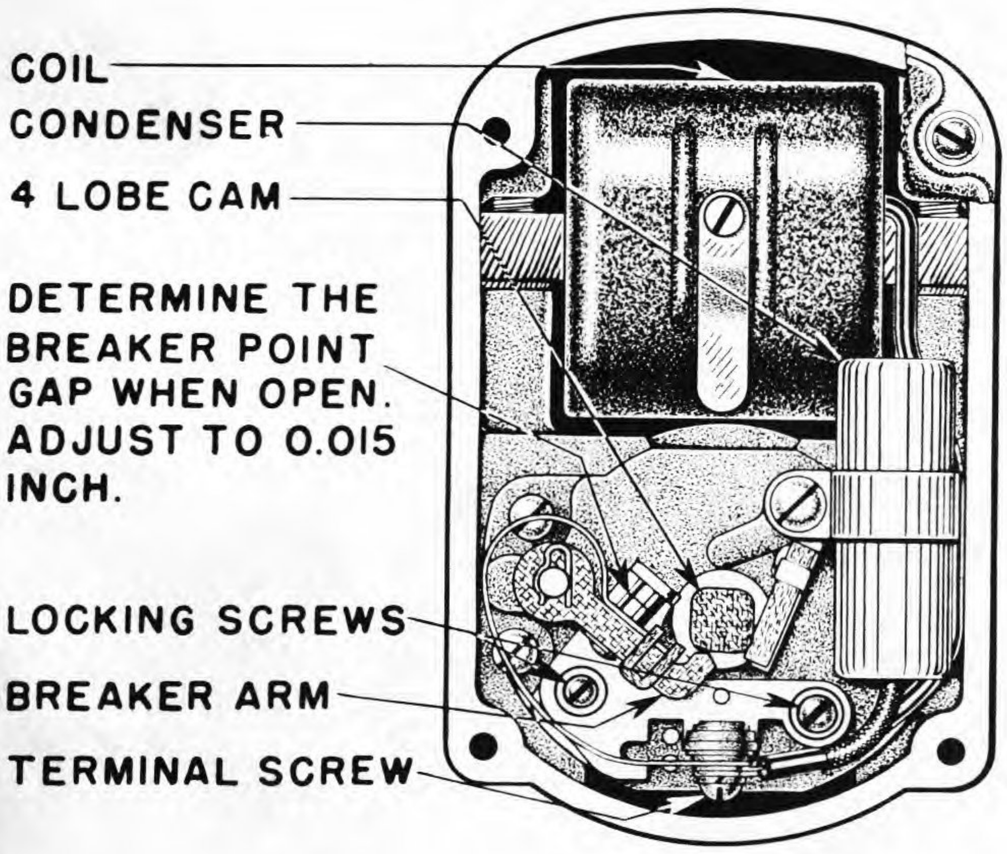

Fig. 1. End View of Type FM-XV4B Magneto.

bearing support. Lock the assembly in place by tightening the locking screws and take a final measurement of the breaker point gap after the locking screws are tightened.

FURTHER FIELD SERVICE NOT RECOMMENDED

The cam felt wick, if dry or hard, should be replaced by a new factory-impregnated wick. This is done by substituting a new cam wick and holder assembly for the old assembly. Other than this, Type FM-XV magnetos do not require field lubrication and any attempt to oil or grease the bearings is inadvisable. The lubricants should be renewed only during a complete overhaul of the magneto by a Factory-Authorized Magneto Service Station.

SEALING MAGNETO

Before replacing the end cap on the magneto frame, clean the contact surfaces between the cap and the frame. Then coat both contact surfaces completely with Fairbanks-Morse FMCO2 Gasket Varnish, place a new gasket in the joint, and mount the end cap on the frame, tightening the four screws securely.

SPECIAL DRIVE GEAR

Types FM-XV4B7 and FM-XVE4B7G magnetos, as adapted to engines manufactured by the Wisconsin Motor Corporation, are equipped with special drive gears mounted directly on the impulse coupling. The gear is a slip fit on the extended coupling nut, since movement of the gear with respect to the coupling nut and rotor shaft occurs during the impulse period. If it is necessary at any time to remove the drive gear, special care must be exercised in reassembly. Remove the end cap cover (the entire end cap on radio shielded units) and turn the rotor until the contact segment is in firing position for No. 1 cylinder as shown in Fig. 2. Notice that the No. 1 firing position of the contact segment is diametrically opposed in the two magnetos. With the distributor rotor in the proper position fit the gear to the impulse coupling lugs so that the prick punch mark on the rim of the gear is in the position shown in Fig. 2.

RADIO-SHIELDED MAGNETOS

Complete radio shielding of the ignition system is required in numerous applications, the necessary modification of the magneto being designated as the Type FM-XVE4B7G. On this unit the plastic end cap and end cap cover are replaced by an all-metal end cap in which an insulated distributor block is fitted. Special outlets are provided for the high tension leads so that connection can be made to the shielded cables. A push-button ground terminal is located on the lower side of the end cap. In addition, an auxiliary terminal is provided to connect a ground wire from the magneto to a remote grounding switch.

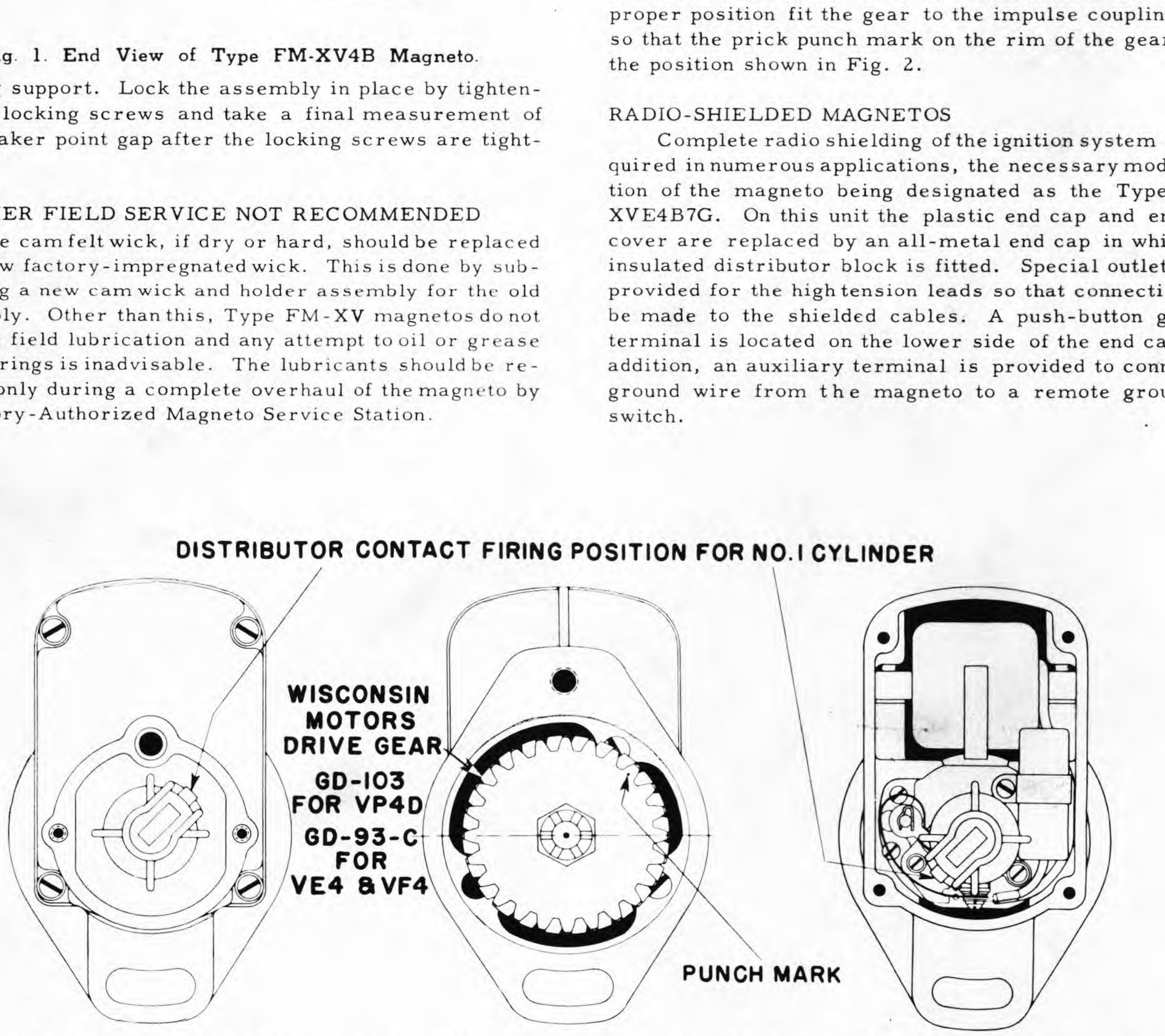

Fig. 2. Distributor Contact Firing Position and Drive Gear Marking.

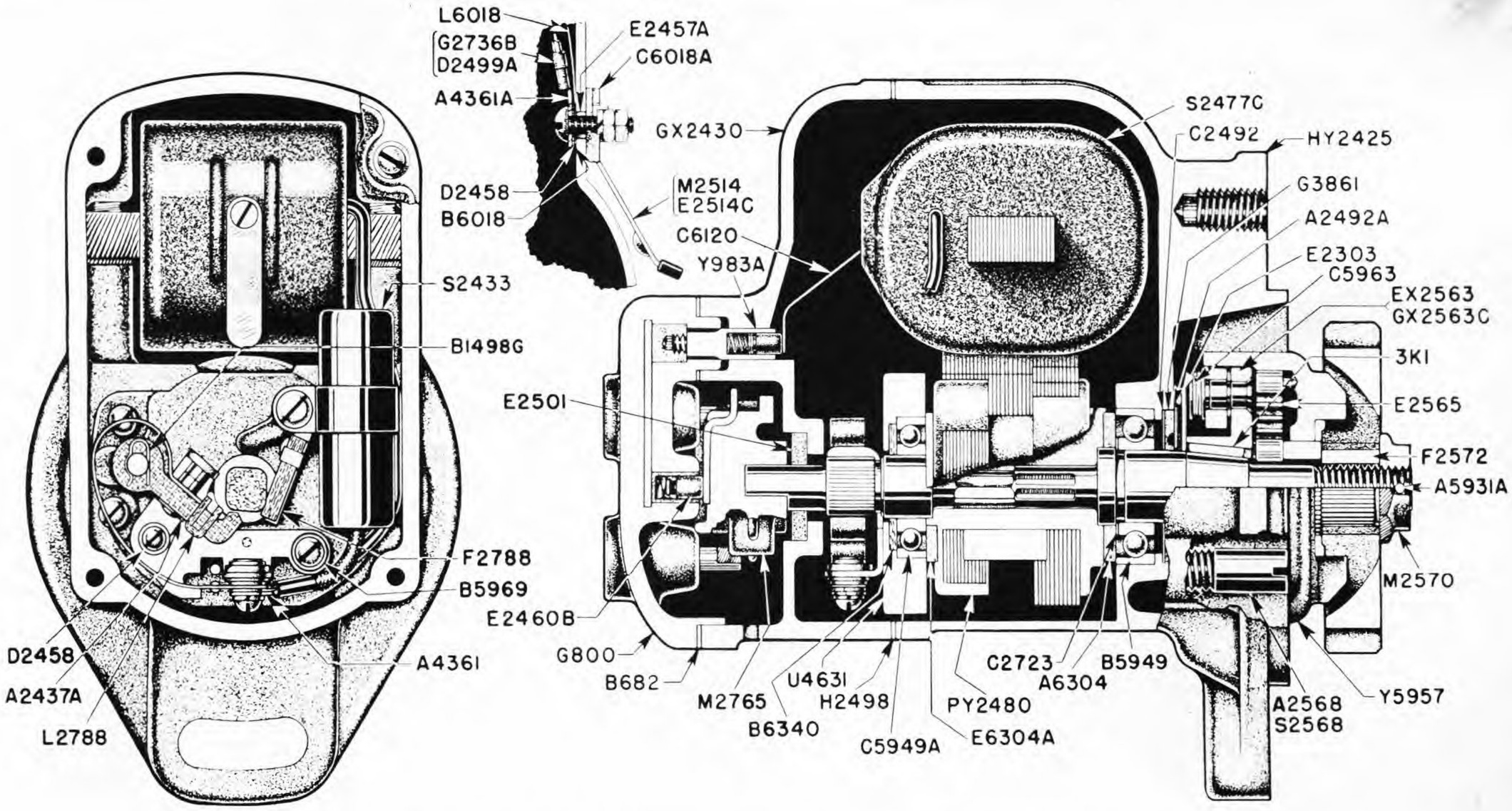

Type FM-XV4B7 Magneto (Standard)

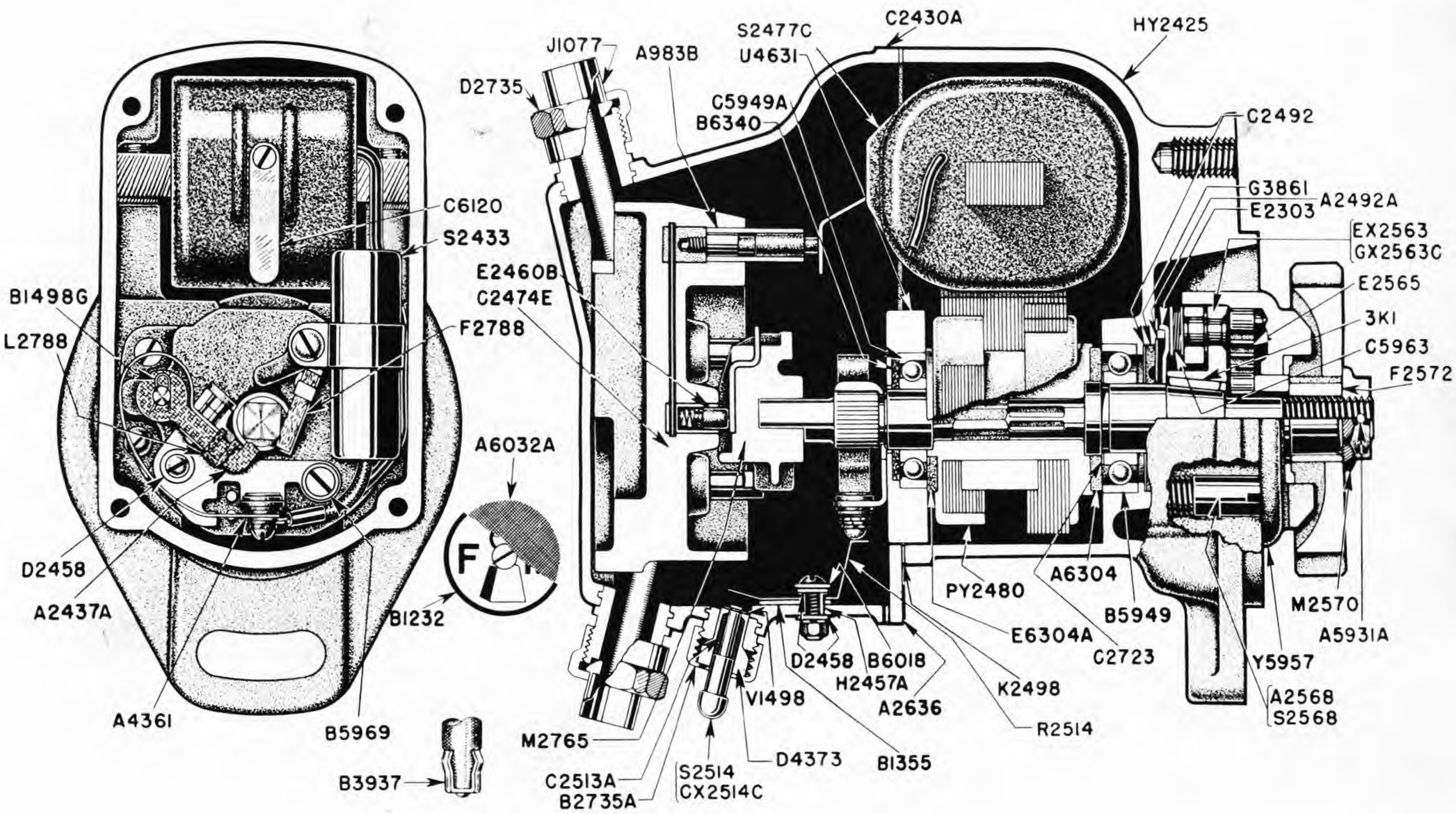

Type FM-XVE4B7G Magneto (Radio Shielded)

TYPES FM-XV4B7 AND FM-XVE4B7G MAGNETOS

Order by Part No.	Name of Part	No. Used FM-XV4B7	No. Used FM-XVE4B7G
B682	End Cap Cover Gasket	1	-
G800	End Cap Cover	1	-
8S9D	End Cap Cover Screw (#8-32x9/16")	2	-
A983B	High Tension Lead Assembly	-	1
Y983A	High Tension Lead Rod	1	-
J1077	Cable Outlet Ferrule	-	4
B1232	Vent Screen Shield	-	2
6S6N	Vent Screen Shield Screw (#6-32x3/8")	-	2
B1355	Ground Switch Strip Guide	-	1
V1498	Ground Switch Snap Ring	-	1
B1498G	Fulcrum Pin Snap Ring	1	1
E2303	Oil Slinger Baffle Disc*	1	1
HY2425	Frame	1	1
C2430A	End Cap (Inc. B1232, A6032A, 6S6N)	-	1
GX2430	End Cap	1	-
10S8A	End Cap Screw (#10-24x1/2")	-	2
10S10A	End Cap Screw (#10-24x5/8")	-	2
10S12D	End Cap Screw (#10-24x3/4")	4	-
S2433	Condenser Assembly	1	1
8S6D	Condenser Mounting Screw (#8-32x3/8")	1	1
A2437A	Breaker Arm, Stationary Bracket, and Points	1	1
6S5N	Breaker Arm Terminal Screw (#6-32x5/16")	1	1
6LW2	Breaker Arm Terminal Screw Lockwasher	1	1
6S6N	Contact Support Locking Screw (#6-32x3/8")	1	1
6LW2	Contact Support Locking Screw Lockwasher	1	1
8S6N	Contact Support Locking Screw (#8-32x3/8")	1	1
8LW3	Contact Support Locking Screw Lockwasher	1	1
E2457A	Primary Ground Screw Bushing	1	-
H2457A	Primary Ground Screw Bushing*	-	1
D2458	Contact Support Locking Screw Washer	1	1
D2458	Primary Ground Switch Plate Washer	1	2
E2460B	Coil Lead Brush and Spring	1	1
C2474E	Distributor Block*	-	1
8S8D	Distributor Block Screw (#8-32x1/2")	-	4
H2477	Coil Assembly* (Taped)	1	1
S2477C	Coil Assembly* (Molded) (H2477C inc. C6120, 6S3N, 6LW1)	1	1
25SS14A	Coil Bridge Setscrew (1/4-20x7/8")	2	2
PY2480	Magnetic Rotor Assembly	1	1
A2492A	Rotor Shaft Seal Outer Washer	1	1
C2492	Rotor Shaft Seal Inner Washer	1	1
H2498	End Cap to Frame Gasket	1	-
K2498	End Cap to Frame Gasket (Lead)	-	1
D2499A	Primary Terminal Wire Assembly (Inc. G2736B, A4361, A4361A)	1	-
E2501	Distributor Shaft Seal	1	-
C2513A	Ground Switch Button Spring	-	1
CX2514C	Ground Switch Push Button Assembly (Inc. V1498, C2513A, S2514, D4373)	-	1
E2514C	Insulated Lever Ground Switch Assembly (Inc. M2514, E2457A, D2458, A4361A, B6018, C6018A, 6S10N, 6N1, 6LW1)	1	-
M2514	Ground Switch Insulated Lever	1	-
R2514	Primary Ground Switch Strip	-	1
S2514	Primary Ground Switch Push Button	-	1
6S8N	Ground Switch Screw (#6-32x1/2")	-	1
6S12N	Ground Switch Screw (#6-32x3/4")	1	-
6N1	Ground Screw Nut (#6-32)	3	1
6LW1	Ground Screw Lockwasher	-	1
6LW2	Ground Screw Lockwasher	1	-
EX2563	Impulse Coupling Hub (UB-9, CW) (EX2563 inc. C5963)	1	1
GX2563C	Impulse Coupling Assembly (UB-9, CW) (GX2563C inc. EX2563, E2565, Y5957)	1	1
E2565	Impulse Coupling Drive Spring	1	1
A2568	Impulse Coupling Pawl Stop Pin	1	1
S2568	Impulse Coupling Pawl Stop Pin	1	1
M2570	Impulse Coupling Nut	1	1
F2572	Impulse Coupling Bushing	1	1
A2636	End Cap Extension Plate	-	1
10S6G	End Cap Extension Plate Screw (#10-24x3/8")	-	2
C2723	Rotor Shaft Shim (use as needed)	2	2
B2735A	Primary Ground Cable Outlet Nut	-	1
D2735	High Tension Cable Outlet Nut	-	4
E2736	Coil Lead Wire Tube (Taped Coil)	1	1
G2736B	Primary Terminal Wire Tube	1	-
M2765	Distributor Rotor*	1	1
F2788	Cam Wick and Holder Assembly	1	1
L2788	Breaker Arm Felt Wick	1	1
G3861	Rotor Shaft Seal	1	1
B3937	Cable Clip	-	4
A4361	Lead Wire Terminal for No. 8 Screw	3	2
A4361A	Lead Wire Terminal for No. 6 Screw	1	-
D4373	Primary Ground Switch Bushing	-	1
U4631	Bearing Support Assembly	1	1
8S6D	Bearing Support Screw (#8-32x3/8")	4	4
A5931A	Impulse Coupling Nut Lockwire	1	1
B5949	Rotor Drive End Ball Bearing	1	1
C5949A	Rotor Ball Bearing (Opp. Drive End)	1	1
Y5957	Impulse Coupling Shell	1	1
C5963	Impulse Coupling Pawl Spring	2	2
B5969	Contact Support Locking Screw Washer	1	1
B6018	Ground Screw Insulating Washer	1	-
C6018A	Ground Screw Insulating Block	1	-
L6018	Ground Switch Terminal Insulator	1	-
A6032A	Vent Screen	-	2
C6120	Coil Clip (Molded Coil)	1	1
6S3N	Coil Clip Screw (#6-32x3/16")	1	1
6LW1	Coil Clip Screw Lockwasher	1	1
A6304	Rotor Bearing Seal (Drive End)	1	1
E6304A	Rotor Bearing Seal (Opp. Drive End)	1	1
B6340	Bearing Support Felt, Seal	1	1
3K1	Key (Rotor to Impulse Coupling)	1	1

*Fungus treated part

FAIRBANKS, MORSE & CO.
Manufacturers

Executive Offices
Chicago, Illinois

563507-1769-055405M-BDN
324241-1789-065408M-BDN

Magneto Sales & Factory
Beloit, Wisconsin

Printed in U.S.A.