FAIRBANKS-MORSE

MAGNETO DIVISION
BELOIT, WISCONSIN

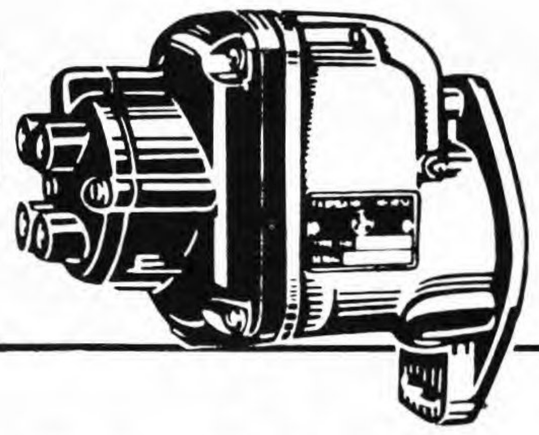

INSTRUCTIONS 2911C
SUPERSEDES INSTRUCTION 2911 B
September 1957

TYPES FM-X4A AND FM-X4B MAGNETOS

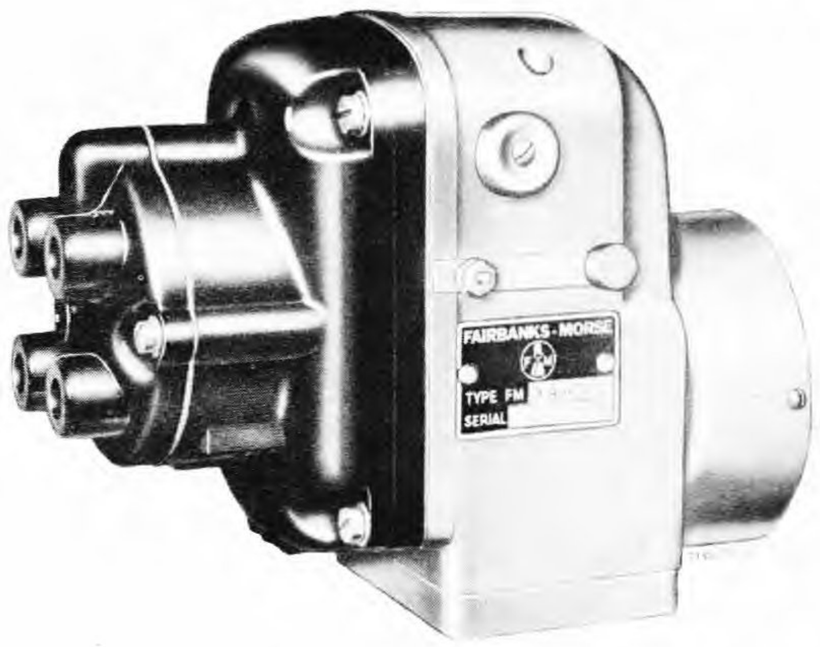

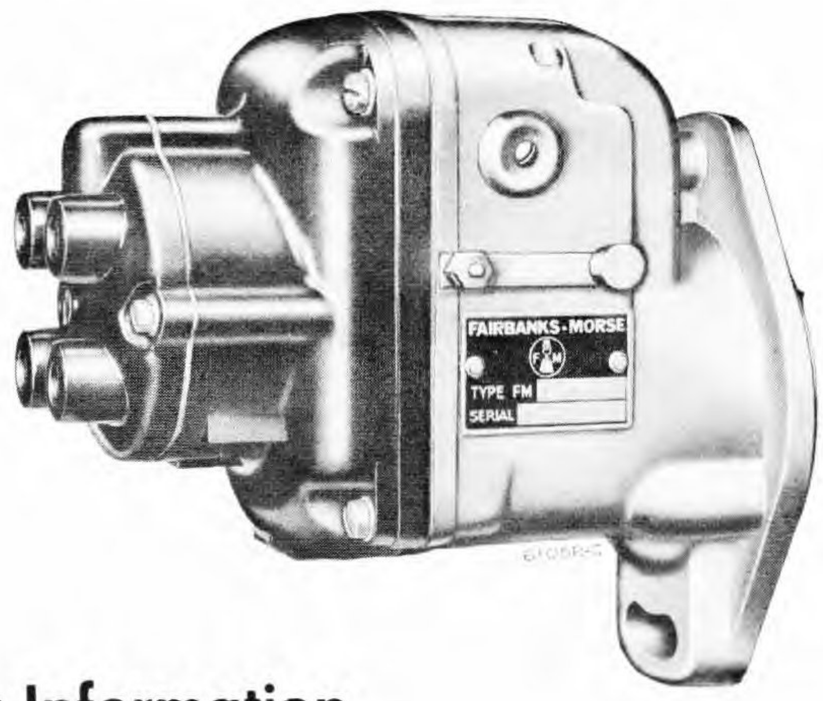

Service and Adjustment Information

GENERAL DESCRIPTION

Modern ignition systems are carefully designed to provide quick, easy starting and maximum dependability of operation with minimum adjustment and service. Due to advanced engineering and sturdy construction, the Fairbanks-Morse magnetos have become field performance leaders. The compact powerful Alnico rotor assures an intensely hot spark even under the most difficult operating conditions. Field adjustments are rarely necessary and, although simple, they should be made only in accordance with the following instructions.

SERVICE PROCEDURE

Improper functioning of the magneto is often believed to be the cause of engine difficulty arising from other sources, such as a flooded carburetor, insufficient fuel or air, loose ignition connections, or a defective spark plug. A brief engine inspection will usually localize the trouble before the magneto is reached, and often prevents maladjustment of parts in good condition. Type FM-X magnetos are built in vented frames which should not be opened unless it is certain that the ignition spark is unsatisfactory. This condition may be determined by ignition spark tests can be easily made in the field.

TESTING THE IGNITION SPARK

With spark plugs properly adjusted and in good condition, the ignition spark should be strong enough to bridge a short gap in addition to the actual spark plug discharge. This may be determined by holding the end of each ignition cable 1/16 in. away from the spark plug terminal while the engine is running. The engine should not misfire when this is done. Ignition tests made while any part of the system is wet are useless.

TESTING THE MAGNETO SPARK

Tag the ignition cables to insure their proper replacement in the end cap cover, then remove all the ignition cables from their respective sockets and insert a short, stiff wire in one of the sockets. Bend this wire to within 1/8 in. of the engine block. Turn the engine over slowly two complete revolutions and watch carefully for the spark discharge which should occur once during the cycle at the instant the impulse coupling releases. Repeat this test with the wire in each of the other sockets. If a strong spark is observed with the wire in each socket, it is recommended that the magneto be eliminated as the source of difficulty and that the cables, terminals, and spark plugs be thoroughly cleaned and inspected. If no spark occurs, the ignition switch should be examined to make certain it has not accidentally become closed.

END CAP COVER REMOVAL

If no spark is obtained from one or more of the magneto terminals, remove the end cap cover, being careful not to damage the gasket. Remove the distributor rotor and clean the distributor compartment thoroughly, observing whether the air passages are open or clogged. IT IS IMPORTANT THAT THESE AIR PASSAGES BE KEPT FREE OF DIRT AND OTHER FOREIGN MATTER. If these passages are obstructed for any appreciable length of time, all metal parts within the end cap will become corroded. Examine the high-tension lead brush and replace it if noticeably worn or damaged. This brush should move freely in its holder and should be under slight spring pressure.

SERVICE OF BREAKER POINTS

Before examining the breaker points, it is first necessary to remove the end cap, which is sealed to the metal frame by a gasket joint. The breaker points should then be inspected for evidence of pitting or pyramiding. A tungsten file or fine stone may be used to resurface the points. Badly worn or pitted points should be replaced. If it is necessary to resurface or replace the breaker points, it will also be necessary to readjust them to their proper clearance of 0.015 in. at full separation. This adjustment is made in the following manner: Loosen slightly the two contact support locking screws, Fig. 1. Then move the contact support until the proper breaker point clearance is obtained. This is accomplished by means of a screwdriver inserted in the horizontal slot at the bottom of the contact support and pivoted between

PRINTED IN U.S.A.

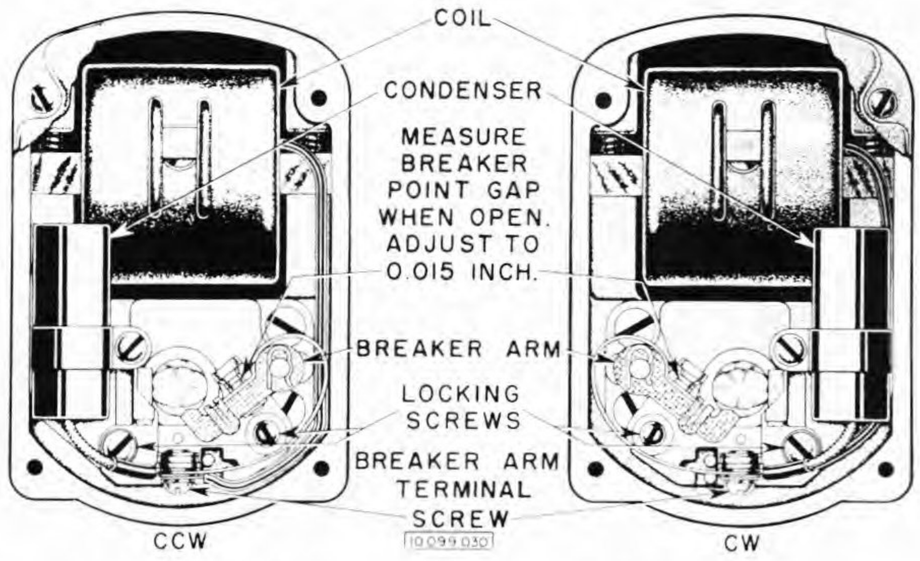

Fig. 1. End Views of Type FM-X Magnetos

the two small bosses on the bearing support. This causes a slight rotation of the contact support about the small boss on the bearing support just above the breaker arm terminal screw. Lock the assembly in place by tightening the locking screws, and take a final measurement of the breaker point gap after the locking screws are tightened.

FURTHER FIELD SERVICE NOT RECOMMENDED

The cam felt wick, if dry or hard, should be replaced by a new factory-impregnated wick. Other than this, Type FM-X magnetos do not require field lubrication and any attempt to oil or grease the bearings is inadvisable. The lubricant should be renewed only during a complete overhaul of the magneto by a Factory-Authorized Magneto Service Station. Coil and condenser replacements, while simple, are not recommended unless test equipment is available. Under no circumstances should any attempt be made to remove the magnetic rotor from the frame. It is locked in a special drive end thrust bearing and specific instructions must be carefully followed in releasing the shaft.

INTERNAL TIMING

If the distributor gear has been removed for any reason, the teeth must be properly meshed with those of the magnetic rotor gear upon reassembly. The gear teeth are marked to facilitate the internal timing of the magneto. However, the rotation of the magneto must first be determined; this can be quickly ascertained by referring to Fig. 2. Rotation is clockwise when the condenser is mounted to the right of the rotor and distributor gears and counterclockwise when mounted to the left. The breaker point assembly also changes its location, but this detail has been blocked out. For clockwise rotation, the single marked tooth of the pinion must mesh between the two marked teeth of the distributor gear designated by the letter C. For counterclockwise rotation, the marked tooth of the pinion must mesh between the two marked teeth of the distributor gear designated by the letter A.

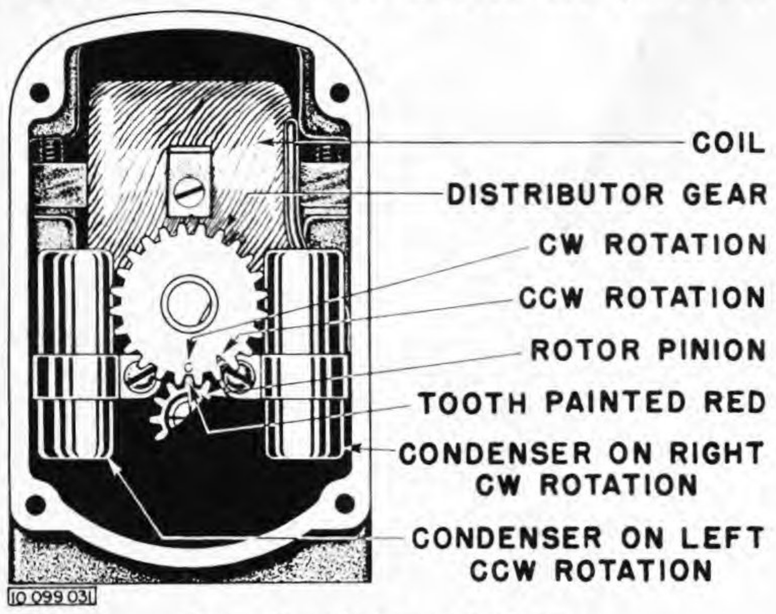

Fig. 2. Internal Timing

REASSEMBLY AND SEALING

Before replacing the end cap on the magneto frame, clean the contact surfaces between the cap and the frame. Then coat both contact surfaces completely with Fairbanks-Morse FMCO2 Gasket Varnish, place a new gasket in the joint, and mount the end cap on the frame, tightening the four screws securely.

TIMING MAGNETO TO ENGINE

Proper timing of the magneto to the engine produces an ignition spark in each cylinder at the exact instant that the fuel mixture should be ignited for best engine performance. This instant, which is accurately determined by the engine designers, is usually designated as a given number of degrees of angular travel of the crankshaft before the piston reaches inner dead center in the cylinder during the compression stroke. Impulse couplings furnished with modern magnetos automatically provide this spark-retarding feature while the engine is being started.



Fig. 3. Timing Diagram

The correct timing of the magneto to the engine can not be overemphasized. Two methods are given: (1), the advance spark position method and (2), the impulse coupling trip method. Whichever method is used, the breaker points must first be accurately adjusted to secure proper timing of the ignition spark.

(1) Advance Spark Position Method

A. Magneto

Set the magneto for advance spark position in the No. 1 cylinder. This is done by turning the rotor from the coupling end, in the direction OPPOSITE to that of normal operation until the distributor contact lines up exactly with the timing boss as indicated by the dotted lines in the timing diagram shown in Fig. 3. The magneto is now timed for advance spark position in the No. 1 cylinder and should be held exactly in this position until it is coupled to the engine.

B. Engine

Engine builders usually indicate by marks on the flywheel and flywheel housing the position of the engine for advance spark timing. Refer to the engine instruction book for details concerning the timing marks of your particular engine. Then rotate the crankshaft until the timing marks coincide, indicating that the No. 1 cylinder is in advance spark firing position. Be sure that the piston is on its compression stroke.

(2) Impulse Coupling Trip Method

A. Magneto

Remount the end cap cover on the end cap, following the same procedure used in sealing the joint between the end cap and the magneto frame. Next, set the magneto for spark discharge to the No. 1 terminal. This may be accomplished by the use of a short, stiff piece of wire placed in the No. 1 socket and bent to within 1/8 in. of the magneto frame. Then turn the magneto rotor from the impulse coupling end in its normal direction of rotation until a spark is observed between the wire and the frame. Hold the coupling in the position in which the trip occured.

B. Engine

Remove the spark plug, or otherwise determine inner dead center for the piston in the No. 1 cylinder. Then turn the engine over until this position is reached, being certain that the piston is just at the end of its compression stroke.

COUPLING MAGNETO TO ENGINE

Without disturbing the setting of either magneto or engine as determined by method (1) or (2) above, couple the magneto to the engine in the following manner:

(1) Flange Mounting Magnetos

Engage the drive lugs of the impulse coupling with the driving slots of the engine drive member. A slight movement of the engine flywheel may be necessary to secure accurate alignment. Tighten capscrews and nuts securely.

(2) Base Mounting Magnetos

If no change has been made in the position of the drive member, it is necessary only to engage the drive lugs of the impulse coupling with the drive slots of the float disc. Be sure that the shaft assembly is properly aligned before securing the base mounting screws.

ADJUSTABLE DRIVE MEMBERS

Most engines using base mounting magnetos are equipped with adjustable drive members. Ordinarily the position of the drive member is not altered when removing the magneto but when necessary, the drive collar nut L (See Fig. 4) can be loosened to permit relative movement of the engine drive shaft in collar K. The drive member slots J can then be turned for alignment with the impulse coupling lugs, after which the nut L should be tightened. The locking lugs M of the washer should be turned up around the nut to prevent its coming loose.

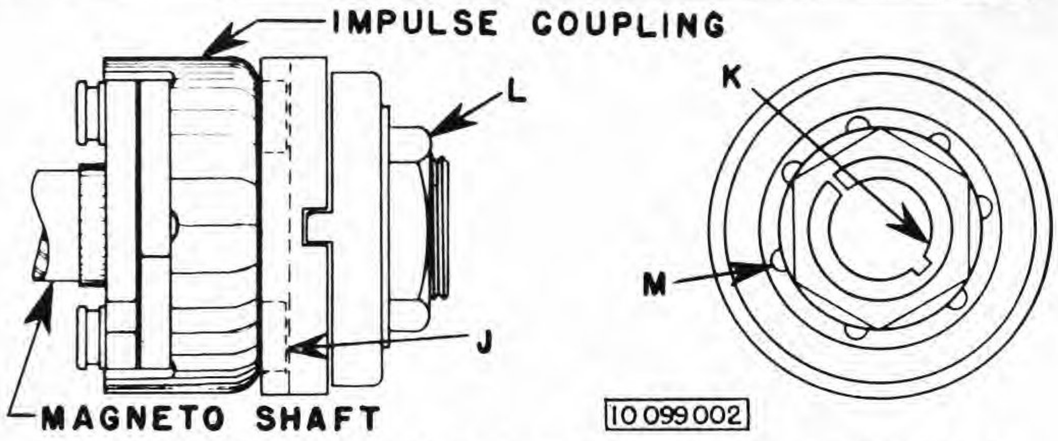

Fig. 4. Drive Member for Base Mounting Magnetos

IMPULSE COUPLING

The impulse coupling is used to facilitate starting of the engine by automatically retarding the ignition spark during the starting operation. At the same time it produces an intense, hot spark which would otherwise be impossible at very low engine speeds. By means of this device the rotor of the magneto is prevented from turning during the starting operation until the piston in the engine is approximately at inner dead center. At the instant the rotor is snapped forward at high speed, it produces an intense spark which is automatically retarded to prevent backfiring. The impulse feature disengages as soon as the engine develops speed, after which the coupling serves as a conventional drive member. A characteristic snap as the impulse coupling releases usually indicates that it is functioning satisfactorily. The coupling may be cleaned in kerosene and lubricated with a medium engine oil, but if functioning improperly it should be taken, together with the magneto, to an Authorized Fairbanks-Morse Magneto Service Station.

MAGNETO SERVICE FACILITIES

Authorized Fairbanks-Morse Magneto Service Stations, located throughout the United States and foreign countries, have been carefully selected by Fairbanks, Morse & Co. to insure highly efficient and complete repair service to owners of Fairbanks-Morse magnetos. These service stations, which are specially equipped for magneto repair and manned by highly-trained personnel, maintain close contact with the factory service and engineering departments. The station most convenient may be located by use of Bulletin FM18D, which is available upon request.

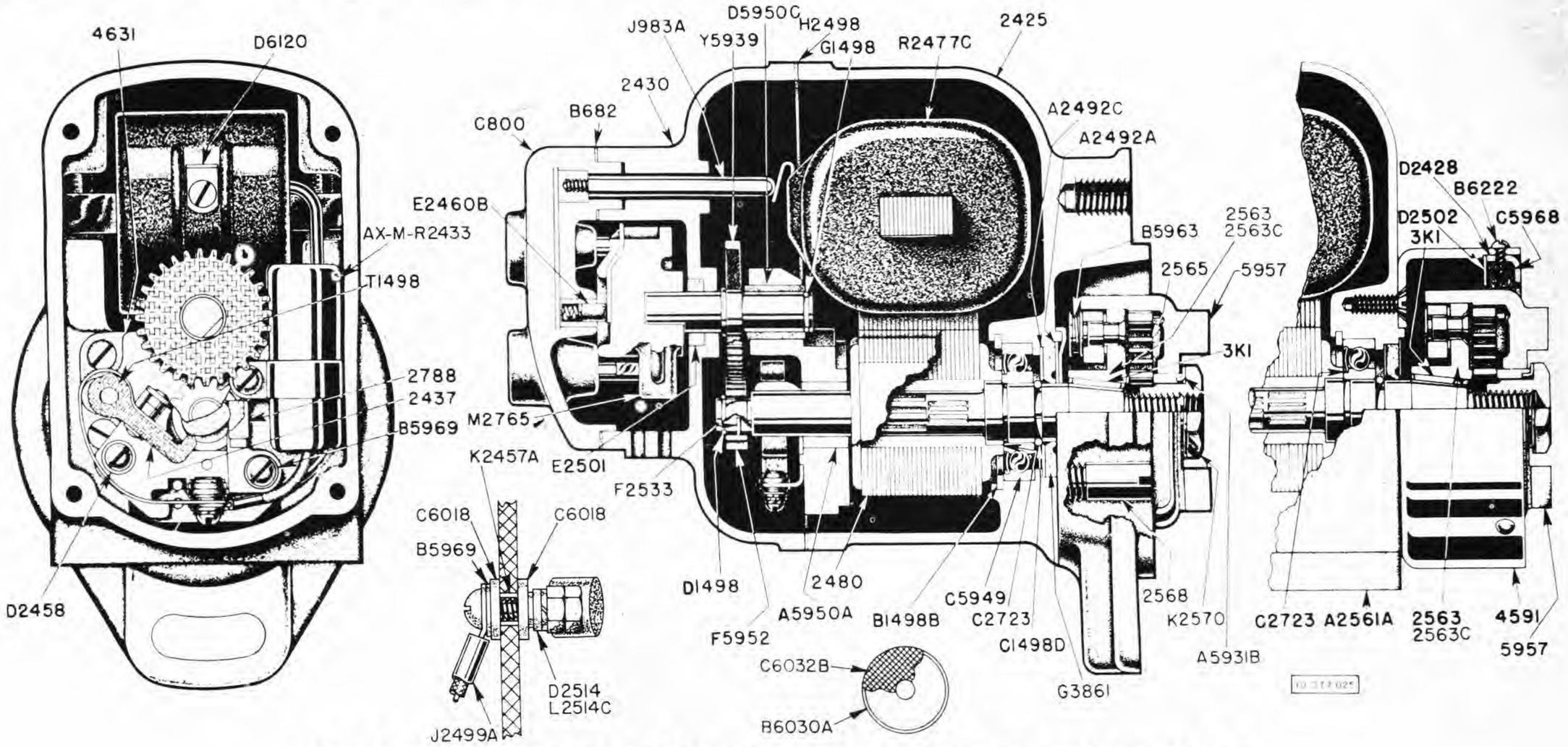

REPAIR CHART FOR TYPE-FM-X4 MAGNETOS

Order by Part No.	Name of Part	No. Used
B682	End Cap Cover Gasket	1
C800	End Cap Cover	1
8S9D	End Cap Cover Screw - #8-32x9/16"	2
J983A	High Tension Lead	1
D1498	Rotor Gear Snap Ring	1
G1498	Distributor Shaft Snap Ring	1
T1498	Fulcrum Pin Snap Ring	1
B1498B	Rotor Drive End Bearing Snap Ring	1
C1498D	Rotor Drive End Shaft Snap Ring	1
V2425	Frame - Base Mounting - FM-X4A	1
TZ2425	Frame - Flange Mounting - FM-X4B	1
D2428	Impulse Coupling Outer Shell Cupped Washer	1
VX2430	End Cap	1
10S14D	End Cap Screw - #10-24x$\frac{7}{8}$"	4
AX-M-R2433	Condenser	1
8S4U	Condenser Mounting Screw - #8-32x$\frac{1}{4}$"	1
W2437	Breaker Arm Support Bracket and Points - CW	1
X2437	Breaker Arm, Support Bracket and Points -CCW	1
6S6U	Breaker Arm Terminal Screw and Lockwasher - #6-32x$\frac{3}{8}$"	1
6S6U	Contact Support Locking Screw and Lockwasher- #6-32x$\frac{3}{8}$"	1
8S6U	Contact Support Locking Screw and Lockwasher- #8-32x$\frac{3}{8}$"	1
K2457A	Ground Switch Screw Bushing	1
D2458	Contact Support Locking Screw Plate Washer #6	1
E2460B	Center Brush and Spring	1
R2477C	Coil	1
25SS14A	Coil Bridge Setscrew $\frac{1}{4}$-20x$\frac{7}{8}$"	2
XY2480	Magnetic Rotor	1
A2492A	Rotor Drive End Seal Outer Washer	1
A2492C	Rotor Drive End Seal Inner Washer	1
H2498	End Cap to Frame Gasket	1
J2499A	Primary Terminal Wire Assembly	1
E2501	Distributor Shaft Seal	1
D2502	Impulse Coupling Outer Shell Flat Washer	1
D2514	Ground Switch Insulated Lever	1
8S12N	Ground Switch Screw - #8-32x$\frac{3}{4}$"	1
8LW5	Ground Switch Lockwasher	1
8LW6	Ground Switch Lockwasher - #1208	1
8N1	Ground Switch Nut	1

Order by Part No.	Name of Part	No. Used
L2514C	Ground Switch Complete	1
F2533	Rotor Gear Pin	1
A2561A	Demountable Base Plate	1
R2563	Coupling Hub Assembly - Base Mtg.	1
S2563	Coupling Hub Assembly - Flange Mtg.	1
S2563C	Impulse Coupling Complete - Flange Mtg.	1
U2563C	Impulse Coupling Complete - Base Mtg.	1
D2565	Impulse Coupling Drive Spring	1
A2568	Impulse Coupling Pawl Stop Pin	1
K2570	Impulse Coupling Nut	1
C2723	Rotor Drive End Bearing Shim	2
M2765	Distributor Rotor	1
G2788	Cam Wick and Holder - CW	1
H2788	Cam Wick and Holder - CCW	1
G3861	Rotor Drive End Seal	1
B4591	Coupling Outer Shell - Base Mtg.	1
25S6G	Coupling Outer Shell Screw - $\frac{1}{4}$-20x$\frac{3}{8}$"	4
X4631	Bearing Support - CW	1
Y4631	Bearing Support - CCW	1
8S6G	Bearing Support Screw - #8-32x$\frac{3}{8}$"	4
A5931B	Impulse Coupling Nut Lockwasher	1
Y5939	Distributor Gear	1
C5949	Rotor Drive End Bearing	1
A5950A	Rotor Cam End Bearing	1
D5950C	Distributor Bearing	1
F5952	Rotor Gear	1
N5957	Impulse Coupling Shell - Flange Mtg.	1
P5957	Impulse Coupling Shell - Base Mounting	1
B5963	Impulse Coupling Pawl Spring Flange Mtg.	1
C5968	Outer Shell Felt Washer - Base Mtg.	1
B5969	Contact Support Locking Screw Plate Washer #8	1
B5969	Ground Switch Plate Washer #8	1
C6018	Ground Switch Insulated Washer	2
B6030A	Vent Cover	2
6S5N	Vent Cover Screw - #6-32x5/16"	2
C6032B	Vent Screen	2
D6120	Coil Clip	1
6S3W	Coil Clip Screw - #6-32x3/16"	1
B6222	Coupling Housing Cupped Washer Screw - Base Mtg.	2
3K1	Key - Rotor Shaft to Impulse Coupling	1

FAIRBANKS, MORSE & CO.

MAGNETO DIVISION - BELOIT, WISCONSIN

362069-095706M-BLP
528056-095703M-BLP