Instructions No. 2914A
Supersedes Instructions No. 2914

FAIRBANKS-MORSE

TYPES FM-X2A AND FM-X2B MAGNETOS



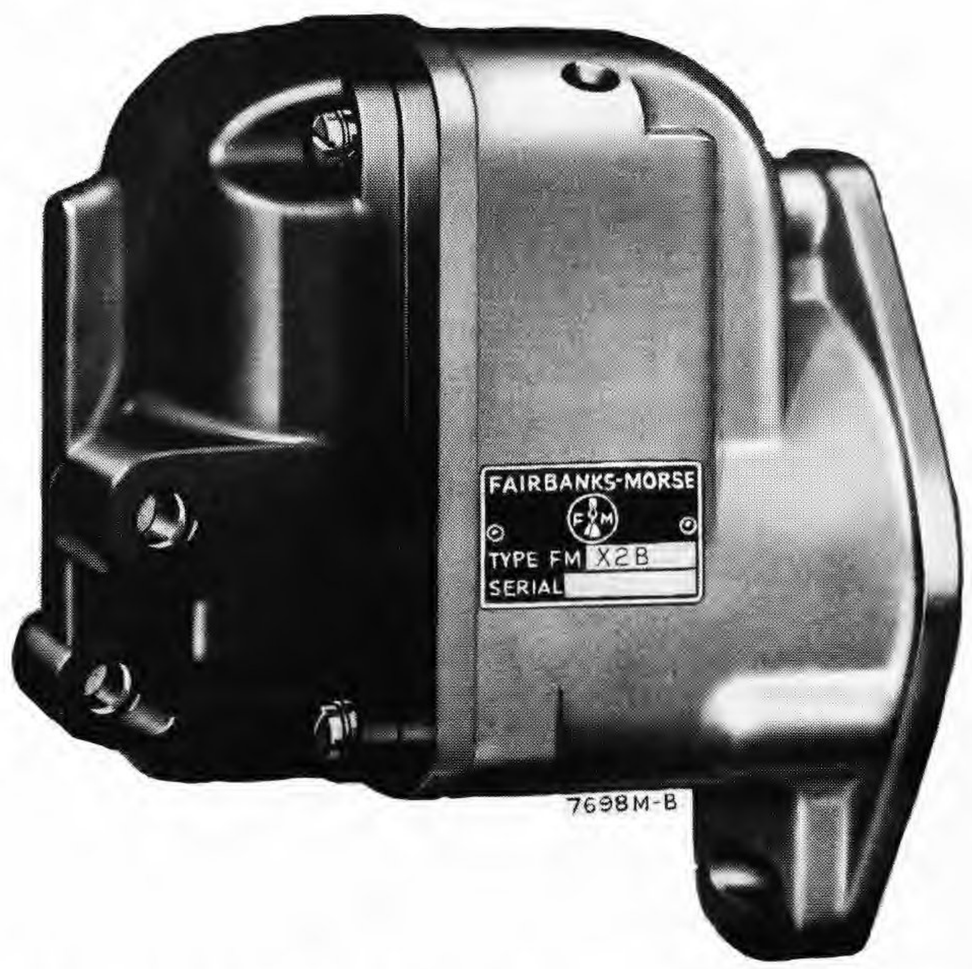

Field Service and Adjustment Information

GENERAL DESCRIPTION

Modern ignition systems are carefully designed to provide quick, easy starting and maximum dependability of operation without adjustment or service. Through advanced engineering, together with sturdy construction, Fairbanks-Morse magnetos have become field performance leaders. Especially compact in assembly, the powerful Alnico rotor assures an intensely hot spark even under the most difficult operating conditions. Field adjustments are rarely necessary and, although very simple, they should be made only in accordance with the following instructions.

SERVICE PROCEDURE

Improper functioning of the magneto is often believed to be the cause of engine difficulty arising from other sources, such as a flooded carburetor, insufficient fuel or air, loose ignition connections, or a defective spark plug. Since a brief engine inspection will usually locate the trouble before the magneto is reached, it often prevents maladjustment of parts in good condition. Type FM-X magnetos are built in sealed frames which should be opened only when it is certain that the ignition spark is unsatisfactory. This condition may be determined by ignition spark tests which are easily made in the field.

TESTING THE IGNITION SPARK

With properly adjusted spark plugs in good condition, the ignition spark should be strong enough to bridge a short gap in addition to the actual spark plug discharge. This may be determined while the engine is running by holding the end of the ignition cable not more than 1/16 in. away from the spark plug terminal, taking the usual precautions against electric shock. The engine should not misfire when this test is made. However, ignition tests made while any part of the system is wet are useless.

TESTING THE MAGNETO SPARK

Remove both the ignition cables from the end cap sockets and insert a short length of stiff wire in one of the sockets. Bend this wire to within 1/8 in. of the engine block. Turn the engine over slowly two complete revolutions and watch carefully for the spark discharge which should occur once during the cycle at the instant the impulse coupling releases. Repeat this test with the wire in the other socket. If a strong spark is observed with the wire in each socket, it is recommended that the magneto be eliminated as the source of difficulty and that the cables, terminals, and spark plugs be thoroughly inspected. If no spark occurs, the ignition switch should be examined to make certain it has not accidentally become closed.

ADJUSTMENT OF BREAKER POINTS

Remove the magneto end cap and inspect the carbon brushes, which should move freely in their holders. Worn brushes should always be replaced. Pull the distributor disc off the end of the rotor shaft and clean its surface with a cloth moistened in a Stoddard solvent. Examine the breaker points for evidence of pitting or pyramiding and resurface the points, if necessary, using a small tungsten file or fine stone. Badly worn or pitted points should be replaced. If it is necessary to resurface or replace the breaker points, it will also be necessary to adjust them to their proper clearance, which is 0.015 in. at full separation. This adjustment is made in the following manner: Loosen the contact support locking screws identified in Fig. 2, then move the contact support until the proper breaker point clearance is obtained. This is accomplished by means of a screwdriver inserted in the horizontal slot at the bottom of the contact support and pivoted between the two small bosses on the bearing support. Lock the assembly in place by tightening the

locking screws and take a final measurement of the breaker point gap after the locking screws are tightened.

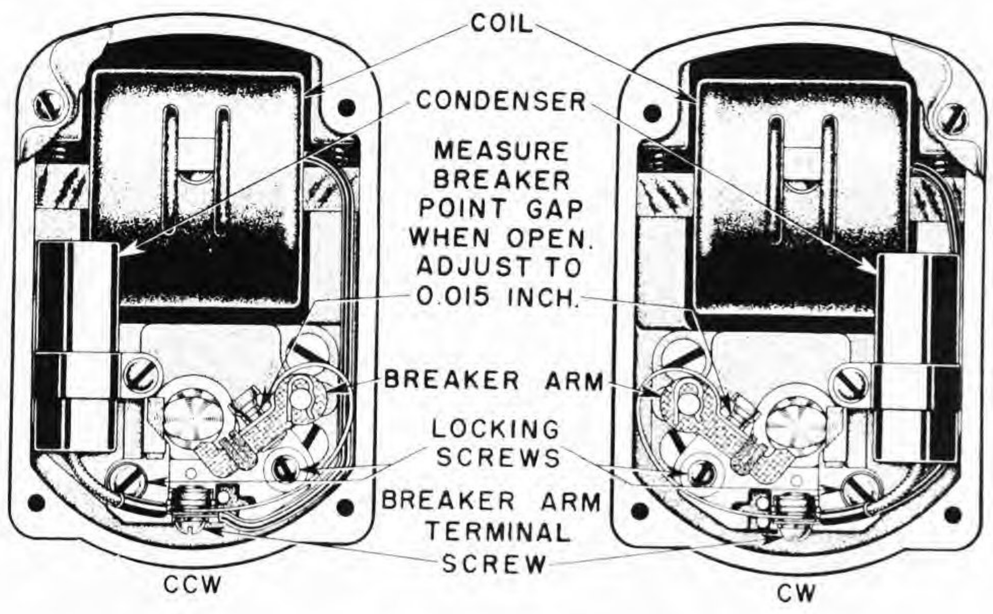

Fig. 1. End Views, Type FM-X2 Magnetos.

FURTHER FIELD SERVICE NOT RECOMMENDED

The cam felt wick, if dry or hard, should be replaced by a new factory-impregnated wick. Other than this, Type FM-X magnetos do not require field lubrication and any attempt to oil or grease the bearings is inadvisable. The lubricant should be renewed only during a complete overhaul of the magneto by a Factory-Authorized Magneto Service Station. Coil and condenser replacements, while simple, are not recommended unless test equipment is available. Under no circumstances should any attempt be made to remove the magnetic rotor from the frame. It is locked in a special drive end thrust bearing and specific instructions must be carefully followed in releasing the shaft.

SEALING MAGNETO

Type FM-X magnetos are sealed at the factory against the entry of dust and moisture through the use of a varnish-coated gasket joint. Opening the magneto for breaker point adjustment or other service necessitates resealing of the magneto upon reassembly. The surfaces between the magneto frame and the end cap should be cleaned thoroughly, a new gasket should be provided, and the joint should be sealed with a coating of FMCO2 Gasket Sealing Varnish.

TIMING MAGNETO TO ENGINE

If the magneto has been removed from the engine, replacement necessitates accurate retiming. Directions given by the engine manufacturer should be followed closely, with careful attention being given to flywheel and gear markings. The retiming operation consists of rotating the magneto to the position at which the impulse spark occurs, turning the engine over until the piston reaches top dead center, and coupling the magneto to the engine without disturbing the setting of either. Specifically, the procedure is as follows:

Magneto

Set the magneto for spark discharge to the No. 1 end cap terminal. This may be accomplished by use of a short, stiff wire placed in the No. 1 end cap socket and bent to within 1/8 in. of the magneto frame. Turn the magnetic rotor from the impulse coupling end in its normal direction of rotation until a spark is observed between the wire and the frame. Hold the coupling in the position in which the trip occurred.

Engine

Remove the spark plug, or otherwise determine top dead center for the piston in the No. 1 cylinder. Then turn the engine over until this position is reached, being certain that the piston is just at the end of its compression stroke.

COUPLING MAGNETO TO ENGINE

Without disturbing the setting of either magneto or engine as determined above, couple the magneto to the engine in the following manner:

(1) Flange Mounting Magnetos

Engage the drive lugs of the impulse coupling with the driving slots of the engine drive member. A slight movement of the engine flywheel may be necessary to secure accurate alignment. Tighten capscrews and nuts securely.

(2) Base Mounting Magnetos

If no change has been made in the position of the drive member, it is necessary only to engage the drive lugs of the impulse coupling with the drive slots of the float disc. Be sure that the shaft assembly is properly aligned before securing the base mounting screws.

ADJUSTABLE DRIVE MEMBERS

Most engines using base mounting magnetos are equipped with adjustable drive members. Ordinarily the position of the drive member is not altered when removing the magneto but when necessary, the drive collar nut L (See Fig. 2) can be loosened to permit relative movement of the engine drive shaft in collar K. The drive member slots J can then be turned for alignment with the impulse coupling lugs, after which the nut L should be tightened. The locking lugs M of the washer should be turned up around the nut to prevent its coming loose.

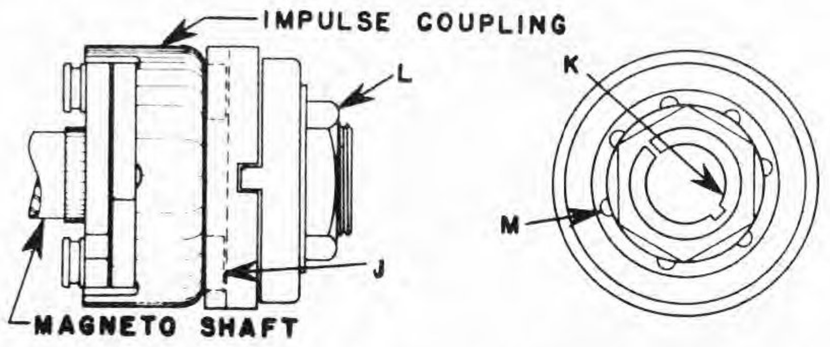

Fig. 2. Drive Member for Base Mounting Magnetos.

IMPULSE COUPLING

The impulse coupling is used to facilitate starting of the engine by automatically retarding the ignition spark during the starting operation and at the same time producing an intense, hot spark which would otherwise be impossible at very low engine speeds. By means of this device the rotor of the magneto is prevented from turning during the starting operation until the piston in the engine is approximately at top dead center, at which instant the rotor is snapped forward at very high speed, producing an intense spark which is automatically retarded to prevent backfiring. The impulse feature disengages as soon as the engine develops speed, after which the coupling serves as a conventional drive member. A characteristic snap as the impulse coupling releases usually indicates that it is functioning satisfactorily. The coupling may be cleaned in kerosene and lubricated with a medium engine oil, but if functioning improperly it should be taken, together with the magneto, to an Authorized Fairbanks-Morse Magneto Service Station.

MAGNETO SERVICE FACILITIES

Authorized Fairbanks-Morse Magneto Service Stations, located throughout the United States and foreign countries, have been carefully selected by Fairbanks, Morse & Co. to insure highly efficient and complete repair service to owners of Fairbanks-Morse magnetos. These service stations, which are specially equipped for

magneto repair and manned by highly-trained personnel, maintain close contact with the factory service and engineering departments. The station most convenient may be located by use of Bulletin FM18D, which is available upon request.

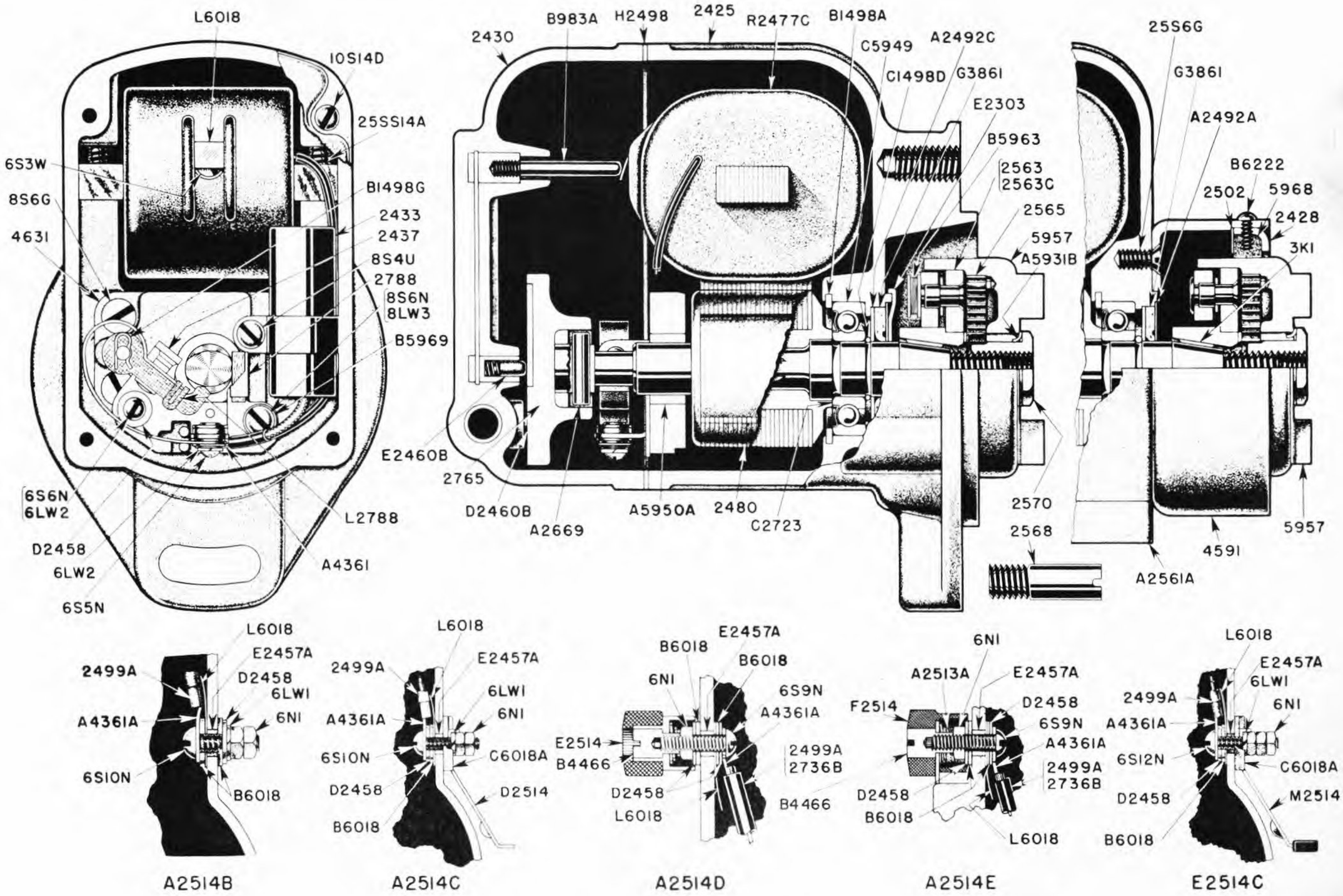

REPAIR CHART, TYPES FM-X2A AND FM-X2B MAGNETOS

Order by Part No.	Name of Part. Unless otherwise specified, part is for both base and flange, CW and CCW magnetos.	No. Used
B983A	Distributor High Tension Lead Rod	1
B1498A	Rotor Drive End Bearing Snap Ring	1
B1498G	Fulcrum Pin Snap Ring	1
C1498D	Rotor Drive End Shaft Snap Ring	1
E2303	Oil Slinger Baffle Disc	1
AX2425	Frame (Standard Integral Flange)	1
AY2425	Frame (FM-X2A39B)	1
BZ2425	Frame (FM-X2A7)	1
EY2425	Frame (FM-X2B36B)	1
FX2425	Frame (FM-X2B6G, FM-X2B14, FM-X2B14A)	1
QX2425	Frame (FM-X2A13,FM-X2A20,FM-X2A37,FM-X2A50)	1
UX2425	Frame (FM-X2B7)	1
V2425	Frame (35 mm. Base) (Use 2561 or 2561A Adapter Plate)	1
XY2425	Frame (FM-X2A80)	1
D2428	Coupling Shell Cupped Washer (Base, UA)	1
E2428	Coupling Shell Cupped Washer (Base, UC)	1
BX2430	End Cap (Standard)	1
LX2430	End Cap (FM-X2A7, FM-X2A80, FM-X2B7)	1
10S14D	End Cap Screw (#10-24x7/8")	4
R2433	Condenser	1
S2433	Condenser (FM-X2A7)	1
8S4U	Condenser Mounting Screw (#8-32x1/4")	1
W2437	Breaker Arm, Support Bracket & Points (CW)	1
X2437	Breaker Arm, Support Bracket & Points (CCW)	1
6S5N	Breaker Arm Terminal Screw. (#6-32x5/16")	1
6LW2	Breaker Arm Terminal Screw Lockwasher (#6)	1
6S6N	Contact Support Locking Screw (#6-32x3/8")	1
6LW2	Contact Support Locking Screw Lockwasher(#6)	1
8S6N	Contact Support Locking Screw (#8-32x3/8")	1
8LW3	Contact Support Locking Screw Lockwasher(#8)	1
E2457A	Primary Ground Screw Bushing	1
D2458	Contact Support Locking Screw Washer	1
D2458	Primary Ground Screw Washer	1
D2460B	Distributor Brush and Spring Assembly	2
E2460B	Center Brush and Spring Assembly	1
R2477C	Molded Coil (R2477C inc. D6120, 6S3W)	1
25SS14A	Coil Bridge Setscrew (1/4-20x7/8")	2
AW2480	Magnetic Rotor (FM-X2B6G,FM-X2B13,X2B13A)	1
BW2480	Magnetic Rotor (FM-X2B7)	1
JY2480	Magnetic Rotor (FM-X2A7)	1
WY2480	Magnetic Rotor (Standard)	1
XZ2480	Magnetic Rotor (FM-X2B36B)	1
A2492A	Rotor Drive End Seal Outer Washer	1
A2492C	Rotor Drive End Seal Inner Washer	1
H2498	End Cap to Frame Gasket	1
B2499A	Primary Terminal Wire Assembly (7") (B2499A inc. E2736B, A4361, A4361A)	1
D2499A	Primary Terminal Wire Assembly (5") (D2499A inc. G2736B, A4361, A4361A)	1
D2502	Coupling Outer Shell Flat Washer (UA)	1

Order by Part No.	Name of Part. Unless otherwise specified, part is for both base and flange, CW and CCW magnetos.	No. Used
E2502	Coupling Outer Shell Flat Washer (UC) . . .	1
A2513A	Primary Ground Switch Spring	1
A2514B	Primary Ground Terminal Group . . . . . (A2514B inc. E2457A,D2458,2499A,B6018(2) L6018,6S10N,6N1(2),6LW1)	1
A2514C	Primary Ground Switch Assembly . . . . . (A2514C inc. E2457A,D2458,2499A,D2514, B6018,C6018A,L6018,6S10N,6N1(2),6LW1)	1
A2514D	Primary Ground Switch Assembly . . . . . (A2514D inc. E2457A, D2458 (2), 2499A, E2514, B4466, B6018 (2), 6S9N, 6N1) . . .	1
A2514E	Primary Ground Switch Assembly . . . . . (A2514E inc. E2457A, D2458 (2), 2499A, A2513A,F2514,B4466,B6018(2),L6018, 6S9N,6N1)	1
D2514	Primary Ground Switch Lever	1
E2514	Primary Ground Switch Push Button	1
E2514C	Insulated Lever Ground Switch Assembly . . (E2514C inc. E2457A, D2458, 2499A, M2514, B6018, C6018A, 6S12N, 6N1(3), 6LW1)	1
F2514	Primary Ground Switch Knob	1
M2514	Primary Ground Switch Insulated Lever . . .	1
6S9N	Primary Ground Screw . . . . (#6-32x9/16")	1
6S10N	Primary Ground Screw . . . . . .(#6-32x$\frac{5}{8}$")	1
6S12N	Primary Ground Screw . . . . . .(#6-32x$\frac{3}{4}$")	1
6N1	Primary Ground Nut . . . . . (#6-32)	1
6LW1	Primary Ground Lockwasher . . . . . .(#6)	1
A2561	Demountable Flange Plate (Standard S.A.E.)	1
25S8G	Demountable Flange Plate Screw. . ($\frac{1}{4}$-20x$\frac{1}{2}$")	4
A2561A	Demountable Base Plate (Use with V2425) . .	1
25S12G	Demountable Base Plate Screw . . ($\frac{1}{4}$-20x$\frac{3}{4}$")	2
BW2563C	Impulse Coupling Assembly (UB40, CW). . . . (BW2563C inc. CZ2563, E2565, Y5957)	1
CZ2563	Impulse Coupling Hub (UB40, CW) . . . . . (CZ2563 inc. B5963)	1
HX2563	Impulse Coupling Hub (UDL, CCW)	1
HY2563C	Impulse Coupling Assembly (UD, CW) . . . . (HY2563C inc. MX2563, D2565, HX5957)	1
HZ2563	Impulse Coupling Hub (UB39, CW)	1
JX2563C	Impulse Coupling Assembly (UBL6, CCW) . . . (JX2563C inc. R2563‡,D2565, V5957)	1
MX2563	Impulse Coupling Hub (UD, CW)	1
MX2563C	Impulse Coupling Assembly (UC8, CW) . . . . (MX2563C inc. ZX2563, D2565, Z5957)	1
NX2563C	Impulse Coupling Assembly (UB8, CW) . . . . (NX2563C inc. Q2563*, D2565, AX5957)	1
Q2563*	Impulse Coupling Hub (UA & UB, CW)	1
Q2563C*	Impulse Coupling Assembly (UB, CW) . . . . (Q2563C inc. Q2563*, D2565, N5957)	1
R2563‡	Impulse Coupling Hub (UAL, UBL, CCW) . . .	1
R2563C‡	Impulse Coupling Assembly (UBL, CCW) . . . (R2563C inc. R2563‡, D2565, M5957)	1
T2563C*	Impulse Coupling Assembly (UA, CW) . . . . (T2563C inc. Q2563*, D2565, Q5957)	1
TW2563C	Impulse Coupling Assembly (UB39, CW) . . . (TW2563C inc. HZ2563, D2565, DY5957)	1
U2563C‡	Impulse Coupling Assembly (UAL, CCW) . . . (U2563C inc. R2563‡, D2565, P5957)	1
VX2563C	Impulse Coupling Assembly (UBL17, CCW) . . (VX2563C inc. XY2563, D2565, GX5957)	1
W2563	Impulse Coupling Hub (UCL, CCW)	1
W2563C	Impulse Coupling Assembly (UCL, CCW) . . . (W2563C inc. W2563, D2565, R5957)	1
XY2563	Impulse Coupling Hub (UBL17, CCW)	1
ZX2563	Impulse Coupling Hub (UC8, CW)	1
ZX2563C	Impulse Coupling Assembly (UDL, CCW) . . . (ZX2563C inc. HX2563, D2565, HX5957)	1

Order by Part No.	Name of Part. Unless otherwise specified, part is for both base and flange, CW and CCW magnetos.	No. Used
D2565	Impulse Coupling Drive Spring	1
E2565	Impulse Coupling Drive Spring (UB40) . . .	1
A2568	Impulse Coupling Pawl Stop Pin (UB, CW) . .	1
B2568	Impulse Coupling Pawl Stop Pin (UBL, CCW) .	1
F2568	Impulse Coupling Pawl Stop Pin (UDL, CCW) .	1
S2568	Impulse Coupling Pawl Stop Pin (UD, CW) . .	1
K2570	Impulse Coupling Nut (Standard)	1
M2570	Impulse Coupling Nut (UB39, UB40, UC8). . .	1
N2570	Impulse Coupling Nut (FM-X2B14, FM-X2B14A)	1
P2570	Impulse Coupling Nut (FM-X2B13, FM-X2B13A)	1
37SS8A	Coupling Nut Setscrew for UB8 . . ($\frac{3}{8}$-16x$\frac{1}{2}$")	1
B2572	Impulse Coupling Bushing(FM-X2B13,FM-X2B13A)	1
F2572	Impulse Coupling Bushing (Use with UB39) .	1
A2669	Distributor Disc Pin	1
C2723	Rotor Drive End Bearing Shim (as needed) .	2
E2736B	Primary Terminal Wire Tube (7")	1
G2736B	Primary Terminal Wire Tube (5")	1
N2765	Distributor Disc (CCW)	1
P2765	Distributor Disc (CW)	1
Q2765	Distributor Disc (FM-X2A7)	1
R2765	Distributor Disc (FM-X2A80, FM-X2B7) . . .	1
G2788	Cam Wick and Holder Assembly (CW)	1
H2788	Cam Wick and Holder Assembly (CCW)	1
L2788	Breaker Arm Felt Wick	1
A2837	Demountable Flange Gasket	1
G3861	Rotor Drive End Seal	1
A4361	Lead Wire Terminal for No. 8 Screw	3
A4361A	Lead Wire Terminal for No. 6 Screw	1
B4466	Primary Ground Switch Nut	1
B4591	Coupling Outer Shell Assembly (CCW) . . .	1
C4591	Coupling Outer Shell Assembly (CW)	1
25S6G	Outer Shell to Frame Screw . . . ($\frac{1}{4}$-20x$\frac{3}{8}$")	4
V4631	Bearing Support Assembly (CW)	1
W4631	Bearing Support Assembly (CCW)	1
8S6G	Bearing Support Screw . . . . . .(#8-32x$\frac{3}{8}$")	4
A5931A	Impulse Coupling Nut Lockwire (UB39) . . .	1
A5931B	Impulse Coupling Nut Lockwasher	1
A5931E	Flange Plate Setscrew (CW)	1
B5931E	Flange Plate Setscrew (CCW)	1
C5949	Magnetic Rotor Drive End Bearing	1
A5950A	Magnetic Rotor Bearing (Opp. Drive End) . .	1
AX5957	Impulse Coupling Shell (UB8, CW)	1
DY5957	Impulse Coupling Shell (UB39, CW)	1
GX5957	Impulse Coupling Shell (UBL17, CCW)	1
HX5957	Impulse Coupling Shell (UD, CW & CCW) . . .	1
M5957	Impulse Coupling Shell (UBL, CCW)	1
N5957	Impulse Coupling Shell (UB, CW)	1
P5957	Impulse Coupling Shell (UAL, CCW)	1
Q5957	Impulse Coupling Shell (UA, CW)	1
R5957	Impulse Coupling Shell (UCL, CCW)	1
V5957	Impulse Coupling Shell (UBL6, CCW)	1
Y5957	Impulse Coupling Shell (UB40, CW)	1
Z5957	Impulse Coupling Shell (UC8, CW)	1
B5963	Impulse Coupling Pawl Spring (UB40, CW) . .	2
C5968	Coupling Outer Shell Felt Washer (UA) . . .	1
D5968	Coupling Outer Shell Felt Washer (UC) . . .	1
B5969	Contact Support Locking Screw Washer . . .	1
B6018	Primary Ground Screw Insulating Washer . .	1
C6018A	Primary Ground Screw Insulating Block . . .	1
L6018	Primary Ground Switch Terminal Insulator .	1
A6030A	Vent Screen Washer (FM-X2A7, FM-X2B7) . . .	1
A6032B	Vent Screen (FM-X2A7, FM-X2B7)	1
D6120	Coil Clip	1
6S3W	Coil Clip Screw . . . . . (#6-32x3/16")	1
B6222	Impulse Coupling Outer Shell Screw (Base) .	2
3K1	Key (Rotor to Impulse Coupling)	1

* When a two-keyway CW coupling or hub providing lag angles of 20° and 35° is ordered, hub AY2563 is furnished.

‡ When a three-keyway CCW coupling or hub providing lag angles of 20°, 35°, and 35° for John Deere applications is ordered, hub BY2563 is furnished.

FAIRBANKS, MORSE & CO.

Manufacturers

Executive Offices
Chicago, Illinois

Magneto Sales & Factory
Beloit, Wisconsin

325468-075408M-BDN
563366-075404M-BDN

Printed in U.S.A.