FAIRBANKS-MORSE

MAGNETO DIVISION
BELOIT, WISCONSIN

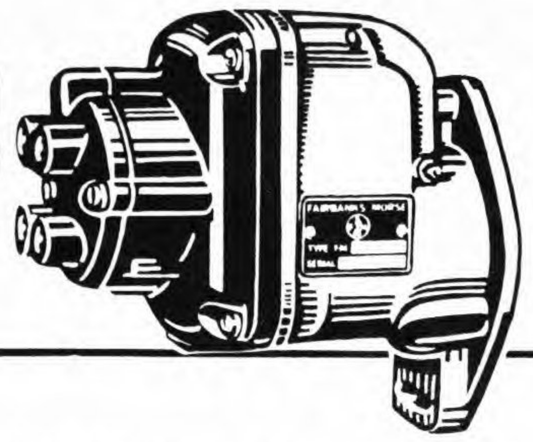

Instructions 2921 B
Supplements Instruction 2921
April 1957

TYPE FM-X ONE CYLINDER MAGNETOS FOR WISCONSIN MOTOR CORPORATION



BASE MOUNTING

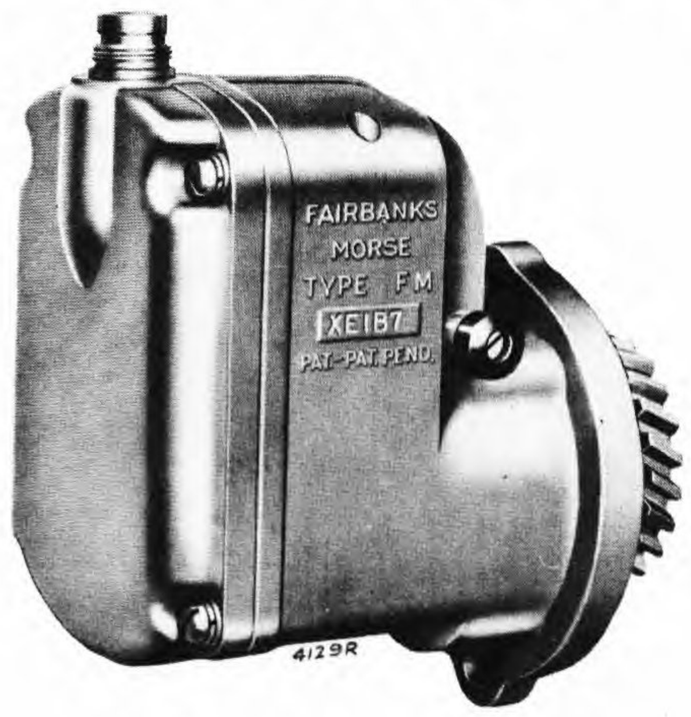

FLANGE MOUNTING

Service and Adjustment Information

GENERAL DESCRIPTION

The one cylinder magnetos whose parts are listed in this instruction sheet were built specifically for application on Wisconsin single cylinder engines. The variations of the Type FM-X1A7 magneto are all of a special base mounting design with a shaft height of 35 mm, and the modifications of the Type FM-X1B7 unit have a special mounting flange. The magnetic and electrical circuits of all units are identical, with a two pole magnetic rotor and a single lobe cam producing one ignition spark per revolution. Rotation of the base-mounting types is counterclockwise when viewed from the drive end, while the flange-mounting magnetos rotate clockwise. All are fitted with dependable, single pawl impulse couplings which facilitate starting by providing an intensified and retarded ignition spark at low engine speeds.

SERVICE PROCEDURE

Improper functioning of the magneto is often believed to be the cause of much engine trouble arising from other sources, such as a flooded carburetor, an obstructed air intake, defective ignition connections, or corroded spark plug points. Since a brief engine inspection will often locate the trouble before the magneto is reached, it prevents maladjustment of magneto parts in good condition. It is suggested that the magneto be opened only when it is certain that the ignition spark produced is unsatisfactory. This condition may be determined by simple tests which are easily made in the field.

TESTING THE IGNITION SPARK

With a properly adjusted spark plug in good condition, the ignition spark should be strong enough to bridge a short gap in addition to the actual spark plug discharge. This may be determined by holding the end of the ignition cable not more than 1/16 in. away from the spark plug terminal. The engine should not misfire when this is done. Ignition tests made while any part of the system is wet are useless.

TESTING THE MAGNETO SPARK

Remove the ignition cable from the end cap socket and insert a short piece of stiff wire. Bend this wire to within 1/8 in. of the engine block. Turn the engine over slowly and watch carefully for the spark which should occur at the instant the impulse coupling releases. If a strong spark is observed, it is recommended that the magneto be eliminated as the source of the difficulty and that the cable, terminals, and

Printed in U.S.A.

spark plug be thoroughly inspected.

SERVICE OF BREAKER POINTS

Remove the magneto end cap and compare the arrangement of parts with the drawings of Fig. 1. The breaker points should then be inspected for evidence of pitting or pyramiding. A small tungsten file or fine stone may be used to resurface the points, except in the case of badly worn or pitted points, which should be replaced. Removal of worn points may be accomplished by removing the fulcrum pin snap ring, the breaker arm terminal screw, and the contact support locking screws, all of which are identified in Fig. 1. If it is necessary to resurface or replace the breaker points, it will also be necessary to adjust them to their proper clearance, which is 0.015 in. at full separation. This adjustment is made in the following manner: Loosen the contact support locking screws, then move the contact support until the proper breaker point clearance is obtained. This is accomplished by means of a screwdriver inserted in the horizontal slot at the bottom of the contact support and pivoted between the two small bosses on the bearing support. Lock the assembly in place by tightening the locking screws and make a final measurement of the breaker point gap after the locking screws are tightened.

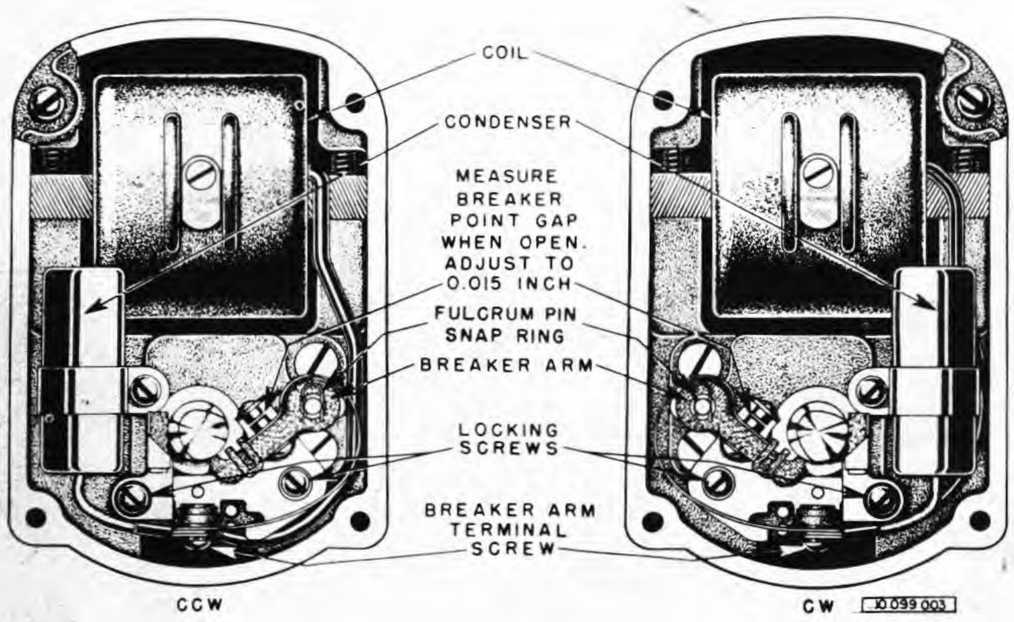

Fig. 1. End Views of Type FM-X Magnetos

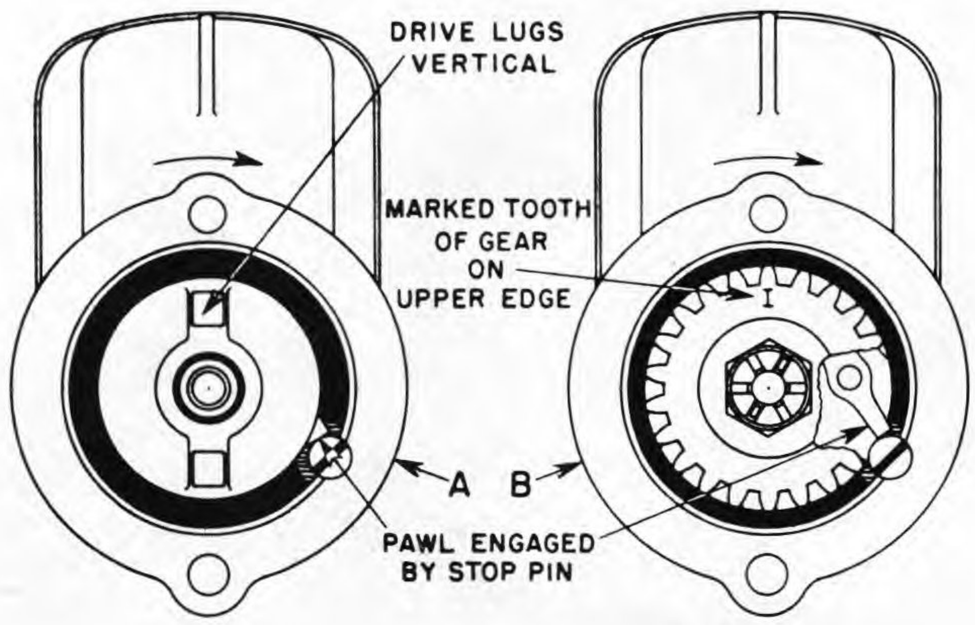

Fig. 2. Mounting Drive Gear

SEALING MAGNETO

Type FM-X magnetos are sealed at the factory against the entry of dust and moisture through the use of a varnish-coated gasket joint. Opening the magneto for breaker point adjustment or other service necessitates resealing of the magneto upon reassembly. The surfaces between the magneto frame and the end cap should be cleaned thoroughly, a new gasket should be provided, and the joint should be sealed with a coating of FMCO2 Gasket Sealing Varnish.

SPECIAL DRIVE GEAR

Flange mounting magnetos for Wisconsin motors require a drive gear fitted to the impulse coupling by means of an extended rotor shaft. To engage the slotted drive gear correctly with the drive lugs of the coupling, the magneto rotor should be turned by hand until the coupling pawl engages the stop pin in the flange, the coupling drive lugs then being in the position shown by A of Fig. 2. The drive gear should then be fitted to the coupling so that the marked tooth is on the upper edge of the gear as shown in B of Fig. 2.

RADIO-SHIELDED MAGNETOS

Applications which require complete radio shielding of the ignition system are equipped with a Type FM-XE or a Type FM-XDE magneto. These magnetos are similar to standard models except that the plastic end cap is replaced by an all-metal cover through which the high-tension lead is conducted by means of a special insulated socket. Detailed information covering these units can be obtained upon inquiry.

GROUND SWITCHES

Magnetos for Wisconsin Motor Corporation one cylinder engines are furnished with either a push button or an insulated lever switch. Both designs function to ground the primary circuit of the magneto when the engine is to be stopped. The switch must be kept closed until the engine is completely at a standstill.

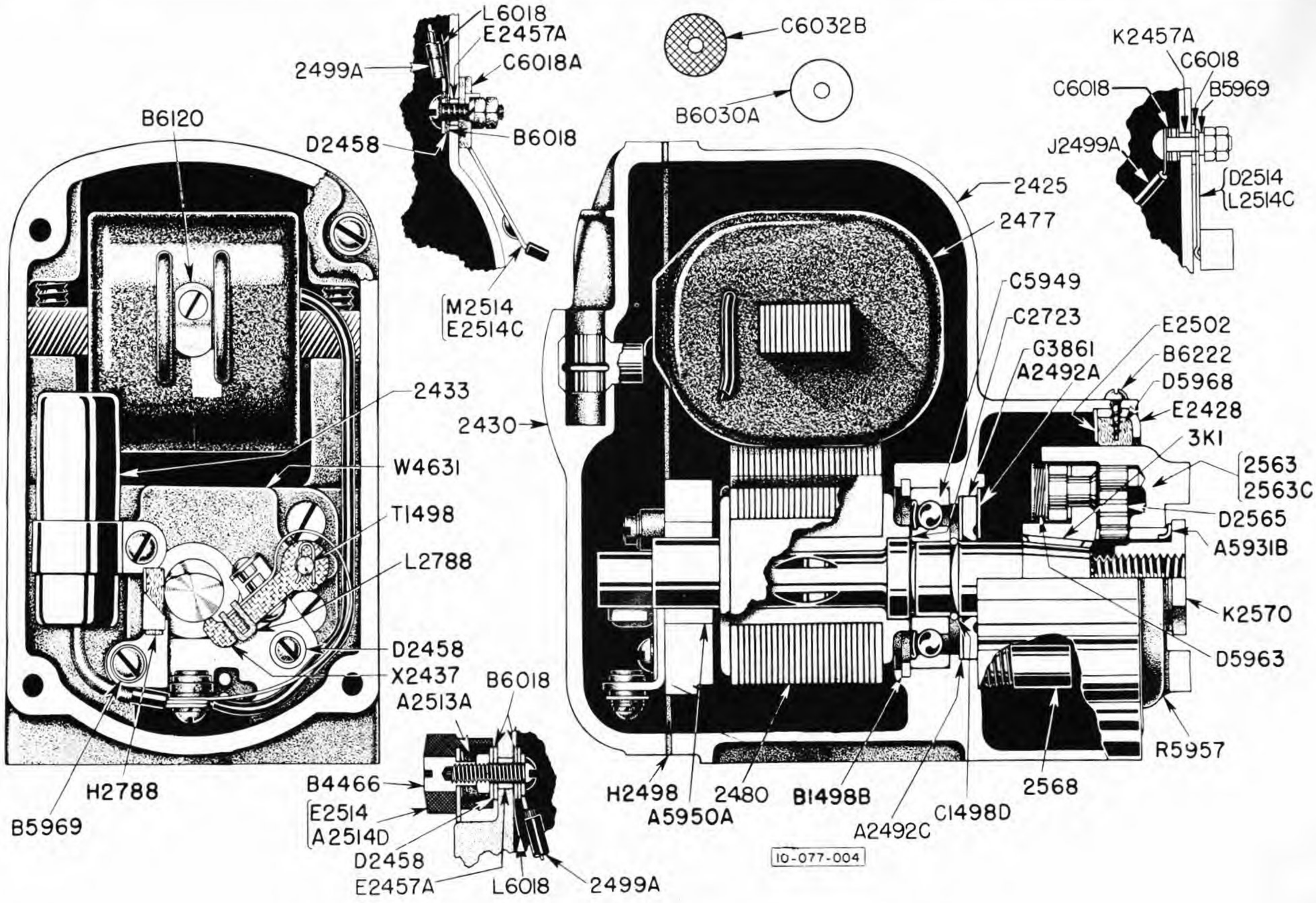

Repair Chart for Standard Base Mounting Magnetos

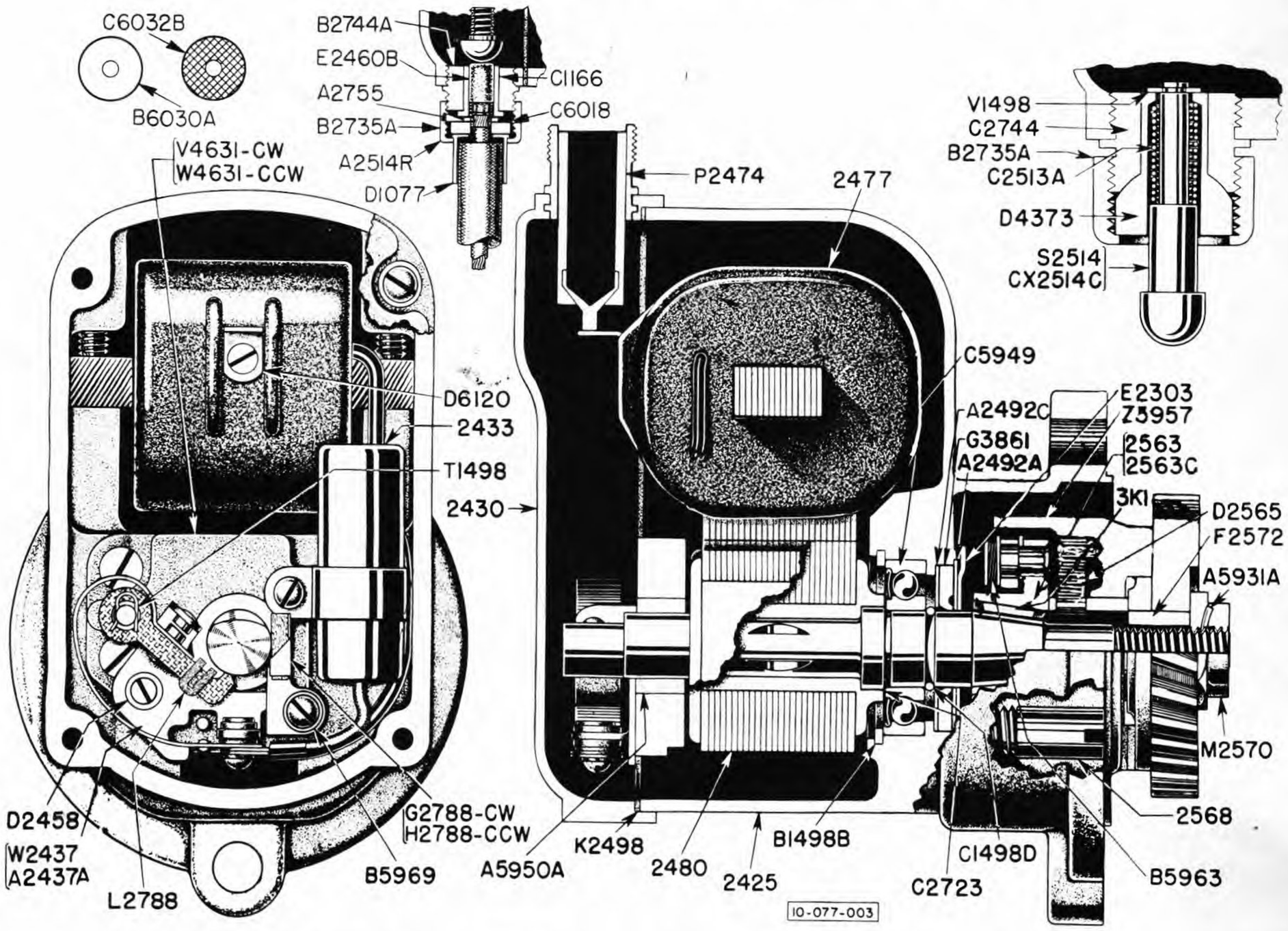

Repair Chart for Radio Shielded Flange Mounting Magnetos

Order by Part No.	Name of Part	Number Used										
		FM-X1A7	FM-X1A7E	FM-X1A7F	FM-XE1A7	FM-XE1A7F	FM-X1B7E	FM-XE1B7	FM-XE1B7F	FM-XD1B7	FM-XD1B7D	FM-XDE1B7P
D1077	Ground Switch Ferrule	-	-	-	-	-	-	-	1	-	-	-
C1166	Ground Switch Insulating Bushing	-	-	-	-	-	-	-	1	-	-	-
T1498	Fulcrum Pin Snap Ring	1	1	1	1	1	1	1	1	1	1	1
V1498	Ground Switch Snap Ring	-	-	-	-	1	-	-	-	-	-	1
B1498B	Rotor Drive End Bearing Snap Ring	1	1	1	1	1	1	1	1	1	1	1
C1498D	Rotor Drive End Shaft Snap Ring	1	1	1	1	1	1	1	1	1	1	1
E2303	Oil Slinger Baffle Disc	-	-	-	-	-	1	1	1	1	1	1
RX2425	Frame	-	-	-	-	-	1	1	1	1	1	1
ZX2425	Frame	1	1	1	1	1	-	-	-	-	-	-
E2428	Impulse Coupling Housing Cupped Washer	1	1	1	1	1	-	-	-	-	-	-
AX2430	End Cap	1	1	1	-	-	1	-	-	1	1	-
A2430A	End Cap	-	-	-	1	-	-	1	-	-	-	-
J2430A	End Cap	-	-	-	-	1	-	-	1	-	-	1
10S10D	End Cap Screw - #10-24x$\frac{5}{8}$"	4	4	4	4	4	4	4	4	4	4	4
AX-M-R2433	Condenser - Bracket in "R" Position	1	1	1	1	1	1	1	1	1	1	-
S-Y-X2433	Condenser - Bracket in "S" Position	-	-	-	-	-	-	-	-	-	-	1
8S4U	Condenser Mounting Screw - #8-32x$\frac{1}{4}$"	1	1	1	1	1	1	1	1	1	1	1
W2437	Breaker Arm, Support Bracket and Points - CW	-	-	-	-	-	1	1	1	-	-	-
X2437	Breaker Arm, Support Bracket and Points - CCW	1	1	1	1	1*	-	-	-	-	-	-
A2437A	Breaker Arm, Support Bracket and Points - CW	-	-	-	-	-	-	-	-	1	1	1*
6S6U	Breaker Arm Terminal Screw and Lockwasher #6-32x$\frac{3}{8}$"	1	1	1	1	1	1	1	1	1	1	1
6S6U	Contact Support Locking Screw and Lockwasher #6-32x$\frac{3}{8}$"	1	1	1	1	1	1	1	1	1	1	1
8S6U	Contact Support Locking Screw and Lockwasher #8-32x$\frac{3}{8}$"	1	1	1	1	1	1	1	1	1	1	1
E2457A	Ground Switch Insulating Bushing	-	-	-	1	-	-	1	-	-	-	-
K2457A	Ground Switch Insulating Bushing	1	1	1	-	-	1	-	-	1	1	-
D2458	Ground Switch Plate Washer	-	-	-	1	-	-	2	-	-	-	-
D2458	Contact Support Locking Screw Plate Washer	1	1	1	1	1	1	1	1	1	1	1
E2460B	Center Brush and Spring	-	-	-	-	-	-	-	1	-	-	-
P2474	High Tension Cable Outlet	-	-	-	1	1*	-	1	1	-	-	1*
S2477C	Coil	-	-	-	-	-	-	-	-	1	1	1
T2477C	Coil	1	1	1	1	1	1	1	1	-	-	-
25SS14A	Coil Bridge Setscrew -$\frac{1}{4}$-20x$\frac{7}{8}$"	2	2	2	2	2	2	2	2	2	2	2
DW2480	Magnetic Rotor	-	-	-	-	-	-	-	-	1	1	1
JZ2480	Magnetic Rotor	1	1	1	1	1	-	-	-	-	-	-
KZ2480	Magnetic Rotor	-	-	-	-	-	1	1	1	-	-	-
A2492A	Rotor Bearing Seal Outer Washer	1	1	1	1	1	1	1	1	1	1	1
A2492C	Rotor Bearing Seal Inner Washer	1	1	1	1	1	1	1	1	1	1	1
H2498	End Cap to Frame Gasket	1	1	1	-	-	1	-	-	1	1	-
K2498	End Cap to Frame Gasket	-	-	-	1	1	-	1	1	-	-	1
D2499A	Ground Switch Terminal Wire	-	-	-	1	-	-	1	-	-	-	-
J2499A	Ground Switch Terminal Wire	1	1	1	-	-	1	-	-	1	1	-
E2502	Coupling Outer Shell Flat Washer	1	1	1	1	1	-	-	-	-	-	-
A2513A	Ground Switch Button Spring	-	-	-	-	-	-	1	-	-	-	-
C2513A	Ground Switch Button Spring	-	-	-	-	1	-	-	-	-	-	1
D2514	Ground Switch Insulated Lever	1	1	1	-	-	1	-	-	1	1	-
8S12N	Ground Switch Screw - #8-32x$\frac{3}{4}$"	1	1	1	-	-	1	-	-	1	1	-
8LW6	Ground Switch Lockwasher - Shakeproof	1	1	1	-	-	1	-	-	1	1	-
8LW5	Ground Switch Lockwasher	1	1	1	-	-	1	-	-	1	1	-
8N1	Ground Switch Nut	2	2	2	-	-	2	-	-	2	2	-
E2514	Ground Switch Push Button	-	-	-	-	-	-	1	-	-	-	-
M2514	Ground Switch Insulated Lever	-	-	-	1	-	-	-	-	-	-	-
S2514	Ground Switch Button	-	-	-	-	1	-	-	-	-	-	1
A2514D	Push Button Ground Switch Complete	-	-	-	-	-	-	1	-	-	-	-
E2514C	Insulated Lever Ground Switch	-	-	-	1	-	-	-	-	-	-	-
L2514C	Primary Ground Switch	1	1	1	-	-	1	-	-	1	1	-
A2514R	Primary Ground Switch	-	-	-	-	-	-	-	1	-	-	-
CX2514C	Primary Ground Switch	-	-	-	-	1	-	-	-	-	-	1
6S9N	Ground Switch Screw - #6-32x9/16"	-	-	-	-	-	-	1	-	-	-	-
6S12N	Ground Switch Screw - #6-32x$\frac{3}{4}$"	-	-	-	1	-	-	-	-	-	-	-
6LW2	Ground Switch Screw Lockwasher	-	-	-	1	-	-	-	-	-	-	-
6N1	Ground Switch Nut	-	-	-	3	-	-	1	-	-	-	-
W2563	Coupling Hub Assembly	1	-	1	-	-	-	-	-	-	-	-
LX2563	Coupling Hub Assembly	-	-	-	-	-	-	1	1	-	1	1
YX2563	Coupling Hub Assembly	-	1	-	1	1	-	-	-	-	-	-
ZX2563	Coupling Hub Assembly	-	-	-	-	-	1	-	-	1	-	-
W2563C	Impulse Coupling Complete - Type UCL	1	-	1	-	-	-	-	-	-	-	-
MX2563C	Impulse Coupling Complete - Type UC-8	-	-	-	-	-	1	-	-	1	-	-
EY2563C	Impulse Coupling Complete - Type UC-8	-	-	-	-	-	-	1	1	-	1	1
WY2563C	Impulse Coupling Complete - Type UCL-1	-	1	-	1	1	-	-	-	-	-	-
D2565	Impulse Coupling Drive Spring	1	1	1	1	1	1	1	1	1	1	1
F2568	Impulse Coupling Pawl Stop Pin	1	1	1	1	1	-	-	-	-	-	-
S2568	Impulse Coupling Pawl Stop Pin	-	-	-	-	-	1	1	1	1	1	1
K2570	Impulse Coupling Nut	1	1	1	1	1	-	-	-	-	-	-
M2570	Impulse Coupling Nut	-	-	-	-	-	1	1	1	1	1	1

Order by Part No.	Name of Part	Number Used										
		FM-X1A7	FM-X1A7E	FM-X1A7F	FM-XE1A7	FM-XE1A7F	FM-X1B7E	FM-XE1B7	FM-XE1B7F	FM-XD1B7	FM-XD1B7D	FM-XDE1B7P
F2572	Impulse Coupling Bushing	-	-	-	-	-	1	1	1	1	1	1
C2723	Rotor Thrust Bearing Shim - as needed	2	2	2	2	2	2	2	2	2	2	2
B2735A	Cable Outlet Nut	-	-	-	-	1	-	-	1	-	-	1
C2744	Ground Switch Bushing	-	-	-	-	1	-	-	1	-	-	1
B2744A	Ground Cable Outlet Bushing	-	-	-	-	-	-	-	1	-	-	-
A2755	Ground Switch Wire Terminal	-	-	-	-	-	-	-	1	-	-	-
G2788	Cam Wick and Holder	-	-	-	-	-	1	1	1	1	1	1
H2788	Cam Wick and Holder	1	1	1	1	1	-	-	-	-	-	-
L2788	Breaker Arm Wick	1	1	1	1	1	1	1	1	1	1	1
G3861	Rotor Shaft Seal	1	1	1	1	1	1	1	1	1	1	1
D4373	Ground Switch Bushing	-	-	-	-	1	-	-	-	-	-	1
B4466	Ground Screw End Nut	-	-	-	-	-	-	1	-	-	-	-
V4631	Bearing Support - CW	-	-	-	-	-	1	1	1	1	1	1
W4631	Bearing Support - CCW	1	1	1	1	1	-	-	-	-	-	-
8S6G	Bearing Support Screw - #8-32x$\frac{3}{8}$"	4	4	4	4	4	4	4	4	4	4	4
A5931A	Impulse Coupling Nut Lockwire	-	-	-	-	-	1	1	1	1	1	1
A5931B	Impulse Coupling Nut Lockwire	1	1	1	1	1	-	-	-	-	-	-
C5949	Rotor Drive End Bearing	1	1	1	1	1	1	1	1	1	1	1
A5950A	Rotor Cam End Bearing	1	1	1	1	1	1	1	1	1	1	1
R5957	Impulse Coupling Shell	1	1	1	1	1	-	-	-	-	-	-
Z5957	Impulse Coupling Shell	-	-	-	-	-	1	1	1	1	1	1
B5963	Impulse Coupling Pawl Spring	-	-	-	-	-	-	1	-	-	1	1
D5963	Impulse Coupling Pawl Spring	-	1	-	1	1	-	-	-	-	-	-
D5968	Impulse Coupling Outer Shell Felt Washer	1	1	1	1	1	-	-	-	-	-	-
B5969	Contact Support Locking Screw Plate Washer	1	1	1	1	1	1	1	1	1	1	1
B5969	Ground Switch Plate Washer	1	1	1	-	-	1	-	-	1	1	-
B6018	Ground Switch Insulating Washer	-	-	-	1	-	-	2	-	-	-	-
C6018	Ground Switch Insulating Washer	2	2	2	-	-	2	-	2	2	2	-
L6018	Ground Switch Terminal Insulator	-	-	-	1	-	-	1	-	-	-	-
C6018A	Ground Switch Screw Insulating Block	-	-	-	1	-	-	-	-	-	-	-
B6030A	Vent Cover	2	2	2	2	2	2	2	2	2	2	2
6S5N	Vent Cover Screw - #6-32x5/16"	2	2	2	2	2	2	2	2	2	2	2
C6032B	Vent Screen	2	2	2	2	2	2	2	2	2	2	2
B6120	Coil Clip	1	1	1	-	-	1	-	-	1	1	-
D6120	Coil Clip	-	-	-	1	1	-	1	1	-	-	1
6S3W	Coil Clip Screw - #6-32x3/6"	1	1	1	1	1	1	1	1	1	1	1
B6222	Coupling Housing Cupped Washer Screw	2	2	2	2	2	-	-	-	-	-	-
3K1	Key - Rotor Shaft to Impulse Coupling	1	1	1	1	1	1	1	1	1	1	1

* Fungus treated part.

FAIRBANKS, MORSE & CO.

MAGNETO DIVISION - BELOIT, WISCONSIN

358205-045706M-BLP