Instructions No. 2959A
Supersedes Instructions No. 2959

FAIRBANKS-MORSE

TYPES FM-E6A AND FM-E6B RADIO-SHIELDED MAGNETOS





Field Service and Adjustment Information

APPLICATION

Type FM-E6B magnetos are built for continuous heavy-duty operation on six-cylinder engines requiring complete radio-shielding of the ignition system. Radio-shielding of the magneto is accomplished by enclosing the entire unit in a grounded metal frame equipped with special venting ports. Threaded bushings are provided for connection to the flexible, woven metal sheaths which are used to shield the high tension lead cables. For applications in which a higher degree of shielding is required, magnetos with feed-through condensers are available.

SERVICE PROCEDURE

Improper functioning of the magneto is often believed to be the cause of engine difficulty arising from other sources, such as a flooded carburetor, insufficient fuel or air, loose ignition connections, or a defective spark plug. Since a brief engine inspection will often locate the trouble before the engine is reached, it prevents maladjustment of parts in good condition. It is suggested that the magneto be opened only when it is certain that the ignition spark produced is unsatisfactory. This condition may be determined by simple tests which are easily made in the field.

TESTING THE IGNITION SPARK

With properly adjusted spark plugs in good condition, the ignition spark should be strong enough to bridge a short gap in addition to the actual spark plug discharge. The test is made with the engine running. Remove the upper half of the spark plug radio shields and hold each ignition cable terminal in turn not more than 1/16 in. away from the spark plug terminal, taking the usual precautions against electric shock. The engine should not misfire when this test is made. However, tests made while any part of the system is wet are useless.

TESTING THE MAGNETO SPARK

Tag the high-tension cables to insure their proper replacement. Remove the cable outlet nuts to remove the metal cable sheaths, and pull the cables out of the distributor block sockets. In the case of Types FM-E6B16F and FM-E6B97 magnetos, which incorporate an end cap cover, it will be necessary to remove this cover and to loosen the six cable outlet knobs which hold the wires in place in the distributor block. Remove 1/2 in. of the insulation from the end of a short length of stiff, rubber-covered wire and insert in place of the high-tension cable. Be sure this wire reaches the bottom of the socket and contacts the brass insert. Bend the other end of the wire to within 1/8 in. of the engine or magneto frame and watch closely for a spark between the wire and the engine (or magneto) frame every sixth time the impulse coupling releases when the engine is turned over slowly. Test each of the sockets in turn; if a strong spark is observed with the wire in each socket, it is recommended that the magneto be eliminated as the source of difficulty and that the cables, terminals, and spark plugs be thoroughly inspected. If no spark occurs, the ignition switch should be examined to make certain it has not accidentally become closed.

SERVICE OF BREAKER POINTS

If no spark is obtained from one or more of the magneto terminals, the end cap assembly should be removed from the magneto frame by removing the four end cap screws. Then examine the carbon brush in the center of the distributor block and replace it if noticeably worn or damaged. This brush should move freely in its holder and should be under slight spring pressure. Next, inspect the breaker points for evidence of pitting or pyramiding. A small tungsten file or fine stone may be used to resurface the points except in the case of badly worn or pitted points, which should be replaced. If it is neces-

sary to resurface or replace the breaker points, it will also be necessary to adjust them to their proper clearance, which is 0.015 in. at full separation. This adjustment is made in the following manner: Loosen the contact support locking screws, identified in Fig. 1. Then move the contact support until the proper breaker point clearance is obtained. This is accomplished by means of a screwdriver inserted in the horizontal slot at the bottom of the contact support and pivoted between the two small bosses on the bearing support. Lock the assembly in place by tightening the locking screws and take a final measurement of the breaker point gap after the locking screws are tightened. Oil film can be removed from the breaker points by using a small brush and a small quantity of petroleum solvent.

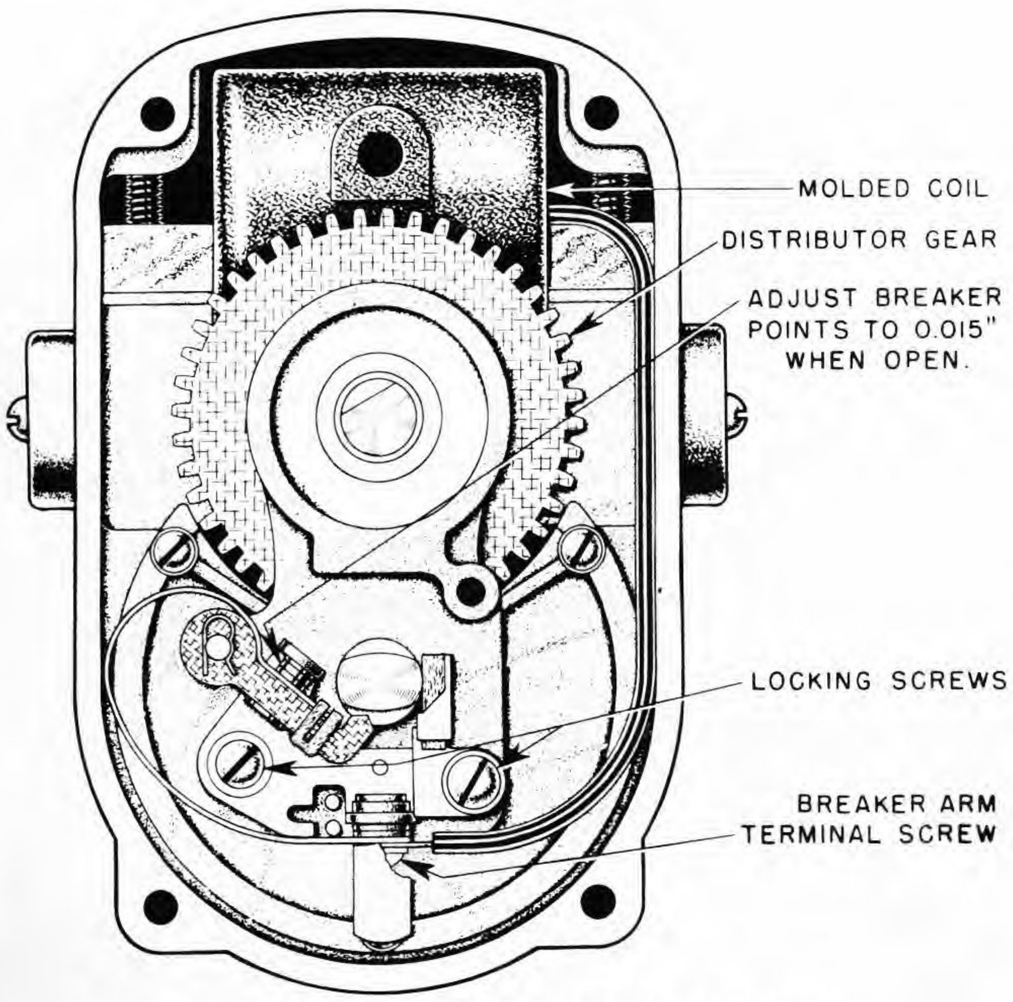

Fig. 1. End View of Type FM-E Magneto.

FURTHER FIELD SERVICE NOT RECOMMENDED

The cam wick, if dry or hard, should be replaced by a new factory-impregnated wick. This is done by substituting a new cam wick and holder assembly for the old assembly. Other than this, Type FM-E magnetos do not require field lubrication and any attempt to oil or grease the bearings is inadvisable. The lubricants should be renewed only during a complete overhaul of the magneto by a Factory-Authorized Magneto Service Station.

TIMING MAGNETO TO ENGINE

If the magneto has been removed from the engine, replacement necessitates accurate retiming. Retiming the magneto to the engine may be accomplished by either (1) The advance spark position method or (2) The impulse coupling trip method. Whichever method is used, the breaker points must first be accurately adjusted to secure proper timing of the ignition spark.

(1) Advance Spark Position Method

A. Magneto

Set the magneto for spark advance position in the No. 1 cylinder. This is done in the following manner: With the distributor rotor on its shaft, rotate the magnetic rotor in the direction opposite to that of normal operation until the distributor contact reaches its firing position for No. 1 cylinder. In Types FM-E6A14A, C, and D, and FM-E6B44 magnetos this position is diagonally upward, 30° to the right of vertical. See Fig. 2.

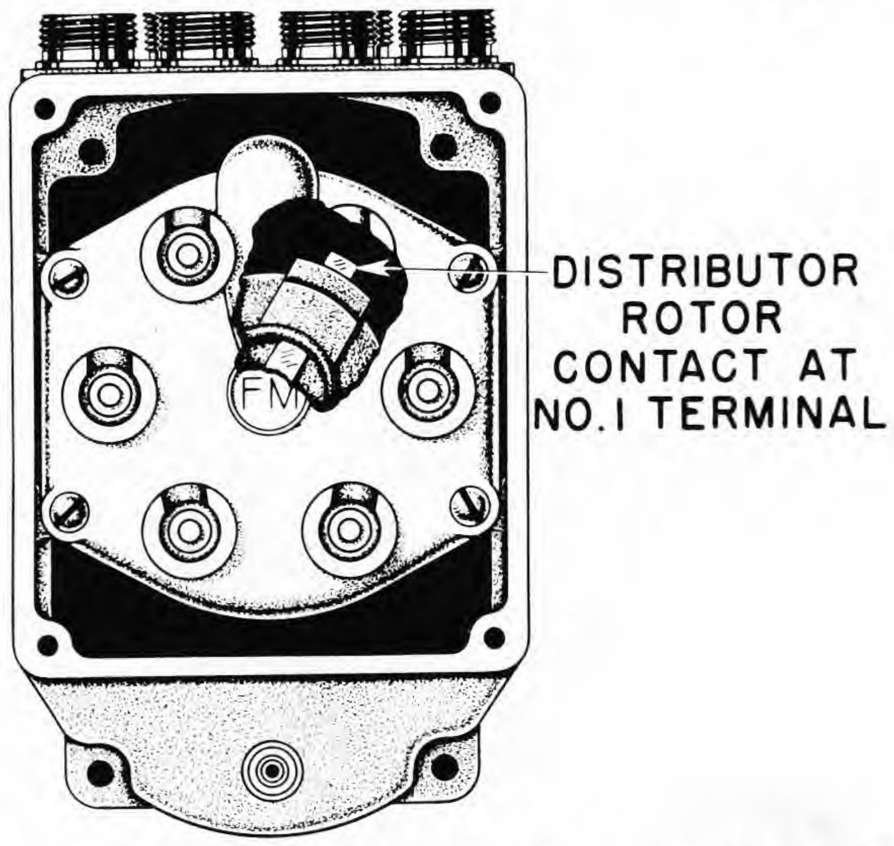

Fig. 2. Distributor Contact Firing Position for No. 1 Cylinder in Types FM-E6A14A, C, and D, and FM-E6B44.

B. Engine

Engine builders usually indicate by marks on the flywheel and flywheel housing the position of the engine for advance spark timing. Refer to the engine instruction book for details concerning the timing marks of your particular engine. Then rotate the crankshaft until the timing marks coincide, indicating that the piston in the No. 1 cylinder is in advance spark firing position. Be sure that the piston is on its compression stroke.

(2) Impulse Coupling Trip Method

A. Magneto

Remount the end cap cover on the end cap and set the magneto for spark discharge to the No. 1 terminal. This may be accomplished by use of a short, stiff length of wire placed in the No. 1 socket and bent to within 1/8 in. of the magneto frame. Then turn the magneto slowly in its normal direction of rotation until a spark is observed between the wire and the frame. Hold the coupling in the position in which it tripped.

B. Engine

Remove the spark plug, or otherwise determine top dead center for the piston in the No. 1 cylinder. Then turn the engine over until this position is reached, being certain that the piston is just at the end of its compression stroke.

COUPLING MAGNETO TO ENGINE

Without disturbing the setting of either magneto or engine as determined by method (1) or (2) above, couple the magneto to the engine in the following manner:

(1) Flange Mounting Magnetos

Engage the drive lugs of the impulse coupling with the driving slots of the engine member. A slight movement of the engine flywheel may be necessary to secure accurate alignment. Tighten capscrews and nuts securely.

(2) Base Mounting Magnetos

If no change has been made in the position of the drive member, it is necessary only to engage the drive lugs of the impulse coupling with the drive slots of the float disc. Be sure that the shaft assembly is accurately aligned before securing the base mounting screws.

ADJUSTABLE DRIVE MEMBERS

Most engines using base mounting magnetos are

equipped with adjustable drive members. Ordinarily the position of the drive member is not altered when removing the magneto but when necessary, the drive collar nut L (See Fig. 3) can be loosened to permit relative movement of the engine drive shaft. The drive member slots J can then be turned for alignment with the impulse coupling lugs, after which the nut L should be tightened. The locking lugs M of the washer should be turned up around the nut to prevent loosening of the nut.

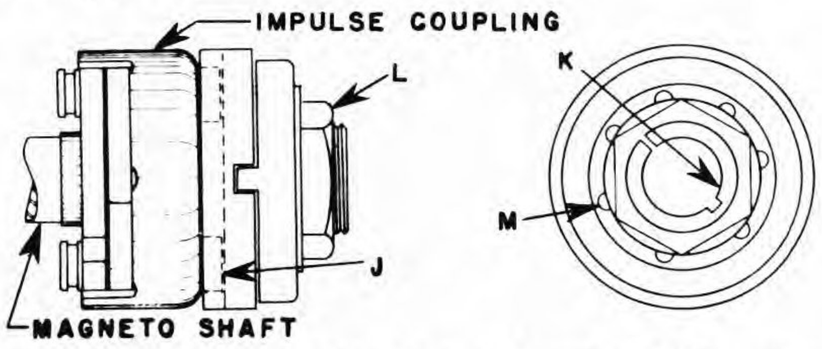

Fig. 3. Drive Member for Base Mounting Magnetos.

MAGNETO SERVICE FACILITIES

Authorized Fairbanks-Morse Magneto Service Stations, located throughout the United States and foreign countries, have been carefully selected by Fairbanks, Morse & Co. to insure highly efficient and complete repair service to owners of Fairbanks-Morse magnetos. These service stations, which are specially equipped for magneto repair and manned by highly-trained personnel, maintain close contact with the factory service and engineering departments. The station most convenient may be located by use of Bulletin FM18D, which is available upon request.

Genuine Fairbanks-Morse magneto replacement parts, which may be obtained from all Authorized Service Stations, should always be insisted upon for repairs. The use of spurious parts usually proves less satisfactory and economical, in addition to voiding the manufacturer's guaranty.

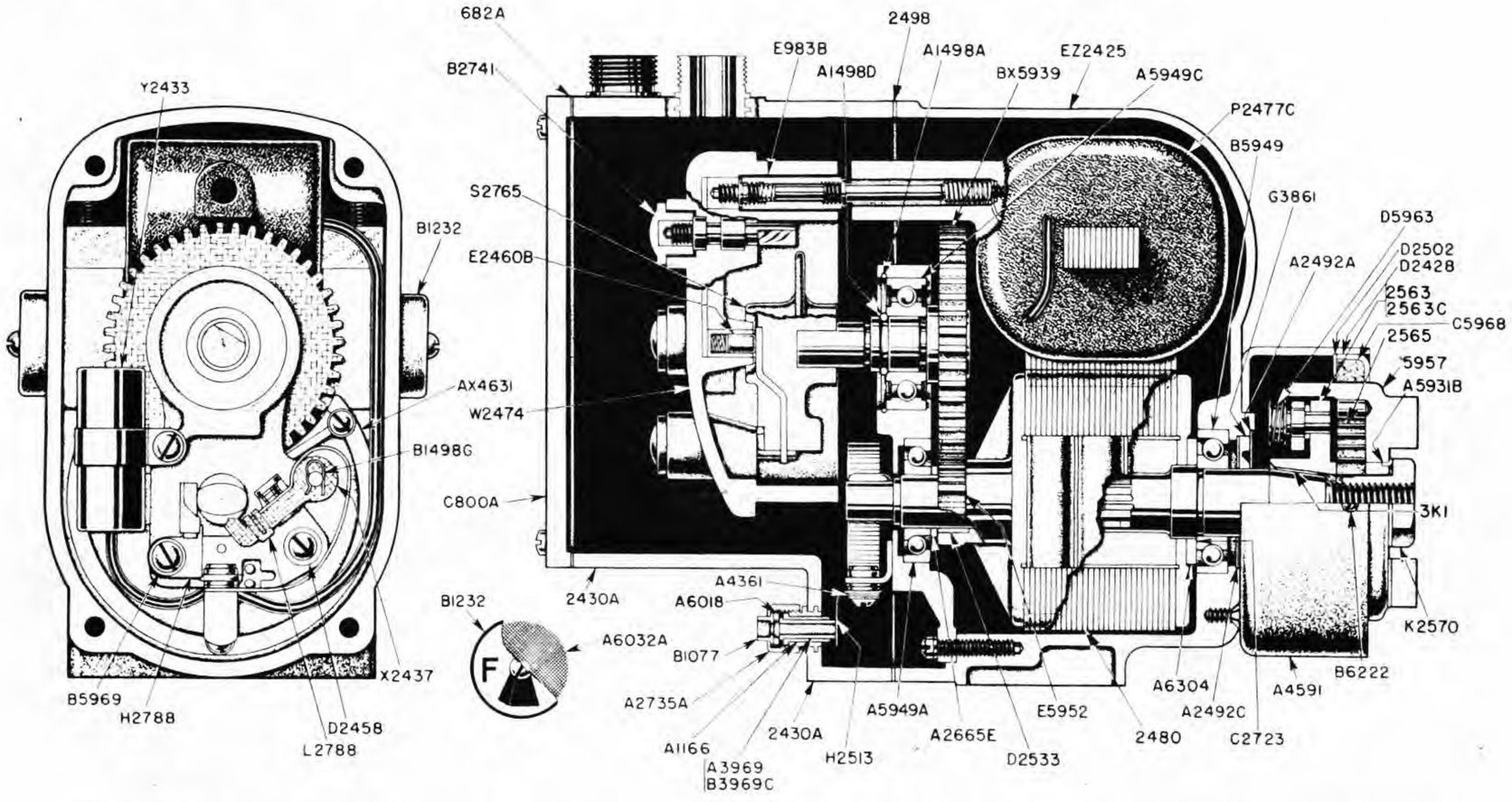

FAIRBANK-MORSE TYPE FM-E6A MAGNETO CCW, WITH STANDARD CONDENSER

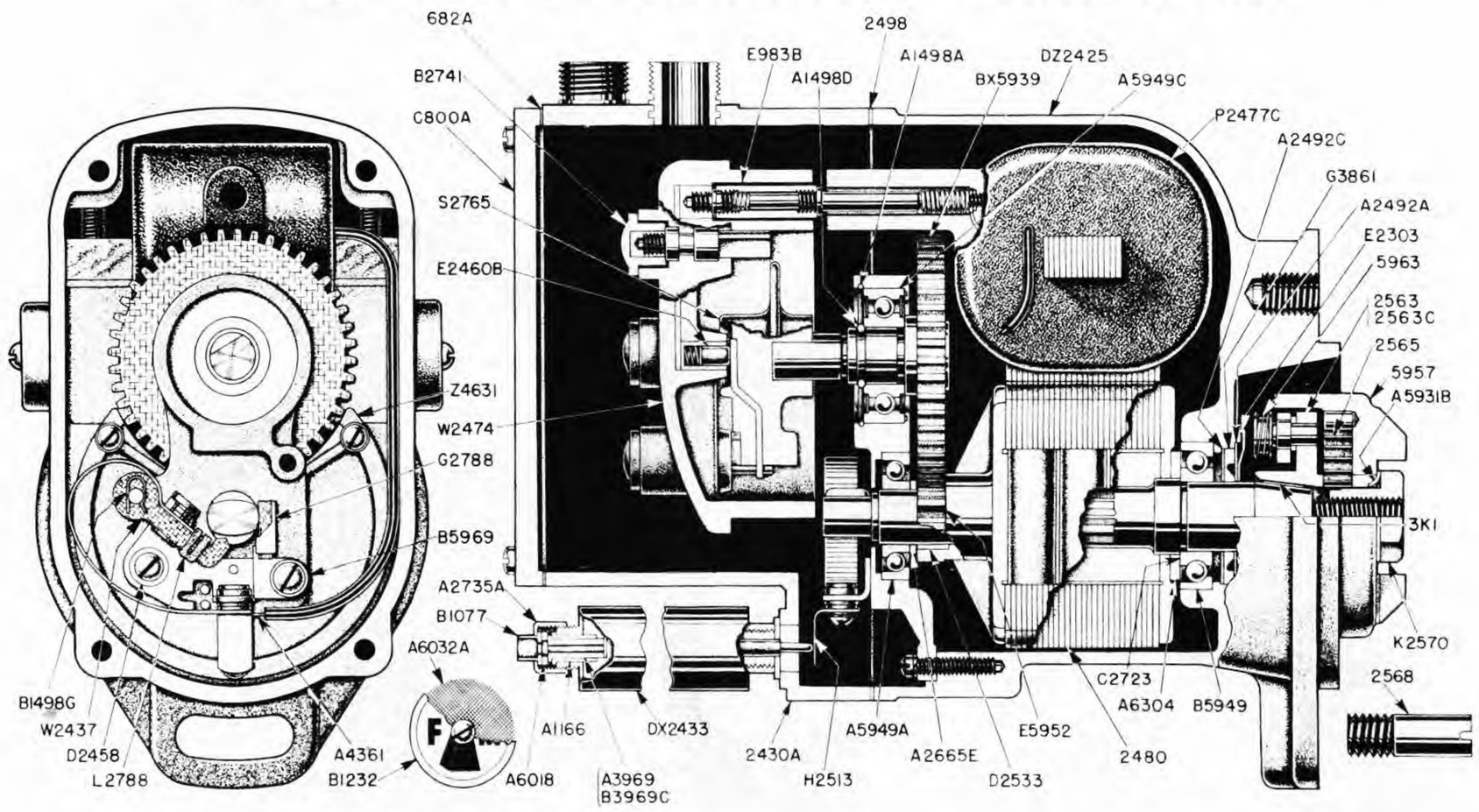

FAIRBANK-MORSE TYPE FM-E6B MAGNETO CW, WITH FEED-THRU CONDENSER

Order by Part No.	Name of Part. Unless otherwise specified, part is for both CW and CCW, base and flange magnetos.	No. Used
D682A	End Cap Cover Gasket (FM-E6A14A,E6B8,E6B97)	1
F682A	End Cap Cover Gasket (Standard)	1
C800A	End Cap Cover	1
8S8D	End Cap Cover Screw . . . . . (#8-32x$\frac{1}{2}$")	4
E983B	Suppressor Assembly	1
B1077	Primary Ground Cable Ferrule	1
A1166	Primary Ground Cable Terminal Insulator . .	1
B1232	Vent Hood	4
6S6N	Vent Hood Screw . . . . . (#6-32x$\frac{3}{8}$")	4
A1498A	Distributor Bearing Snap Ring	1
A1498D	Distributor Shaft Snap Ring	1
B1498G	Fulcrum Pin Snap Ring	1
E2303	Oil Slinger Baffle Disc (Flange)	1
DZ2425	Frame (Flange Mounting)	1
EZ2425	Frame (Base Mounting) . . . . . (2425 inc. B1232, 6032A, 6S6N)	1
D2428	Impulse Coupling Housing Cupped Washer . .	1
BX2430A	End Cap Assembly (FM-E6B8C)	1
Q2430A	End Cap Assembly (Vertical Outlets) . . . . (Inc. B1232, A2744A, D2744, A6032A, 6S6N)	1
W2430A	End Cap Assembly (FM-E6B69)	1
X2430A	End Cap Assembly	1
Y2430A	End Cap Assembly (FM-E6B16F) . . . . . (2430A inc. B1232, A6032A, 6S6N)	1
10S10D	End Cap Screw . . . . . (#10-24x$\frac{5}{8}$")	2
10S22D	End Cap Screw . . . . . (#10-24x1$\frac{3}{8}$")	2
DX2433	Feed thru Condenser (FM-E6B16J, E6B97) . .	1
EX2433	Feed thru Condenser (FM-E6B98A)	1
Y2433	Condenser (Standard)	1
8S6U	Condenser Mounting Screw . . . . (#8-32x$\frac{3}{8}$")	1
W2437	Breaker Arm, Stationary Bracket & Points(CW)	1
X2437	Breaker Arm, Stationary Bracket & Points(CCW	1
6S5N	Breaker Arm Terminal Screw . (#6-32x5/16")	1
6LW1	Breaker Arm Terminal Screw Lockwasher (#6)	1
6S6N	Contact Support Locking Screw . .(#6-32x$\frac{3}{8}$")	1
6LW1	Contact Support Locking Screw Lockwasher(#6)	1
8S6N	Contact Support Locking Screw . .(#8-32x$\frac{3}{8}$")	1
8LW3	Contact Support Locking Screw Lockwasher(#8)	1
D2458	Contact Support Locking Screw Washer . . .	1
E2460B	Brush and Spring Assembly	1
V2474	Distributor Block (FM-E6B69)	1
W2474	Distributor Block (Vertical Outlets) . . .	1
X2474	Distributor Block (Horizontal Outlets) . .	1
8S9D	Distributor Block Screw . . . (#8-32x9/16")	4
P2477C	Coil Assembly	1
25SS10A	Coil Bridge Setscrew . . . . . ($\frac{1}{4}$-20x$\frac{5}{8}$")	2
CZ2480	Magnetic Rotor Assembly	1
PV2480	Magnetic Rotor Assembly (FM-E6B16D, H) . .	1
VV2480	Magnetic Rotor Assembly (FM-E6B44)	1
A2492A	Magnetic Rotor Drive End Seal Outer Washer	1
A2492C	Magnetic Rotor Drive End Seal Inner Washer	1
M2498	End Cap to Frame Gasket (FM-E6A14A, E6B17).	1
Q2498	End Cap to Frame Gasket (Standard)	1

Order by Part No.	Name of Part. Unless otherwise specified, part is for both CW and CCW, base and flange magnetos.	No. Used
D2502	Impulse Coupling Housing Flat Washer (Base)	1
H2513	Primary Ground Spring	1
D2533	Magnetic Rotor Gear Pin	1
GW2563C	Impulse Coupling Assembly (UAL-1, CCW) . .	1
GZ2563	Impulse Coupling Hub (UB33, UB45, CW) . . .	1
JW2563C	Impulse Coupling Assembly (UB45, CW) . . .	1
NZ2563C	Impulse Coupling Assembly (UB33, CW) . . .	1
S2563	Impulse Coupling Hub (UB19, UB38, CW) . . .	1
VZ2563C	Impulse Coupling Assembly (UB38, CW) . . .	1
WX2563C	Impulse Coupling Assembly (UB19, CW) . . .	1
X2563	Impulse Coupling Hub (UAL-1, UBL-1, CCW) .	1
X2563C	Impulse Coupling Assembly (UBL-1, CCW) . .	1
D2565	Impulse Coupling Drive Spring (UB38) . . .	1
E2565	Imp. Cplg. Spring(UAL-1,UBL-1,UB19,UB38,UB45	1
A2568	Impulse Coupling Stop Pin (Flange, CW) . .	1
B2568	Impulse Coupling Stop Pin (Flange, CCW) . .	1
K2570	Impulse Coupling Nut	1
B2636	End Cap to Frame Plate (FM-E6B8C, E6B69) .	1
A2665E	Bearing Thrust Washer (Opp. Drive End) . .	1
C2723	Rotor Shaft Shim (Drive End, as needed) . .	1
A2735A	Primary Ground Cable Nut	1
B2741	Cable Outlet Knob (Use with W2474)	6
A2744A	Ground Switch Insert (Inc. in Q2430A) . . .	1
D2744	High Tension Insert (Inc. in Q2430A) . . .	6
S2765	Distributor Rotor	1
G2788	Cam Wick and Holder Assembly (CW)	1
H2788	Cam Wick and Holder Assembly (CCW)	1
L2788	Breaker Arm Felt Wick	1
G3861	Magnetic Rotor Drive End Seal	1
A3969	Primary Ground Cable Terminal	1
B3969C	Primary Ground Cable Terminal Group . . . . (Inc. B1077, A1166, A2735A, A3969, A6018)	1
A4361	Lead Wire Terminal for No. 8 Screw	2
A4591	Impulse Coupling Outer Shell (Base)	1
12S6G	Imp. Cplg. Outer Shell to Frame Screw (Base)	3
AX4631	Bearing Support Assembly (CCW)	1
Z4631	Bearing Support Assembly (CW)	1
8S8A	Bearing Support Screw . . . . . (#8-32x$\frac{1}{2}$")	3
8LW3	Bearing Support Screw Lockwasher . . .(#8)	3
A5931A	Imp. Cplg. Nut Lockwire (FM-E6B16H, E6B44)	1
A5931B	Impulse Coupling Nut Lockwasher	1
BX5939	Distributor Shaft and Gear Assembly	1
P5957	Impulse Coupling Shell (UAL-1)	1
Y5957	Impulse Coupling Shell (UB19)	1
B5963	Coupling Pawl Spring (UB19,UB33,UB38,UB45)	2
D5963	Coupling Pawl Spring (UAL-1, UBL-1)	2
C5968	Outer Shell Felt Washer (Base Mounting) . .	1
B5969	Contact Support Locking Screw Washer . . .	1
A6018	Ground Cable Terminal Insulator Washer . .	1
B6222	Impulse Coupling Outer Shell Screw	2
A6032A	Vent Screen	4
A6304	Magnetic Rotor Bearing Seal	1
3K1	Key (Rotor Shaft to Impulse Coupling) . . .	1

FAIRBANKS, MORSE & CO.
Manufacturers

Executive Offices
Chicago, Illinois
324604-065408M-BDN

Magneto Sales & Factory
Beloit, Wisconsin
Printed in U.S.A.