FAIRBANKS-MORSE

MAGNETO DIVISION
BELOIT, WISCONSIN

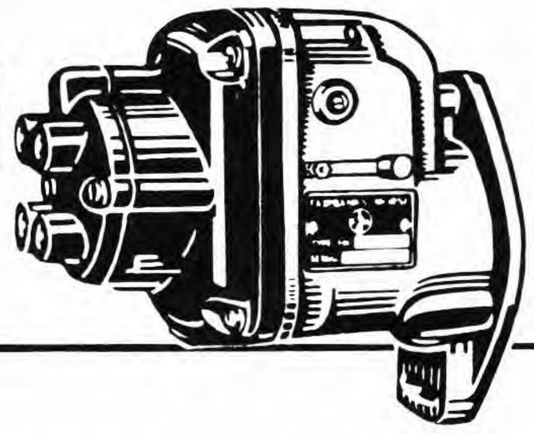

Instruction 3104
November 1958

TYPE FM-XE4B8C MAGNETOS FOR WAUKESHA MOTOR CORP
TYPES FM-XE4B14E-1 , 14F MAGNETOS FOR HERCULES MOTOR CORP
TYPE FM-XZE4B16X MAGNETOS FOR CONTINENTAL MOTOR CORP

SERVICE AND ADJUSTMENT INFORMATION

GENERAL DESCRIPTION

Modern magneto ignition systems are designed and engineered to provide quick easy starting and maximum dependability of operation with minimum adjustment and service.

Incorporated in each magneto are advances in engineering, design and construction that make Fairbanks-Morse magnetos the leaders in field performance.

SERVICE PROCEDURE

Field adjustments should be made only if malfunction of the engine occurs during the starting or operating cycle. When it is certain the magneto is the cause of poor engine performance, we only recommend servicing of the breaker points. The operator should clean or redress the point surfaces, adjust the contact points or replace the point set complete. If after the above work has been done on the points and the engine still does not function properly, the magneto should be taken complete to an authorized Fairbanks-Morse Service Account.

The following point setting should be used when checking or adjusting the contact points - Types FM-XE4B8C, FM-XE4B14E-1, FM-XE4B14F and FM-XZE4B16X - 0.015".

Since these magnetos do not require field lubrication no attempt should be made to oil or grease the magneto bearings. They should be repacked at a regular overhaul period. However, if the cam wick is dry and hard, it should be replaced with a new factory impregnated wick. Further field service is not recommended.

TIMING THE MAGNETO TO THE ENGINE

If the magneto has been removed from the engine for servicing, the operator must carefully follow the engine manufacturer's instruction for timing the magneto to the engine. When installing the magneto on the engine, be sure the magneto is properly attached and that the housing to engine gasket is in good condition.

MAGNETO SERVICE FACILITIES

Fairbanks-Morse Magneto Service Stations are located throughout the country and have the trained personnel and necessary equipment to insure efficient repair service to all owners of Fairbanks-Morse Magnetos.

Refer to Bulletin FM-18E, directory of Service Accounts, to locate the nearest service station.

Order by Part No.	Name of Part	No. Used FM-XE4B8C	No. Used FM-XE4B14F
A195	Name Plate	1	1
B682A	End Cap Cover Gasket	1	-
A799X	Cable Guide Block	1	-
A800A	End Cap Cover	1	-
8S8D	End Cap Cover Screw - #8-32x$\frac{1}{2}$"	3	-
B983B	High Tension Lead and Suppressor	1	1
A1077B	Cable Outlet Ferrule	4	-
D1182	Suppressor Insulator	1	1
B1232	Vent Cover - End Cap	2	2
6S6N	Vent Cover Screw - #6-32x$\frac{3}{8}$"	2	2
B1355	Primary Ground Strip Guide	-	1
D1498	Rotor Gear Snap Ring	1	1
G1498	Distributor Shaft Snap Ring	1	1
T1498	Fulcrum Pin Snap Ring	1	1
B1498B	Rotor Drive End Bearing Snap Ring	1	1
B1498D	Rotor Drive End Shaft Snap Ring	1	1
TZ2425	Housing	1	1
R2430A	End Cap	1	-
RX2430A	End Cap	-	1
10S10D	End Cap Screw - #10-24x$\frac{5}{8}$"	2	2
10S18D	End Cap Screw - #10-24x1$\frac{1}{8}$"	2	2
MX2433	Feed-thru Condenser	-	1
SXY2433	Condenser - Bracket in "X" position	1	-
6S6D	Condenser Mounting Screw - #6-32x$\frac{3}{8}$"	-	2
8S4U	Condenser Mounting Screw - #8-32x$\frac{1}{4}$"	1	-
W2437	Breaker Arm Support Bracket and Points-CW	-	1
W2437X	Breaker Arm Support Bracket and Points	1	-
6S6U	Breaker Arm Terminal Screw and Lockwasher - #6-32x$\frac{3}{8}$"	1	1
6S6U	Contact Support Locking Screw and Lockwasher - #6-32x$\frac{3}{8}$"	1	1
8S6U	Contact Support Locking Screw and Lockwasher - #8-32x$\frac{3}{8}$"	1	1
G2457A	Primary Ground Bushing	-	2
D2458	Contact Support Locking Screw Plate Washer - #6 - Not Shown	1	1
D2458	Primary Ground Screw Plate Washer - #6	-	1
E2460B	Center Brush and Spring	1	1
B2473	Cable Outlet Seal	4	-
H2473	Condenser "O" Ring Seal	-	1
B2474EX	Distributor Block	1	-
J2474E	Distributor Block	-	1
8S8D	Distributor Block Screw - #8-32x$\frac{1}{2}$"	4	4

Printed in U.S.A.

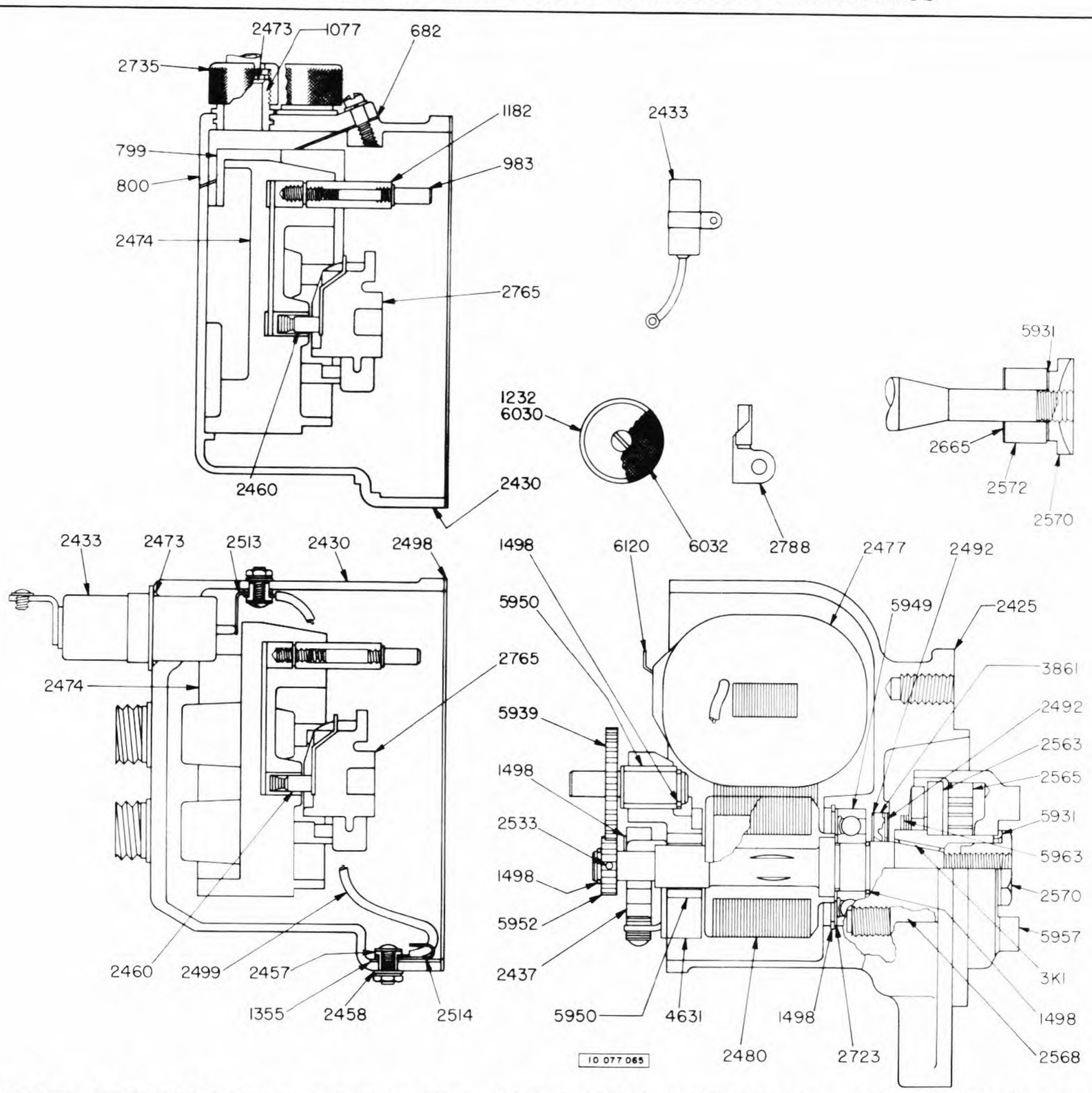

REPAIR CHART FM-XE4B8C AND FM-XE4B14F MAGNETOS

Order by Part No.	Name of Part	No. Used FM-XE4B8C	No. Used FM-XE4B14F	Order by Part No.	Name of Part	No. Used FM-XE4B8C	No. Used FM-XE4B14F
R2477C	Coil	1	1	X2765	Distributor Rotor	-	1
25SS14A	Coil Bridge Setscrew - $\frac{1}{4}$-20x$\frac{7}{8}$"	2	2	X2765S	Distributor Rotor	1	-
HW2480	Magnetic Rotor	1	-	G2788	Cam Wick and Holder	1	1
JW2480	Magnetic Rotor	-	1	G3861	Rotor Drive End Seal	1	1
A2492A	Rotor Drive End Seal Outer Washer	1	1	X4631	Bearing Support	1	1
A2492C	Rotor Drive End Seal Inner Washer	1	1	8S6G	Bearing Support Screw - #8-32x$\frac{3}{8}$"	4	4
K2498	End Cap to Housing Gasket	1	1	A5931A	Impulse Coupling Nut Lockwasher	1	-
K2499A	Primary Terminal Wire Assembly	-	1	A5931B	Impulse Coupling Nut Lockwasher	-	1
K2513	Condenser Contact	-	1	Q5939	Distributor Gear Assembly	-	1
W2514	Primary Ground to Contact Support	-	1	Q5939X	Distributor Gear Assembly	1	-
6S8N	Primary Ground Screw - #6-32x$\frac{1}{2}$"	-	2	C5949	Rotor Drive End Bearing	1	1
6LW1	Primary Ground Lockwasher	-	2	A5950A	Rotor Cam End Bearing	1	1
6N1	Primary Ground Nut	-	2	C5950D	Distributor Bearing	1	-
F2533	Rotor Gear Pin	1	1	D5950C	Distributor Bearing	-	1
S2563	Coupling Hub Assembly	1	1	E5952	Magnetic Rotor Gear	1	-
S2563C	Impulse Coupling Complete	-	1	F5952	Magnetic Rotor Gear	-	1
TX2563C	Impulse Coupling Complete	1	-	N5957	Impulse Coupling Shell	1	1
D2565	Impulse Coupling Drive Spring	-	1	B5963	Impulse Coupling Pawl Spring	2	2
E2565	Impulse Coupling Drive Spring	1	-	B5969	Contact Support Locking Screw Plate Washer #8 - Not Shown	1	1
A2568	Impulse Coupling Pawl Stop Pin	1	1				
K2570	Impulse Coupling Nut	-	1	B6030A	Vent Cover Housing	2	2
P2570	Impulse Coupling Nut	1	-	6S4L	Vent Cover Screw - #6-32x$\frac{1}{4}$"	2	2
B2572	Impulse Coupling Bushing	1	-	A6032A	Vent Screen - End Cap	2	2
A2665H	Impulse Coupling Bushing Washer	1	-	C6032B	Vent Screen - Housing	2	2
C2723	Rotor Drive End Bearing Shim - as needed	2	2	B6120	Coil Clip	1	1
				6S3W	Coil Clip Screw - #6-32x3/16"	1	1
A2735	Cable Outlet Nut	4	-	3K1	Key - Rotor Shaft to Impulse Coupling	1	1

Parts with service number ending in "X" are fungus treated.

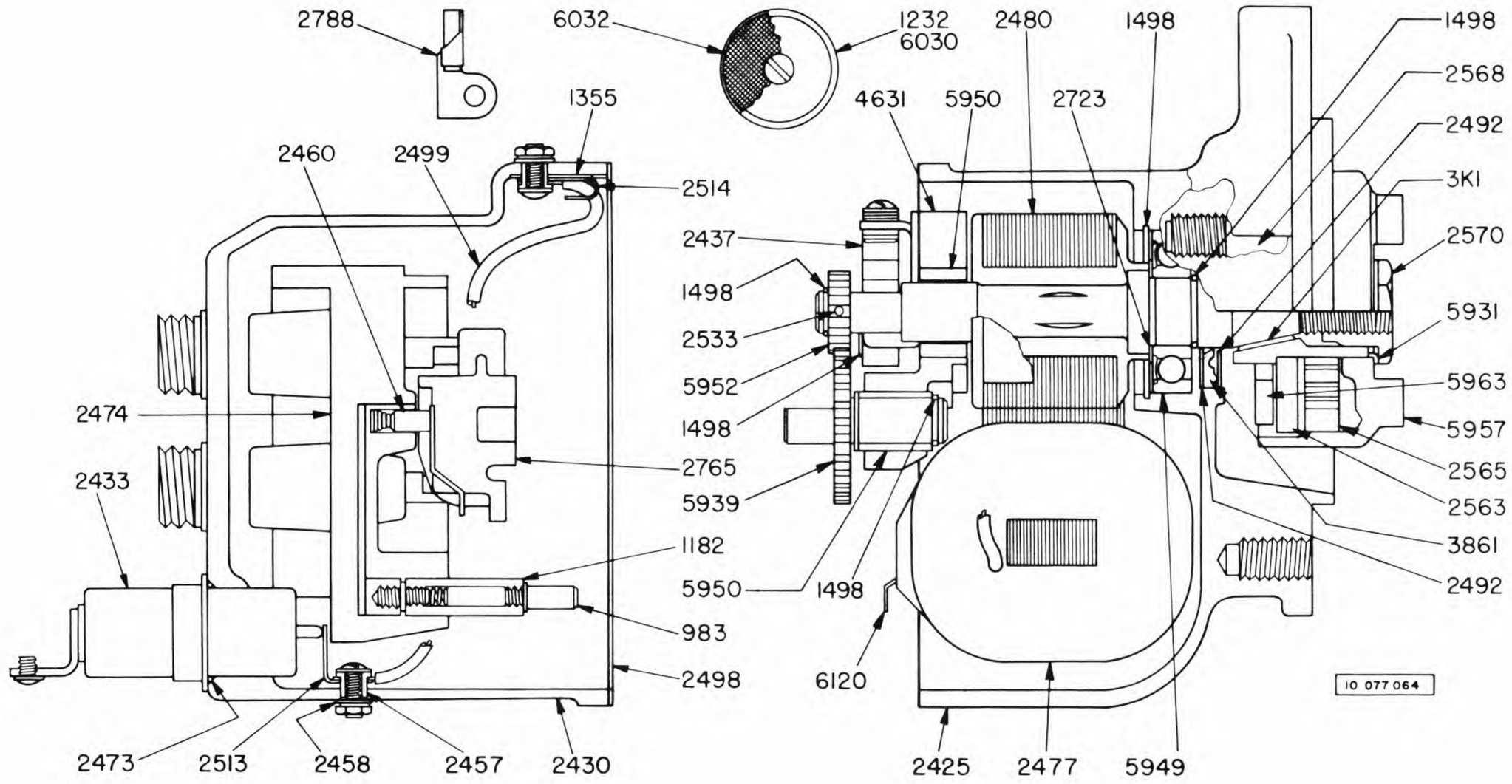

REPAIR CHART FOR FM-XE4B14E-1 MAGNETOS

Order by Part No.	Name of Part	No. Used	Order by Part No.	Name of Part	No. Used
A195	Name Plate	1	A2492C	Rotor Drive End Seal Inner Washer	1
B983B	High Tension Lead and Suppressor Assembly	1	K2498	End Cap to Housing Gasket	1
D1182	Suppressor Insulator	1	K2499A	Primary Terminal Wire Assembly	1
B1232	Vent Cover - End Cap	2	K2513	Condenser Contact	1
6S6N	Vent Cover Screw - #6-32x$\frac{3}{8}$"	2	W2514	Primary Ground to Contact Support	1
B1355	Primary Ground Strip Guide	2	6S8N	Primary Ground Screw - #6-32x$\frac{1}{2}$"	2
D1498	Rotor Gear Snap Ring	1	6LW1	Primary Ground Screw Lockwasher	2
G1498	Distributor Shaft Snap Ring	1	6N1	Primary Ground Screw Nut	2
T1498	Fulcrum Pin Snap Ring	1	F2533	Rotor Gear Pin	1
B1498B	Rotor Drive End Bearing Snap Ring	1	S2563	Coupling Hub Assembly	1
B1498D	Rotor Drive End Shaft Snap Ring	1	UZ2563C	Impulse Coupling Complete	1
QW2425	Housing	1	E2565	Impulse Coupling Drive Spring	1
RX2430A	End Cap	1	A2568	Impulse Coupling Pawl Stop Pin	1
10S10D	End Cap Screw - #10-24x$\frac{5}{8}$"	2	K2570	Impulse Coupling Nut	1
10S18D	End Cap Screw - #10-24x1$\frac{1}{8}$"	2	C2723	Rotor Drive End Bearing Shim - as needed	2
MX2433	Feed-thru Condenser	1	X2765	Distributor Rotor	1
6S6D	Condenser Mounting Screw - #6-32x$\frac{3}{8}$"	2	C2788	Cam Wick and Holder	1
W2437	Breaker Arm, Support Bracket and Points-CW	1	G3861	Rotor Drive End Seal	1
			X4631	Bearing Support	1
6S6U	Breaker Arm Terminal Screw and Lockwasher - #6-32x$\frac{3}{8}$"	1	8S6G	Bearing Support Screw - #8-32x$\frac{3}{8}$"	4
			A5931B	Impulse Coupling Nut Lockwasher	1
6S6U	Contact Support Locking Screw and Lockwasher - #6-32x$\frac{3}{8}$"	1	Q5939	Distributor Gear Assembly	1
			C5949	Rotor Drive End Bearing	1
8S6U	Contact Support Locking Screw and Lockwasher - #8-32x$\frac{3}{8}$"	1	A5950A	Rotor Cam End Bearing	1
			D5950C	Distributor Bearing	1
G2457A	Primary Ground Bushing	2	F5952	Rotor Gear	1
D2458	Contact Support Locking Screw Plate Washer - #6 - Not Shown	1	HY5957	Impulse Coupling Shell	1
			B5963	Impulse Coupling Pawl Spring	2
D2458	Primary Ground Plate Washer - #6	4	B5969	Contact Support Locking Screw Plate Washer - #8 - Not Shown	1
E2460B	Center Brush and Spring	1			
H2473	Condenser "O" Ring Seal	1	B6030A	Vent Cover - Housing	2
J2474E	Distributor Block	1	A6032A	Vent Screen - End Cap	2
8S8D	Distributor Block Screw - #8-32x$\frac{1}{2}$"	4	6S4U	Vent Cover Screw - #6-32x$\frac{1}{4}$"	2
R2477C	Coil	1	C6032B	Vent Screen - Housing	2
25SS14A	Coil Bridge Setscrew - $\frac{1}{4}$-20x$\frac{7}{8}$"	2	B6120	Coil Clip	1
JW2480	Magnetic Rotor	1	6S3W	Coil Clip Screw - #6-32x3/16"	1
A2492A	Rotor Drive End Seal Outer Washer	1	3K1	Key - Rotor Shaft to Impulse Coupling	1

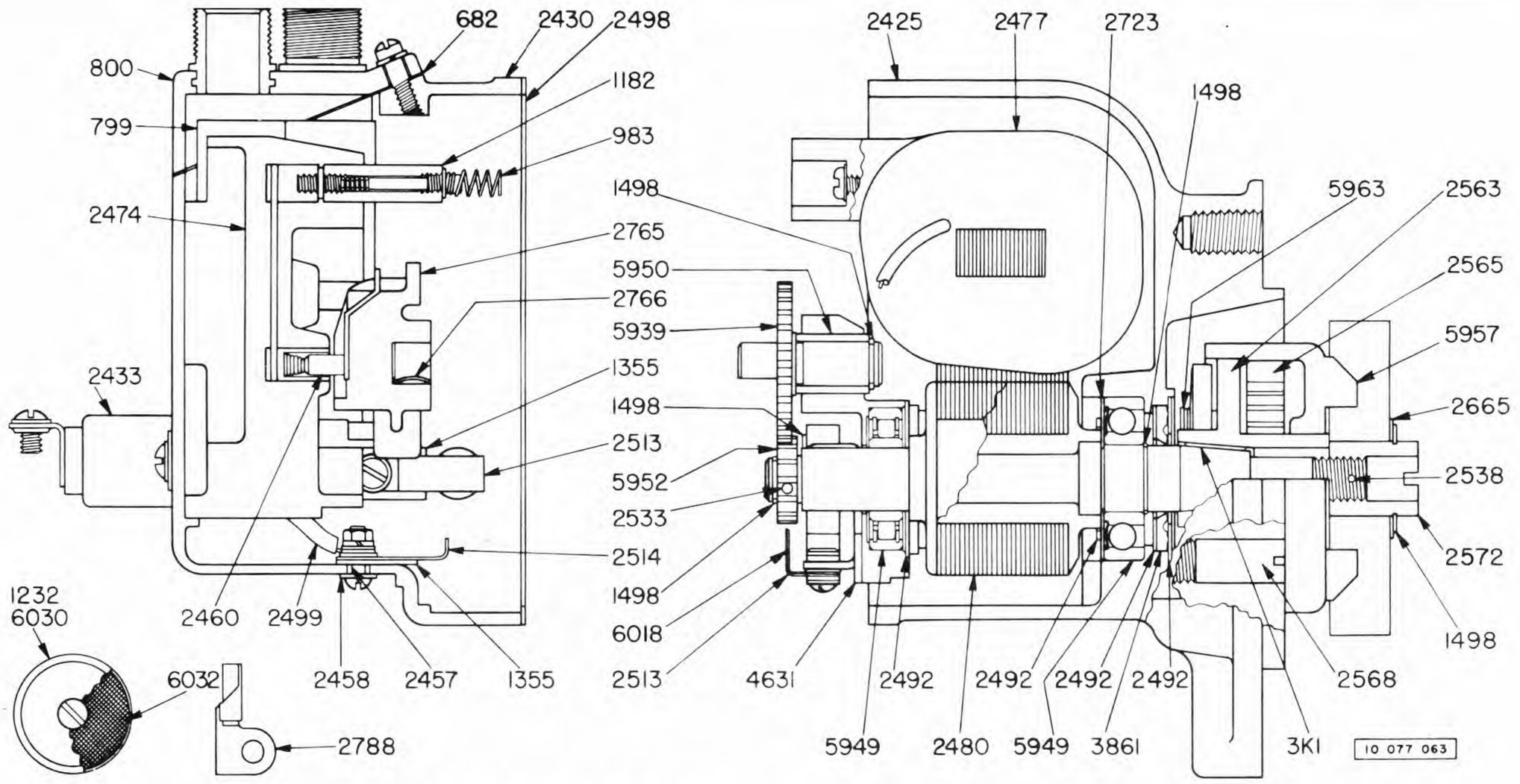

REPAIR CHART FOR FM-XZE4B16X MAGNETOS

Order by Part No.	Name of Part	No. Used	Order by Part No.	Name of Part	No. Used
25-38	Impulse Coupling Bushing Roll Pin	1	A2492C	Rotor Drive End Seal Inner Washer	1
A195	Name Plate	1	A2492C	Rotor Cam End Grease Retaining Washer	1
B682A	End Cap Cover Gasket	1	A2492D	Rotor Drive End Bearing Retaining Washer	1
A799X	Cable Guide Block	1	8S5X	Rotor Drive End Bearing Retaining Washer Screw - #8-32x5/16"	1
A800A	End Cap Cover	1	K2498	End Cap to Housing Gasket	1
8S6D	End Cap Cover Screw - #8-32x$\frac{3}{8}$"	3	G2499A	Primary Terminal Wire Assembly	1
F983B	High Tension Lead and Suppressor	1	T2413	Primary Ground Contact Strip	1
6S3W	High Tension Lead Contact Screw - #6-32x3/16"	1	D2513A	Primary Ground Strip	1
D1182	Suppressor Insulator	1	T2514	Primary Ground Contact Strip	1
B1232	Vent Cover - End Cap	1	6S8N	Primary Ground Screw - #6-32x$\frac{1}{2}$"	2
6S6N	Vent Cover Screw - #6-32x$\frac{3}{8}$"	1	6LW1	Primary Ground Screw Lockwasher	2
B1355X	Primary Ground Strip Guide	2	6N1	Primary Ground Screw Nut	2
D1498	Magnetic Rotor Gear Snap Ring	1	F2533	Rotor Gear Pin	1
G1498	Distributor Shaft Snap Ring	1	CZ2563	Coupling Hub Assembly	1
T1498	Fulcrum Pin Snap Ring	1	BW2563C	Impulse Coupling Complete	1
B1498D	Rotor Drive End Shaft Snap Ring	1	E2565	Impulse Coupling Drive Spring	1
B1498H	Magneto Drive Gear Snap Ring	1	A2568	Impulse Coupling Pawl Stop Pin	1
NV2425	Housing	1	J2572	Impulse Coupling Bushing	1
UX2430A	End Cap	1	B2665J	Impulse Coupling Gear Washer	1
10S10D	End Cap Screw - #10-24x$\frac{5}{8}$"	2	C2723	Rotor Drive End Bearing Shim - as needed	2
10S18D	End Cap Screw - #10-24x1$\frac{1}{8}$"	2	X2765X	Distributor Rotor	1
CX2433	Feed-thru Condenser	1	A2766	Distributor Rotor Spring Clip	1
8S4U	Condenser Mounting Screw - #8-32x$\frac{1}{4}$"	2	G2788	Cam Wick and Holder	1
W2437X	Breaker Arm, Support Bracket and Points - CW	1	G3861	Rotor Drive End Seal	1
6S6U	Breaker Arm Terminal Screw and Lockwasher - #6-32x$\frac{3}{4}$"	1	UX4631	Bearing Support	1
6S6U	Contact Support Locking Screw and Lockwasher - #6-32x$\frac{3}{8}$"	1	8S6G	Bearing Support Screw - #8-32x$\frac{3}{8}$"	4
8S6U	Contact Support Locking Screw and Lockwasher - #8-32x$\frac{3}{8}$"	1	Q5939X	Distributor Gear Assembly	1
H2457AX	Primary Ground Bushing	2	C5949	Rotor Drive End Bearing	1
D2458	Primary Ground Screw Plate Washer #6	2	C5949A	Rotor Cam End Bearing	1
D2458	Contact Support Locking Screw Plate Washer - #6	1	D5950C	Distributor Bearing	1
E2460B	Center Brush and Spring	1	F5952	Magnetic Rotor Gear	1
B2474EX	Distributor Block	1	Y5957	Impulse Coupling Shell	1
8S6D	Distributor Block Screw - #8-32x$\frac{3}{8}$"	4	B5963	Impulse Coupling Pawl Spring	2
RS2477C	Coil	1	B5969	Contact Support Locking Screw Plate Washer - #8	1
25SS14A	Coil Bridge Setscrew - $\frac{1}{4}$-20x$\frac{7}{8}$"	2	L6018X	Primary Ground Strip Insulator	1
HR2480	Magnetic Rotor	1	B6030A	Vent Cover - Housing	1
A2492A	Rotor Drive End Seal Outer Washer	1	6S4L	Vent Cover Screw - #6-32x$\frac{1}{4}$"	1
			A6032A	Vent Screen - End Cap	1
			C6032B	Vent Screen - Housing	1
			3K1	Key - Rotor Shaft to Impulse Coupling	1

Parts with service number ending in "X" are fungus treated.