FAIRBANKS-MORSE

MAGNETO and ENGINE ACCESSORIES DIVISION

BELOIT, WISCONSIN

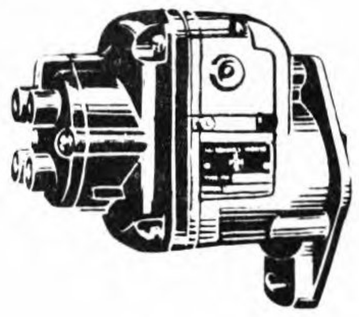

Magneto Parts Data

Section X-124

Type FM-E6B16H

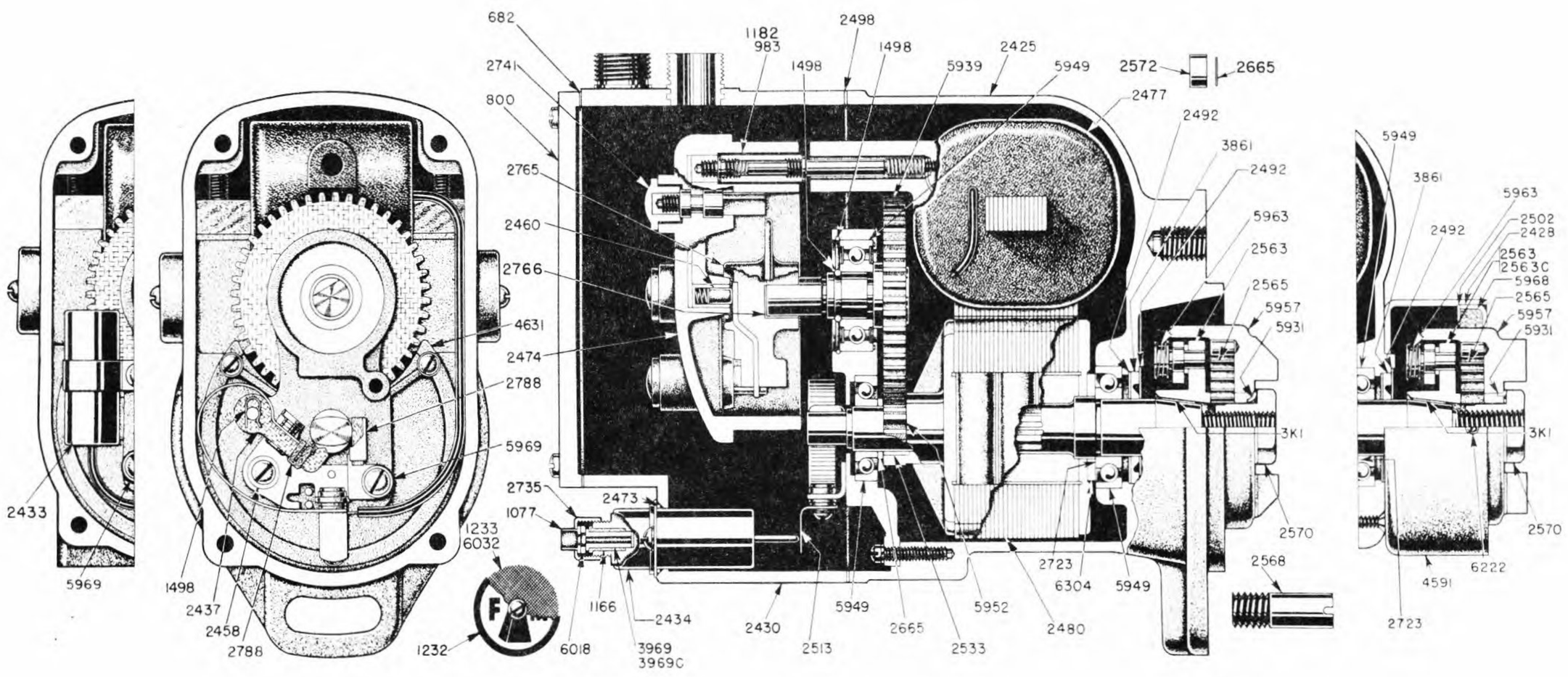

Rot. CW, Imp. Cplg UB, Lag Angle 55°, Continental Motors

Order by Part No.	Name of Part	No. Used
A195	Name Plate	1
F682A	End Cap Cover Gasket	1
C800A	End Cap Cover	1
8S8D	End Cap Cover Screw - #8-32x$\frac{1}{2}$"	4
E983B	High Tension Lead Rod and Suppressor	1
B1077	Ground Cable Ferrule	1
A1166X	Ground Cable Insulator	1
D1182	Suppressor Insulator	1
B1232	Vent Cover	4
6S6N	Vent Cover Screw - #6-32x$\frac{3}{8}$"	4
C1498	Distributor Shaft Snap Ring	1
T1498	Fulcrum Pin Snap Ring	1
A1498A	Distributor Bearing Snap Ring	1
DZ2425	Housing	1
Z2430A	End Cap	1
10S10D	End Cap Screw - #10-24x$\frac{5}{8}$"	2
10S22D	End Cap Screw - #10-24x1$\frac{3}{8}$"	2
SXY2433	Condenser - Bracket in "Y" Position	1
8S6U	Condenser Mounting Screw - #8-32x$\frac{3}{8}$"	1
A2434	Primary Circuit Connector	1
6S6D	Primary Circuit Connector Screw - #6-32x$\frac{3}{8}$"	2
A2437AX	Breaker Arm, Support Bracket and Points	1
6S6U	Breaker Arm Terminal Screw and Lockwasher - #6-32x$\frac{3}{8}$"	1
6S6U	Contact Support Locking Screw and Lockwasher - #6-32x$\frac{3}{8}$"	1
8S6U	Contact Support Locking Screw and Lockwasher - #8-32x$\frac{3}{8}$"	1
D2458	Contact Support Locking Screw Plate Washer - #6	1
E2460B	Center Brush and Spring	1
H2473	Condenser "O" Ring Seal	1
W2474X	Distributor Block	1
8S9D	Distributor Block Screw - #8-32x9/16"	4
P2477C	Coil	1
25SS10A	Coil Bridge Setscrew - $\frac{1}{4}$-20x$\frac{5}{8}$"	2

Order by Part No.	Name of Part	No. Used
PV2480	Magnetic Rotor	1
A2492A	Rotor Drive End Seal Outer Washer	1
A2492C	Rotor Drive End Seal Inner Washer	1
Q2498	End Cap to Housing Gasket	1
H2513	Primary Ground Spring	1
D2533	Rotor Gear Pin	1
DZ2563	Coupling Hub Assembly	1
CW2563C	Impulse Coupling Complete	1
E2565	Impulse Coupling Drive Spring	1
A2568	Impulse Coupling Pawl Stop Pin	1
M2570	Impulse Coupling Nut	1
H2572	Impulse Coupling Bushing	1
A2665E	Rotor Bearing Spacer	1
C2723	Rotor Drive End Bearing Shim- as needed	1
A2735A	Ground Cable Nut	1
B2741X	Cable Outlet Knob	1
Z2765X	Distributor Rotor	1
A2766	Distributor Rotor Spring Clip	1
G2788	Cam Wick and Holder	1
L2788	Breaker Arm Wick	1
G3861	Rotor Drive End Seal	1
A3969	Ground Cable Terminal	1
B3969C	Ground Cable Terminal Group	1
Z4631	Bearing Support	1
8S8A	Bearing Support Screw - #8-32x$\frac{1}{2}$"	3
8LW3	Bearing Support Lockwasher	3
BX5939X	Distributor Shaft and Gear	1
B5949	Rotor Drive End Bearing	1
A5949A	Rotor Cam End Bearing	1
A5949C	Distributor Bearing	1
E5952	Rotor Gear	1
FX5957	Impulse Coupling Shell	1
B5963	Impulse Coupling Pawl Spring	2
B5969	Contact Support Locking Screw Plate Washer - #8	1
A6018X	Ground Cable Insulator Washer	1
A6032A	Vent Screen	4
A6304	Rotor Bearing Seal	1
3K1	Key-Rotor Shaft to Impulse Coupling	1
GK28	Gasket Kit	1
SK29	Service Kit	1

Parts with service numbers ending in "X" are fungus treated.