# FAIRBANKS-MORSE

**MAGNETO and ENGINE ACCESSORIES DIVISION**

**BELOIT, WISCONSIN**

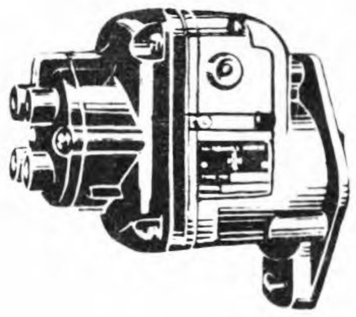

Magneto Parts Data

Section X-133

Type FM-E6B16T-1

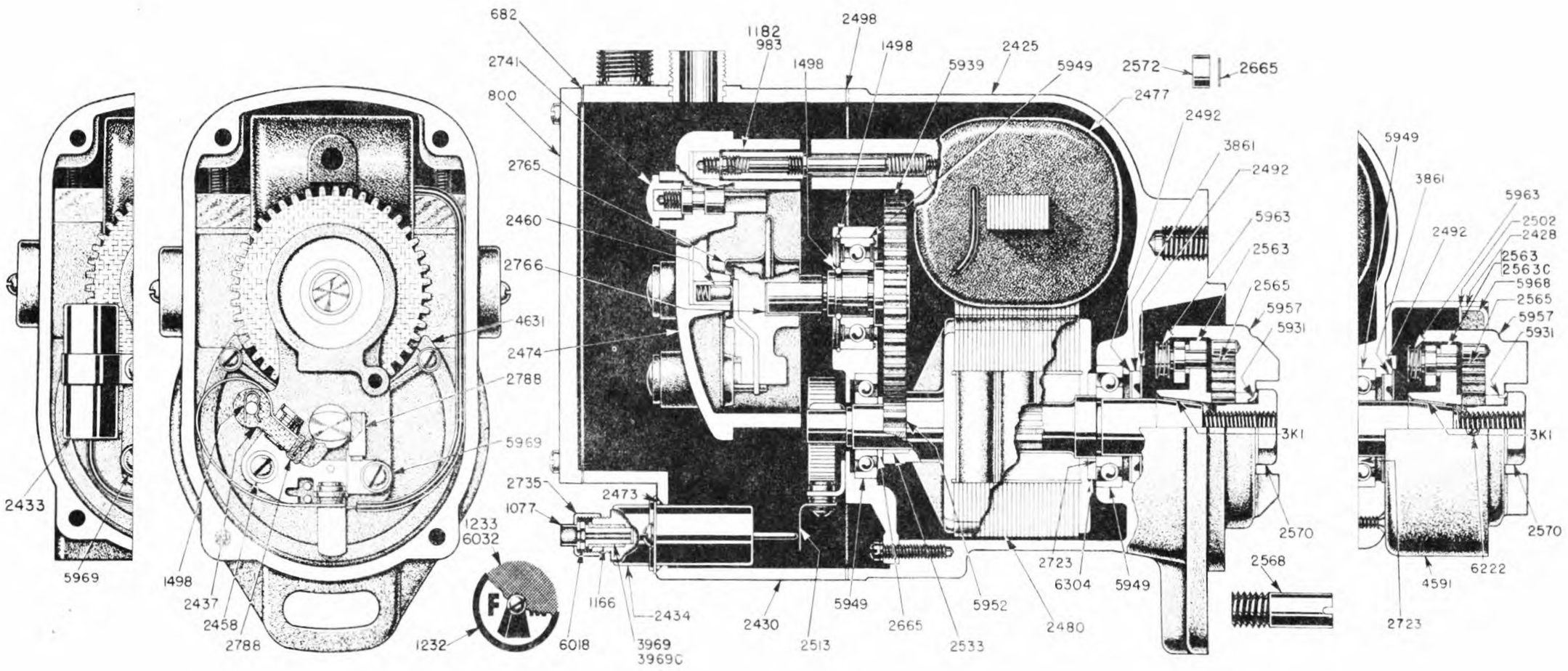


Rot. CW, Imp. Cplg. UB, Lag Angle 50°, Continental Motors #T415M401

| Order by Part No. | Name of Part | No. Used |
|---|---|---|
| A195 | Name Plate | 1 |
| F682A | End Cap Cover Gasket | 1 |
| C800A | End Cap Cover | 1 |
| 8S8D | End Cap Cover Screw - #8-32x$\frac{1}{2}$" | 4 |
| E983B | High Tension Lead Rod and Suppressor | 1 |
| D1182 | Suppressor Insulator | 1 |
| B1232 | Vent Cover | 4 |
| 6S6N | Vent Cover Screw - #6-32x$\frac{3}{8}$" | 4 |
| C1498 | Distributor Shaft Snap Ring | 1 |
| T1498 | Fulcrum Pin Snap Ring | 1 |
| A1498A | Distributor Bearing Snap Ring | 1 |
| ZZ2425 | Housing | 1 |
| Z2430A | End Cap | 1 |
| 10S10D | End Cap Screw - #10-24x$\frac{5}{8}$" | 2 |
| 10S22D | End Cap Screw - #10-24x1$\frac{3}{8}$" | 2 |
| HX2433 | Feed-thru Condenser | 1 |
| 6S6D | Condenser Mounting Screw - #6-32x$\frac{3}{8}$" | 2 |
| A2437A | Breaker Arm, Support Bracket and Points | 1 |
| 6S6U | Breaker Arm Terminal Screw and Lockwasher - #6-32x$\frac{3}{8}$" | 1 |
| 6S6U | Contact Support Locking Screw and Lockwasher - #6-32x$\frac{3}{8}$" | 1 |
| 8S6U | Contact Support Locking Screw and Lockwasher - #8-32x$\frac{3}{4}$ | 1 |
| D2458 | Contact Support Locking Screw Plate Washer - #6 | 1 |
| E2460B | Center Brush and Spring | 1 |
| H2473 | Condenser "O" Ring Seal | 1 |
| W2474 | Distributor Block | 1 |
| 8S9D | Distributor Block Screw - #8-32x9/16" | 4 |
| P2477C | Coil | 1 |
| 25SS10A | Coil Bridge Setscrew - $\frac{1}{4}$-20x$\frac{5}{8}$" | 2 |
| VV2480 | Magnetic Rotor | 1 |
| A2492A | Rotor Drive End Seal Outer Washer | 1 |
| A2492C | Rotor Drive End Seal Inner Washer | 1 |
| Q2498 | End Cap to Housing Gasket | 1 |



PRINTED IN U.S.A.

| Order by Part No. | Name of Part | No. Used |
|---|---|---|
| H2513 | Primary Ground Spring | 1 |
| D2533 | Rotor Gear Pin | 1 |
| G2533 | End Cap to Housing Dowel | 2 |
| GZ2563 | Coupling Hub Assembly | 1 |
| JW2563C | Impulse Coupling Complete | 1 |
| E2565 | Impulse Coupling Drive Spring | 1 |
| A2568 | Impulse Coupling Pawl Stop Pin | 1 |
| P2570 | Impulse Coupling Nut | 1 |
| B2572 | Impulse Coupling Bushing | 1 |
| A2665E | Bearing Cam End Thrust Washer | 1 |
| A2665H | Impulse Coupling Bushing Shim | 1 |
| C2723 | Rotor Drive End Bearing Shim - as needed | 2 |
| B2741 | Cable Outlet Knob | 6 |
| Z2765 | Distributor Rotor | 1 |
| A2766 | Distributor Rotor Spring Clip | 1 |
| J2788 | Cam Wick and Holder | 1 |
| L2788 | Breaker Arm Wick | 1 |
| G3861 | Rotor Drive End Seal | 1 |
| Z4631 | Bearing Support | 1 |
| 8S8A | Bearing Support Screw - #8-32x$\frac{1}{2}$" | 3 |
| 8LW3 | Bearing Support Lockwasher | 3 |
| A5931A | Impulse Coupling Nut Lockwire | 1 |
| BX5939 | Distributor Shaft and Gear Assembly | 1 |
| B5949 | Rotor Drive End Bearing | 1 |
| A5949A | Rotor Cam End Bearing | 1 |
| A5949C | Distributor Bearing | 1 |
| E5952 | Magnetic Rotor Gear | 1 |
| EY5957 | Impulse Coupling Shell | 1 |
| B5963 | Impulse Coupling Pawl Spring | 2 |
| B5969 | Contact Support Locking Screw Plate Washer - #8 | 1 |
| A6032A | Vent Screen | 4 |
| A6304 | Rotor Bearing Oil Seal | 1 |
| 3K1 | Key - Rotor Shaft to Impulse Coupling | 1 |
| GK28 | Gasket Kit | 1 |
| SK29 | Service Kit | 1 |