FAIRBANKS MORSE

A MAJOR INDUSTRIAL COMPONENT OF

FAIRBANKS WHITNEY

MAGNETO PARTS DATA

MAGNETO and ENGINE ACCESSORIES DIVISION • BELOIT, WISCONSIN

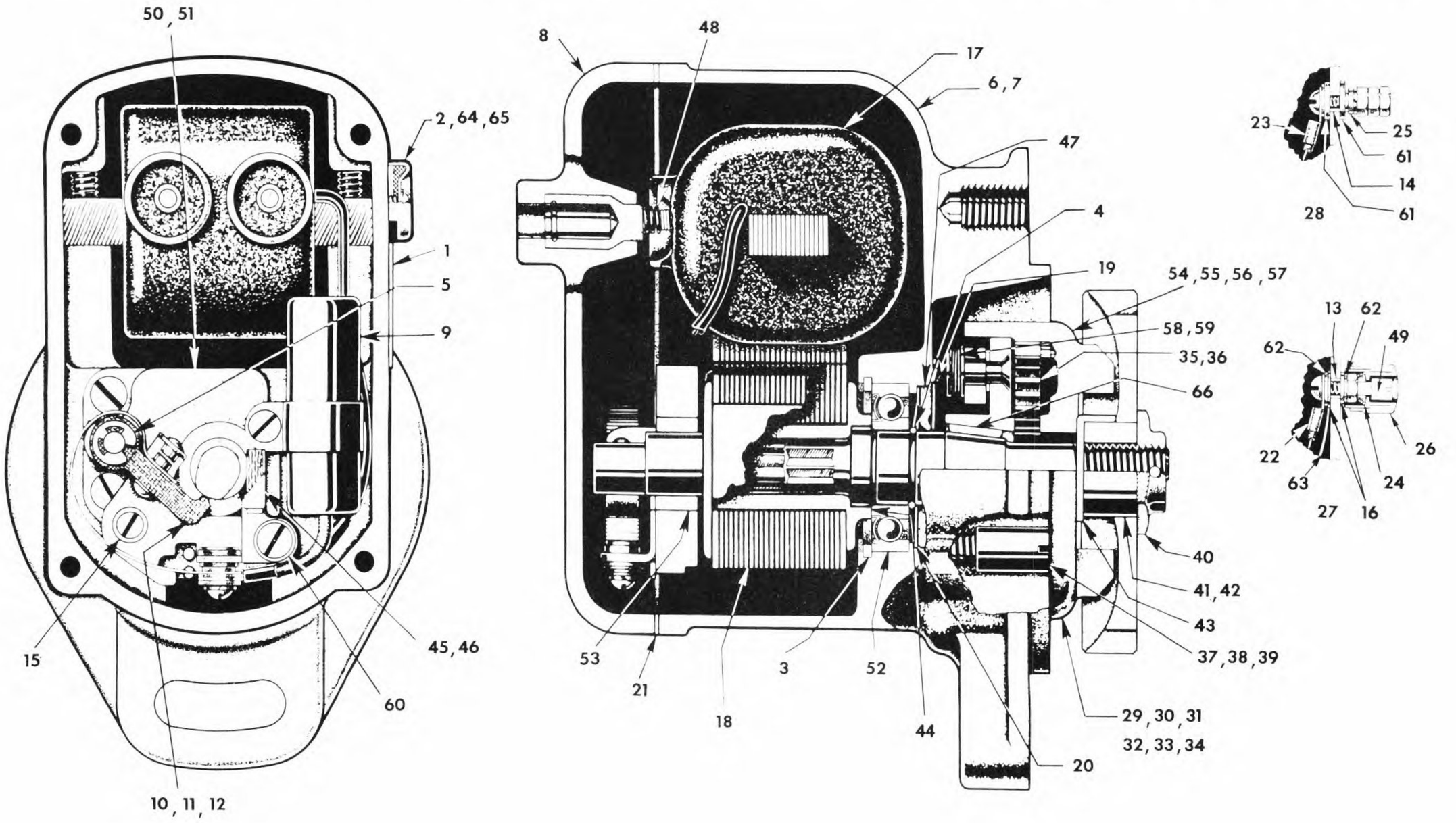

RENEWAL PARTS DATA

TYPES FM-X1-2B7, FM-X1-2B7-1, FM-X1-2B7A, FM-X1-2B44, FM-X1-2B69 MAGNETOS

Illustration shown is of a CW rotation magneto. Parts for a CCW rotation magneto are similar but in a different position.

Data	Engine Manufacturer and Specification Number	Type Magnetos				
		FM-X1-2B7	FM-X1-2B7-1	FM-X1-2B7A	FM-X1-2B44	FM-X1-2B69
Rotation		CW	CW	CW	CW	CCW
Imp. Cplg		UB	UB	UB	UB	UBL
Lag Angle		30°	20°	30°	20°	15°
	Wisconsin Motor Corp. Spec. No. Y-80	X	X	-	-	-
	Wisconsin Motor Corp. Spec. No. Y-80-A	-	-	X	-	-
	Kohler Company Spec. No. A270590	-	-	-	X	-
	D. W. Onan & Sons Inc.	-	-	-	-	X

Ref. No.	Order by Part No.	Name of Part	No. Used				
			FM-X1-2B7	FM-X1-2B7-1	FM-X1-2B7A	FM-X1-2B44	FM-X1-2B69
1	A195	Name Plate	1	1	1	1	1
2	A1233	Vent Copper Mesh	-	-	-	-	2
3	B1498B	Bearing Snap Ring	1	1	1	1	1
4	B1498D	Shaft Snap Ring	1	1	1	1	1
5	C1498G	Fulcrum Pin Snap Ring	1	1	1	1	1

Ref. No.	Order by Part No.	Name of Part	No. Used				
			FM-X1-2B7	FM-X1-2B7-1	FM-X1-2B7A	FM-X1-2B44	FM-X1-2B69
6	DY2425	Housing	1	1	1	1	-
7	KZ2425	Housing	-	-	-	-	1
8	BY2430	End Cap	1	1	1	1	1
	10S10D	End Cap Screw - #10-24x5/8"	-	-	-	-	4
	10S12D	End Cap Screw - #10-24x3/4"	4	4	4	4	-
9	SXY2433	Condenser	1	1	1	1	1
	8S4U	Condenser Screw - #8-32x1/4"	1	1	1	1	1
10	A2437A	Breaker Point Set	1	1	-	1	-
11	A2437AX	Breaker Point Set	-	-	1	-	-
12	B2437A	Breaker Point Set	-	-	-	-	1
	6S6Z	Breaker Terminal Screw - #6-32x3/8"	1	1	1	1	1
	6S6U	Contact Support Screw - #6-32x3/8"	1	1	1	1	1
	8S6U	Contact Support Screw - #8-32x3/8"	1	1	1	1	1
13	E2457A	Switch Bushing	-	-	-	-	1
14	K2457A	Switch Bushing	1	1	1	1	-
15	D2458	Support Screw Washer - #6	1	1	1	1	1
16	D2458	Ground Switch Washer - #6	-	-	-	-	2
17	Q2477C	Coil	1	1	1	1	1
	31SS14A	Coil Bridge Setscrew - 5/16"-24x7/8"	2	2	2	2	2
18	FV2480	Rotor	1	1	1	1	1
19	A2492A	Seal Outer Washer	1	1	1	1	1
20	A2492C	Seal Inner Washer	1	1	1	1	1
21	H2498	End Cap Gasket	1	1	1	1	1
22	D2499A	Wire Assembly	-	-	-	-	1
23	J2499A	Wire Assembly	1	1	1	1	-
24	A2513B	Switch Spring	-	-	-	-	1
25	D2514	Switch Lever	1	1	1	1	-
26	E2514	Switch Button	-	-	-	-	1
27	A2514D	Switch Complete	-	-	-	-	1
28	L2514C	Switch Complete	1	1	1	1	-
	6S9N	Switch Screw - #6-32x9/16"	-	-	-	-	1
	8S14N	Switch Screw - #8-32x7/8"	1	1	1	1	-
	8SW5	Switch Lockwasher	1	1	1	1	-
	6N1	Switch Nut	-	-	-	-	1
	8N1	Switch Nut	3	3	3	3	-
29	EY2563	Hub Assembly	-	-	-	-	1
30	WY2563	Hub Assembly	1	1	1	1	-
31	HV2563C	Coupling Complete	-	-	-	1	-
32	ZV2563C	Coupling Complete	-	1	-	-	-
33	DZ2563C	Coupling Complete	1	-	1	-	-
34	EZ2563C	Coupling Complete	-	-	-	-	1
35	D2565	Coupling Spring	-	-	-	1	1
36	E2565	Coupling Spring	1	1	1	-	-
37	A2568	Pawl Stop Pin	1	1	1	1	-
38	B2568	Pawl Stop Pin	-	-	-	-	1
39	S2568	Pawl Stop Pin	1	1	1	1	-
40	M2570	Coupling Nut	1	1	1	1	1
41	F2572	Gear Bushing	1	1	1	-	1
42	K2572	Gear Bushing	-	-	-	1	-
43	B2665K	Coupling Washer	1	1	1	1	1
44	C2723	Bearing Shim	2	2	2	2	2
45	G2788	Cam Wick	1	1	1	1	-
46	H2788	Cam Wick	-	-	-	-	1
47	G3861	Shaft Seal	1	1	1	1	1
48	B3967	Coil Lead Spring	2	2	2	2	2
49	B4466	Switch Nut	-	-	-	-	1
50	V4631	Bearing Support	1	1	1	1	-
51	W4631	Bearing Support	-	-	-	-	1
	8S6G	Support Screw - #8-32x3/8"	4	4	4	4	4
52	C5949	Drive End Bearing	1	1	1	1	1
53	A5950A	Cam End Bearing	1	1	1	1	1
54	N5957	Coupling Shell	-	-	-	1	-
55	Y5957	Coupling Shell	1	-	1	-	-
56	DX5957	Coupling Shell	-	-	-	-	1
57	AZ5957	Coupling Shell	-	1	-	-	-
58	C5963	Pawl Spring	1	1	1	1	-
59	N5963	Pawl Spring	-	-	-	-	1
60	B5969	Support Washer - #8	1	1	1	1	1
61	C6018	Insulating Washer	2	2	2	2	-
62	K6018	Insulating Washer	-	-	-	-	2
63	L6018	Terminal Insulator	-	-	-	-	1
64	B6030A	Vent Cover	2	2	2	2	2
	6S4L	Vent Screw - #6-32x1/4"	2	2	2	2	2
65	C6032B	Vent Screen	2	2	2	2	2
66	3K1	Key	1	1	1	1	1