FAIRBANKS MORSE
A MAJOR INDUSTRIAL COMPONENT OF
FAIRBANKS WHITNEY

SERVICE INFORMATION
REPLACEABLE COUPLING PAWL

MAGNETO and ENGINE ACCESSORIES DIVISION • BELOIT, WISCONSIN

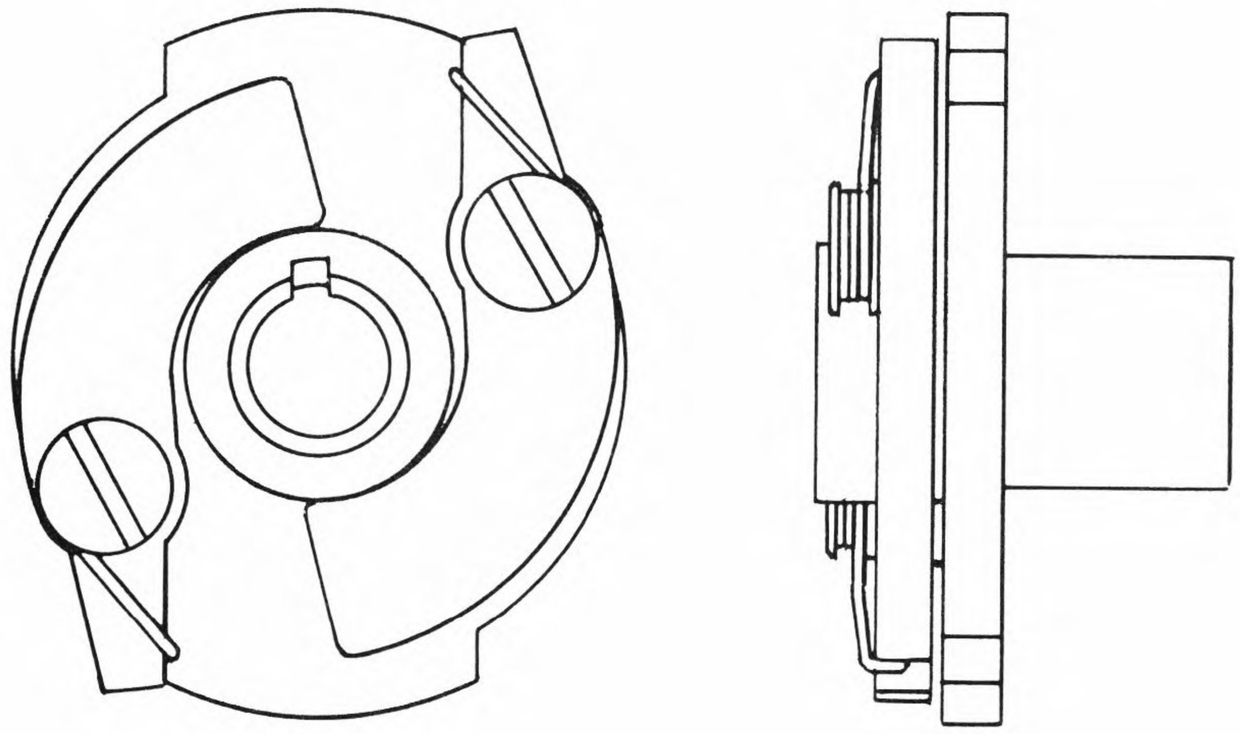

Stationary Pawl Type Coupling Hub

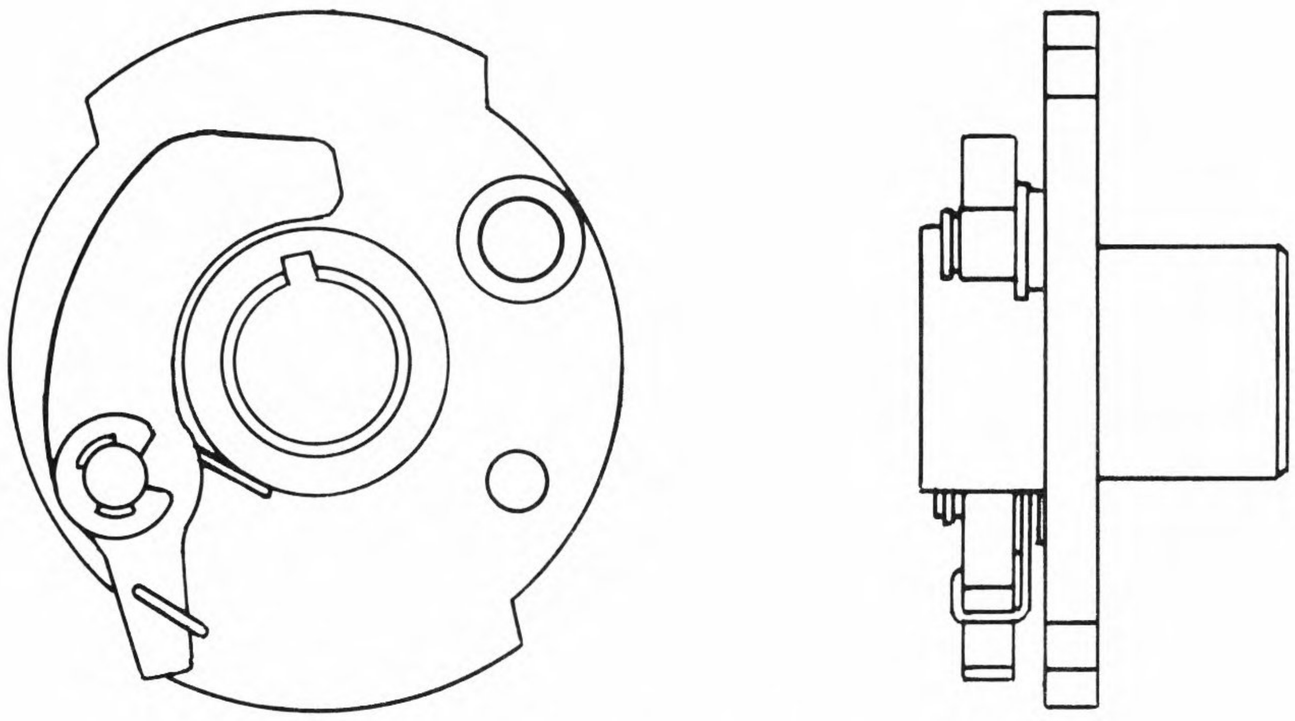

Replaceable Pawl Type Coupling Hub

A newly designed impulse coupling hub with replaceable pawl and snap ring is now standard on all types of magnetos.

The change involves a new headless pawl rivet that is brazed into the hub plate for positive holding. With this new rivet, the coupling pawl can be replaced without replacing the entire hub.

Coupling pawl is held in position by a heavy duty "E" type snap ring that fits the groove in the rivet for proper pawl setting and tolerance. Replacement of the pawl spring is not affected by this change.

The view of the newly designed coupling hub shown above is for a CW rotation magneto. A coupling for a CCW rotation magneto would use the same parts, but with the pawl positioned differently in the hub plate and the parts in reverse position.

When ordering coupling parts, be sure to specify part number, rotation and lag angle.