Instructions No. 2867A

Supersedes Instructions No. 2867

FAIRBANKS-MORSE

FAIRBANKS-MORSE TYPE FM-JE4 MAGNETOS FOR RADIO-SHIELDED APPLICATIONS

Also Applies to Type FM-JFE2 Magnetos

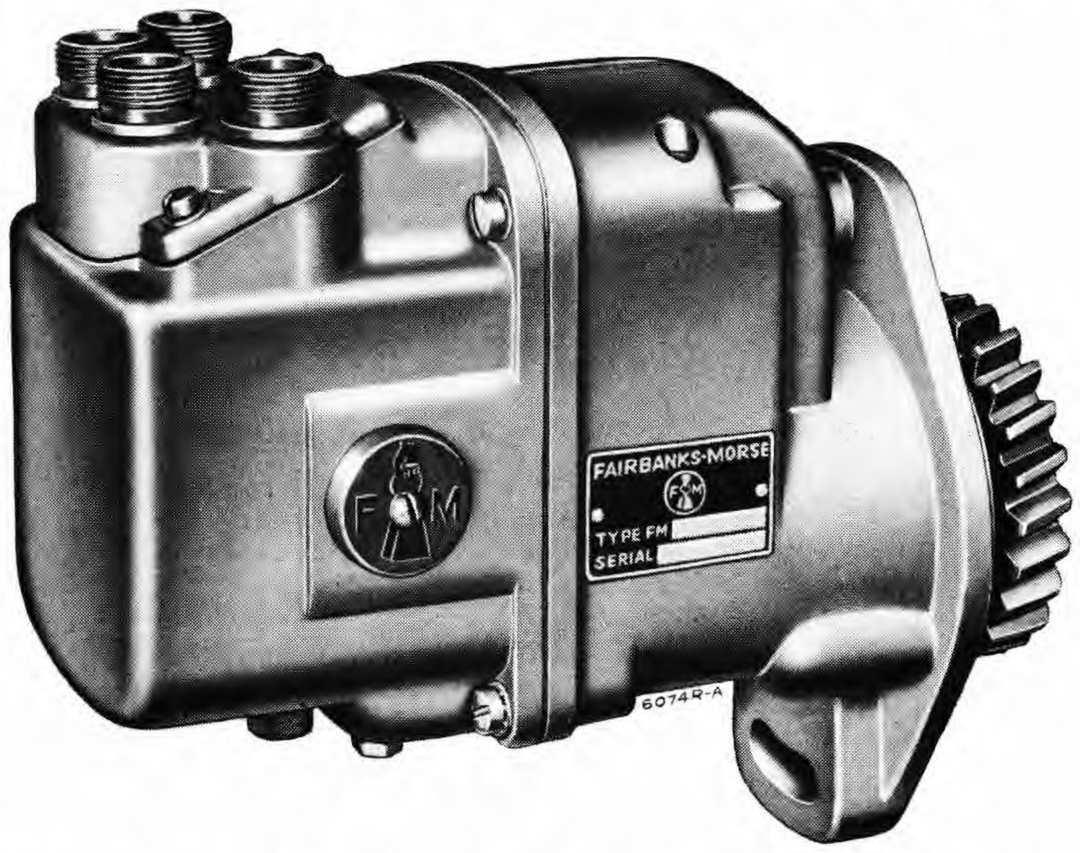

Field Service and Adjustment Information

APPLICATION

Type FM-JE4 magnetos are built for operation on standard four cylinder engines which require complete radio shielding of the ignition system. Radio shielding of the magneto is accomplished by enclosing the entire unit in a grounded metal frame equipped with special vents. Threaded bushings are provided for connection to the flexible, woven metal sheaths which are used to shield the high tension lead cables. The primary ground terminal is also arranged for connection to a shielded cable on installations requiring a remote control switch.

TESTING THE IGNITION SPARK

With properly adjusted spark plugs in good condition, the ignition spark should be strong enough to bridge a short gap in addition to the actual spark plug discharge. This may be determined by removing the upper half of the spark plug radio shield and holding the ignition cable end not more than 1/16 in. away from the spark plug terminal. The engine should not misfire when this is done.

TESTING THE MAGNETO SPARK

Disconnect each high tension cable from its respective spark plug and lay the cables on the engine block adjacent to their respective spark plugs to insure proper replacement. With the terminals 1/8 in. from the engine block, slowly turn the engine over two complete revolutions and watch carefully for a spark discharge which should occur every time the impulse coupling releases. If a strong spark is observed between one of the terminals and the engine block each time the coupling releases, it is recommended that the magneto and all its connections be eliminated as the source of difficulty. If strong sparks are observed from only one, two, or three of the terminals, a defective high tension cable is indicated. Remove the questionable cable from its socket. This may be done by unscrewing the high tension cable outlet nut in the end cap cover. Insert a short, stiff wire in the socket and bend this wire to within 1/8 in. of the engine block. Turn the engine over slowly two revolutions and watch for the spark which should occur once during the cycle. A strong spark indicates a defect in the high tension cable for that outlet.

SERVICE OF BREAKER POINTS

Remove the high tension cables as described in the previous paragraph and take the end cap off the frame by removing the four end cap screws. Examine first the carbon brush in the center of the distributor block, and replace it if noticeably worn or damaged. This brush should move freely in its holder and should be under slight spring pressure. Clean the screens in the vents. Inspect the breaker points for evidence of pitting or pyramiding. A small tungsten file or fine stone may be used to resurface the points except in the case of badly worn or pitted points, which should be replaced. If it is necessary to resurface or replace the breaker points, it will also be necessary to adjust them to their proper clearance, which is 0.020 in. at full separation. This adjustment is made in the following manner: With the breaker arm riding the high part of the cam, or one of the lobes, loosen the contact support locking screw very slightly and turn the eccentric head adjusting screw until the proper gap is obtained. Then tighten the locking screw and take a final measurement of the breaker point gap after the screw is tightened. Oil film can be removed from the breaker points by using a small stiff brush and a small quantity of petroleum solvent.

FURTHER FIELD SERVICE NOT RECOMMENDED

In general, it is recommended that difficulties due to the coil, condenser, or other causes be investigated by a Fairbanks-Morse Authorized Service Station, which

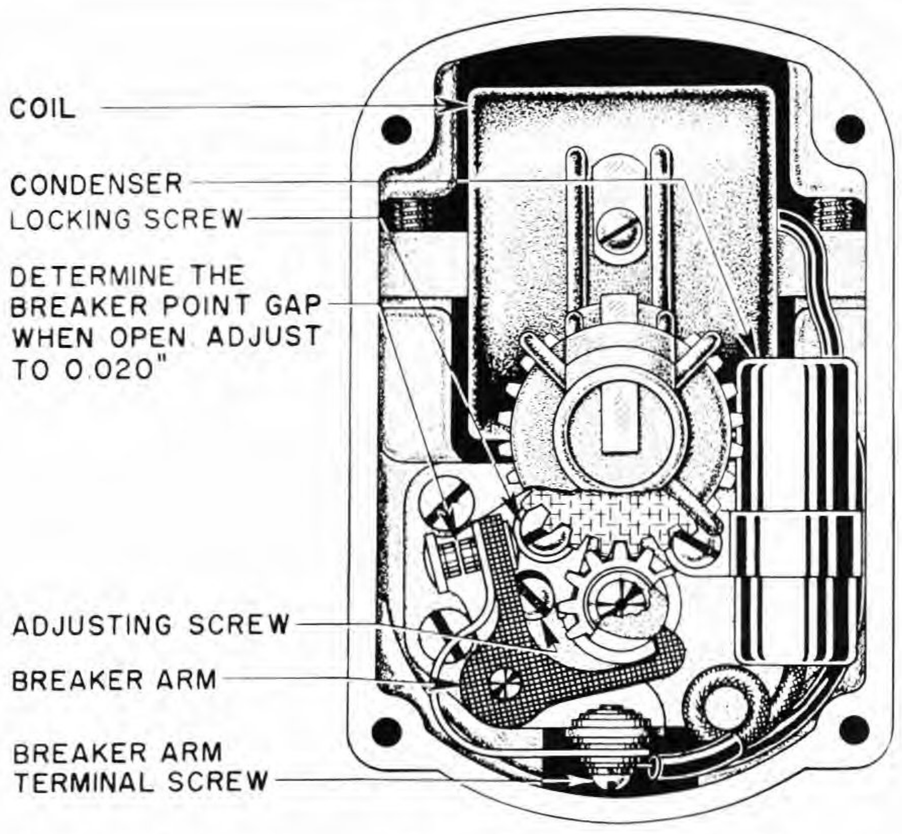

Fig. 1. End View, Types FM-JFE2 and FM-JE4 Magnetos

has the necessary equipment for effective service. In emergencies either the coil or condenser can be replaced in the field without special tools. To remove the coil from the magneto the magnetic rotor gear must first be taken off the shaft, after which the bearing plate can be removed. The setscrews holding the coil lamination assembly should then be loosened and the coil pulled out of the frame. The magnetic rotor is locked in the special drive end thrust ball bearing and cannot be pushed or driven from the frame without first releasing the rotor shaft. Removal of the magnetic rotor is described in Bulletin FM71B.

It is also recommended that no attempt be made to oil or grease the bearings except during complete disassembly and overhaul by an Authorized Service Station. Type FM-JE4 magnetos are designed to operate for long periods of time without field lubrication.

INTERNAL TIMING

If the magnetic rotor gear and the distributor gear have become disengaged, they must be made to mesh properly during reassembly of the magneto. The rotation of the magneto must first be ascertained; this can be quickly determined by referring to Fig. 2. Rotation is clockwise when the condenser is mounted to the right of the magnetic rotor gear and counterclockwise when mounted to the left. The breaker point assembly also changes location, but for simplification this has been blocked out in the drawing. The gear teeth are marked

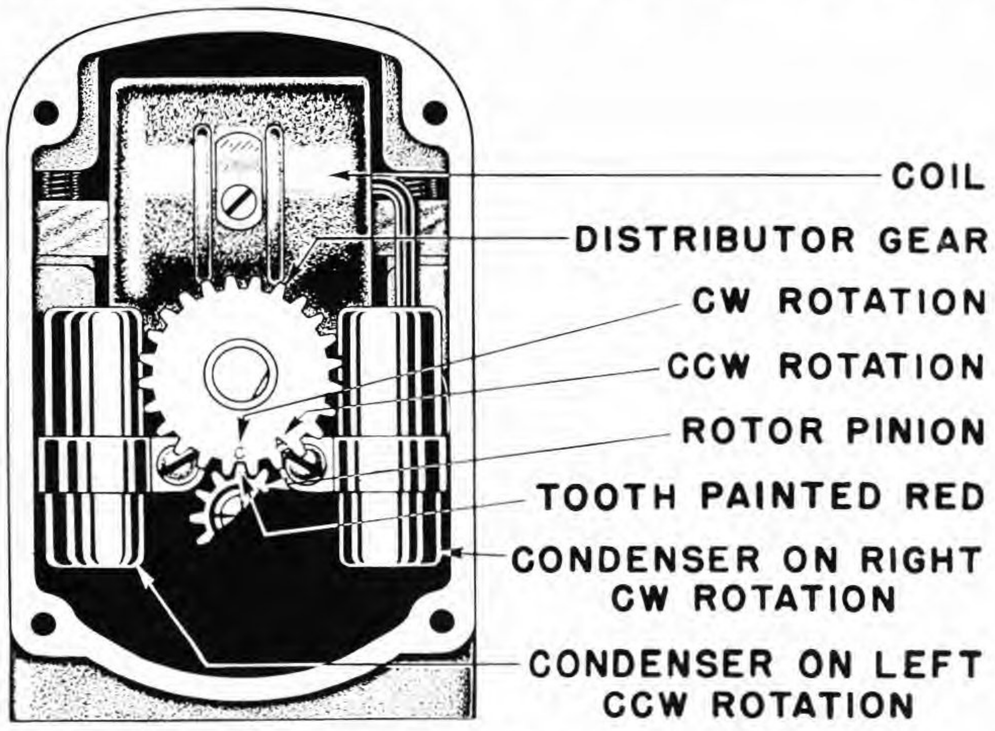

Fig. 2. Internal Timing.

to facilitate correct meshing for either rotation. For clockwise rotation the single marked tooth of the magnetic rotor gear must mesh between the two marked teeth of the distributor gear designated by the letter C. For counterclockwise rotation, the marked tooth of the rotor gear must mesh between the two marked teeth of the distributor gear designated by the letter A.

SPECIAL DRIVE GEAR

The Type FM-JE4B26 magneto, as adapted to Climax and Waukesha ICK engines, is equipped with a special drive gear, mounted on the magnetic rotor shaft and locked in place by the drive lugs of the impulse coupling shell. The drive gear is a slip fit on the coupling nut, since movement of the gear with respect to the coupling nut and rotor shaft occurs during the impulse period. If the gear has been removed, it is necessary to exercise care in reassembly, since both gear and coupling are symmetrical. See Fig. 3.

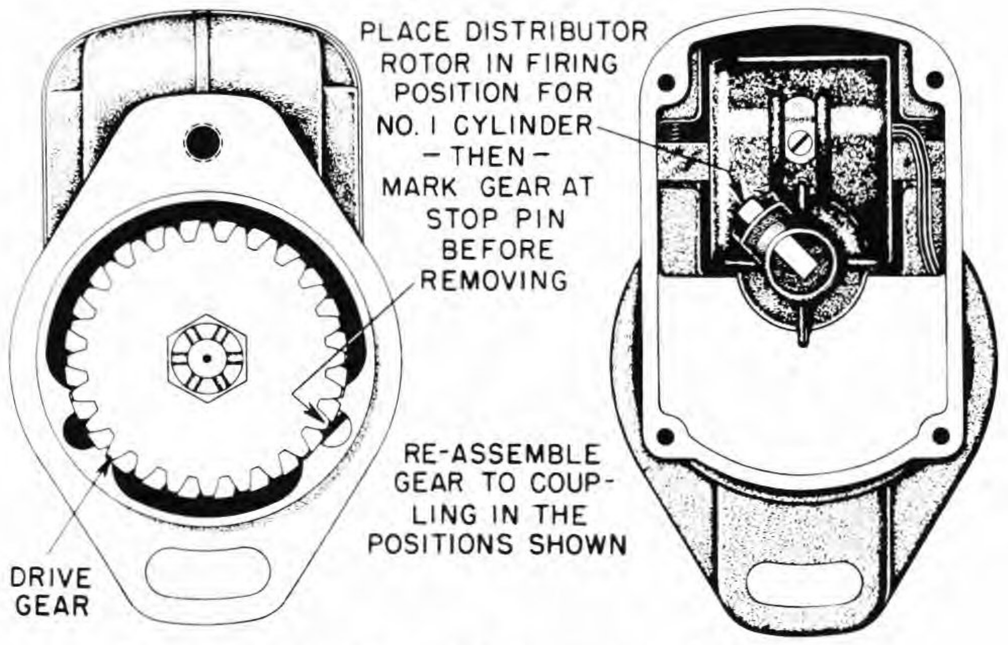

Fig. 3. Drive Gear Marking and Assembly.

TIMING MAGNETO TO ENGINE

Proper timing of the magneto to the engine provides an ignition spark in each cylinder at the exact instant that the fuel mixture in the cylinder should be ignited for best engine performance. Nearly all engines are marked for such timing according to careful determination made by the engine designers. Refer to the engine instruction book for details concerning the timing marks of your particular engine.

A close approximation of the correct timing may be obtained by cranking the engine until the piston in No. 1 cylinder reaches top dead center on its compression stroke, turning the magneto by hand until a spark is obtained from the No. 1 socket, and then coupling the magneto to the engine without changing these positions.

COUPLING MAGNETO TO ENGINE

Flange mounting magnetos are coupled to the engine by engaging the drive lugs of the impulse coupling with the driving slots of the engine drive member. A slight movement of the engine flywheel may be necessary to secure accurate alignment.

Base mounting magnetos are coupled to the engine by engaging the drive lugs of the impulse coupling with the drive slots of the float disc. The shaft assembly must be accurately aligned before securing the base mounting screws.

ADJUSTABLE DRIVE MEMBERS

Most engines using base mounting magnetos are equipped with adjustable drive members. Ordinarily the position of the drive member is not altered when removing the magneto, but when necessary, the drive collar nut L in Fig. 5 can be loosened to permit movement of the engine drive shaft to which collar K is keyed. The

drive member slots can then be turned to line up with the impulse coupling lugs, after which the nut L should be tightened. The locking lugs M of the washer should be turned up around the nut to prevent its coming loose.

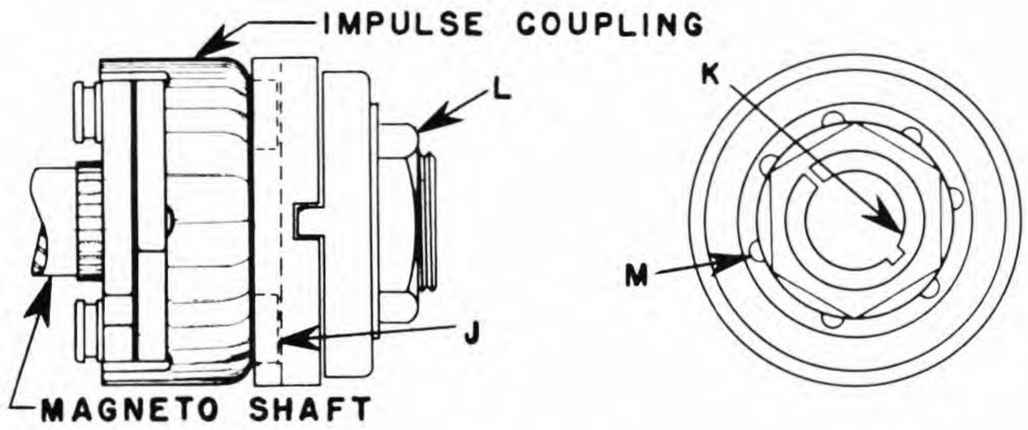

Fig. 4. Drive Member for Base Mounting Magneto.

ADAPTATION TO TWO CYLINDER ENGINES

Application to two cylinder engines firing at 360° intervals is made by installing a magnetic rotor with a one-lobe cam, using an impulse coupling with only one pawl, and using alternate outlets on the distributor block. When modified in this manner the magneto assumes the specification FM-JFE2. Service and adjustment information in the preceding paragraphs apply to these units, but Fig. 6 gives the location of the high tension cables. Standard two cylinder 360° units use outlets B and D for clockwise rotation and A and C for counterclockwise rotation. The special Type FM-JFE2B69, adapted to Onan engines, uses outlets B and D for counterclockwise rotation.

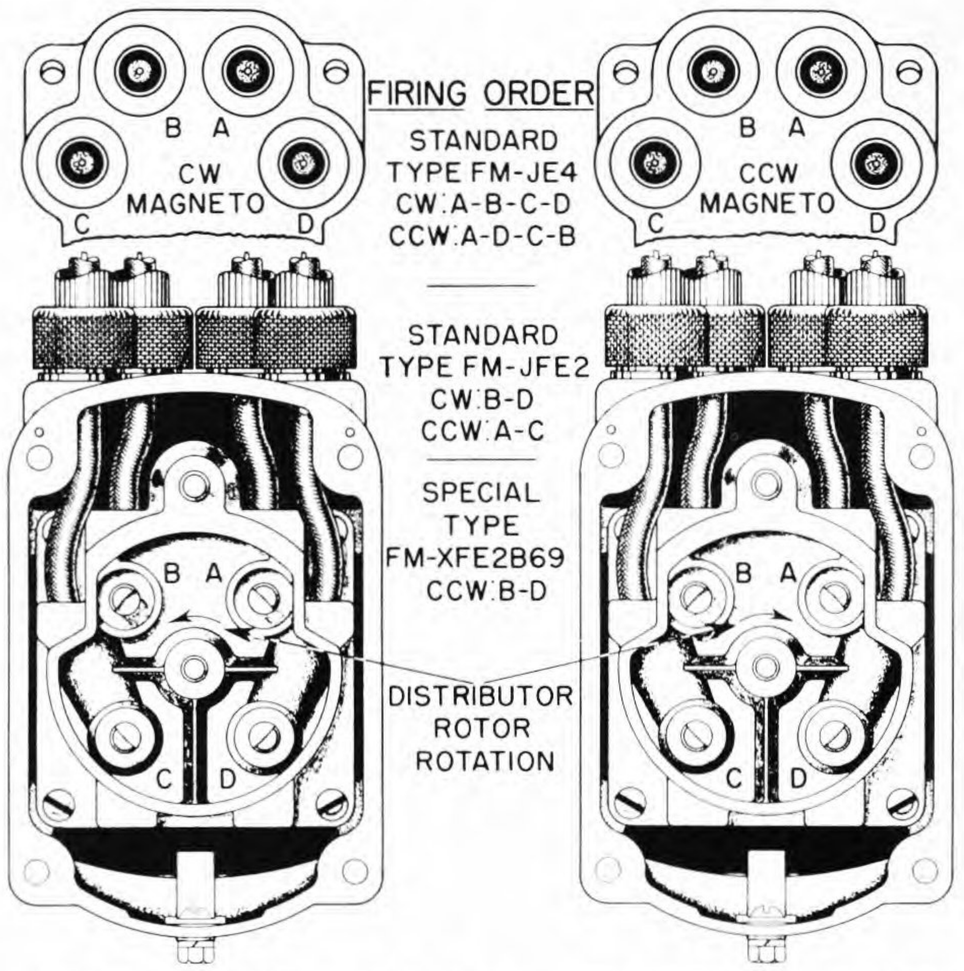

Fig. 5. Cable Outlets for Types FM-JFE2 and FM-JE4 Magnetos.

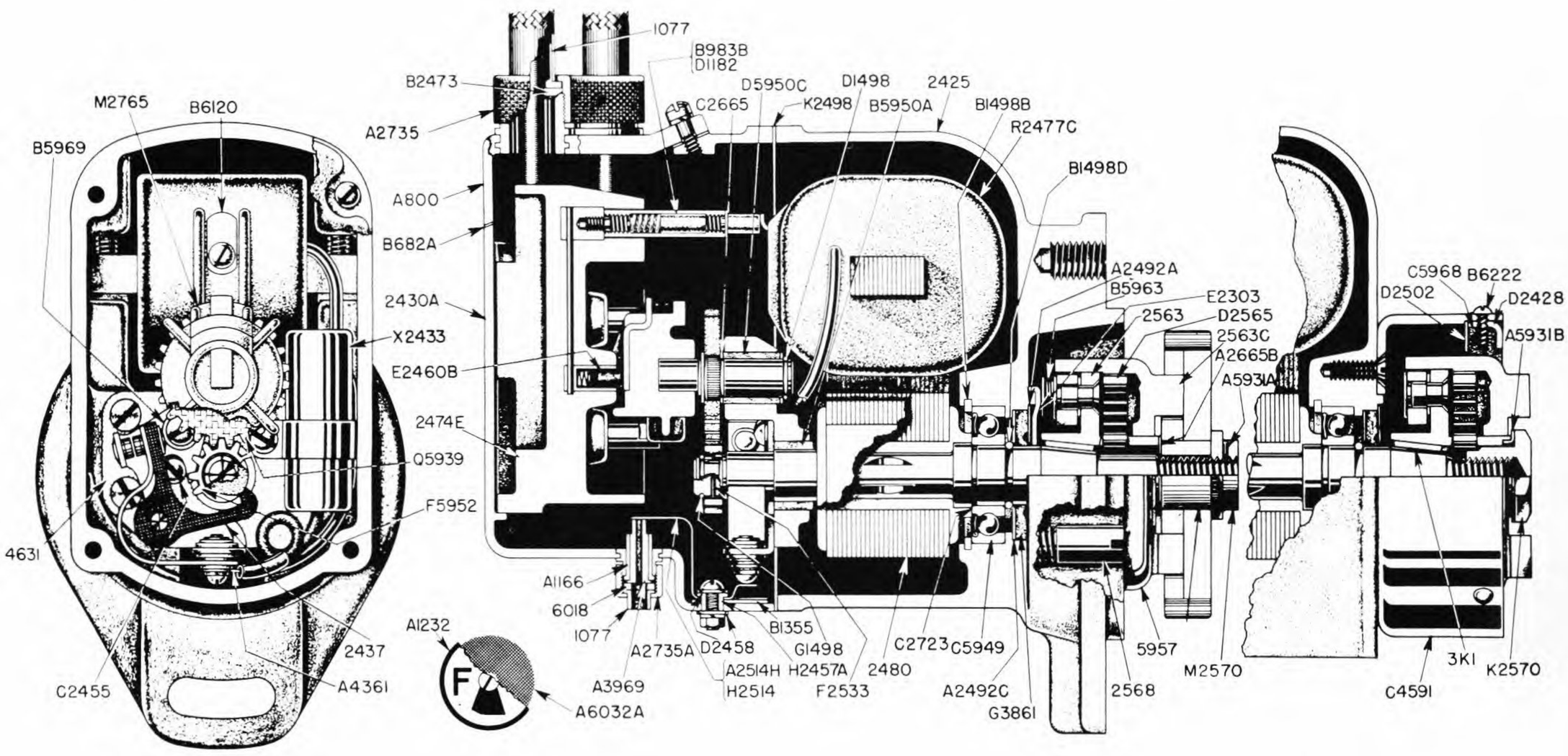

REPAIR CHART, TYPE FM-JE4 MAGNETO

Parts List on Page 4

Order by Part No.	Name of Part	No. Used
B682A	End Cap Cover Gasket	1
A800A	End Cap Cover	1
A800B	End Cap Cover (CW, FM-JFE)	1
A800D	End Cap Cover (CCW, FM-JFE2B69)	1
8S6D	End Cap Cover Screw (#8-32x$\frac{3}{8}$")	3
B983B	Interference Suppressor Lead Rod Assembly (B983B inc. D1182)	1
A1077B	High Tension Cable Ferrule	4
B1077	Primary Ground Cable Ferrule	1
C1077	Primary Ground Cable Ferrule (FM-JE4B8)	1
L1077	High Tension Cable Ferrule (FM-JE4A30A)	4
A1166	Primary Ground Cable Terminal Insulator	1
D1182	Suppressor Insulating Tube	1
A1232	Vent Hood	2
6S6N	Vent Hood Screw (#6-32x$\frac{3}{8}$")	2
B1355	Primary Ground Switch Strip Guide	1
B1498B	Magnetic Rotor Drive End Bearing Snap Ring	1
B1498D	Magnetic Rotor Drive End Shaft Snap Ring	1
D1498	Distributor Shaft Snap Ring	1
G1498	Magnetic Rotor Gear Snap Ring	1
E2303	Oil Slinger Baffle Disc	1
AX2425	Frame (Flange Mounting)	1
PX2425	Frame (FM-JE4A14)	1
QX2425	Frame (Base Mounting)	1
D2428	Coupling Outer Shell Cupped Washer (Base)	1
F2430A	End Cap	1
G2430A	End Cap (FM-JE4B16A)	1
H2430A	End Cap (FM-JFE2B69B)	1
10S10D	End Cap Screw (#10-24x$\frac{5}{8}$")	2
10S18D	End Cap Screw (#10-24x1$\frac{1}{8}$")	2
X2433	Condenser	1
8S5N	Condenser Mounting Screw (#8-32x5/16")	1
8LW3	Condenser Mounting Screw Lockwasher (#8)	1
R2437	Breaker Arm, Support Bracket & Points (CW)	1
S2437	Breaker Arm, Support Bracket & Points (CCW)	1
8S5N	Breaker Arm Terminal Screw (#8-32x5/16")	1
8LW5	Breaker Arm Terminal Screw Lockwasher (#8)	1
8S5N	Contact Support Locking Screw (#8-32x5/16")	1
8LW3	Contact Support Locking Screw Lockwasher	1
C2455	Contact Support Adjusting Screw	1
H2457A	Primary Ground Screw Bushing	1
D2458	Primary Ground Screw Washer	2
E2460B	Brush and Spring Assembly	1
B2473	High Tension Cable Outlet Rubber Seal	4
B2474E	Distributor Block	1
F2474E	Distributor Block (FM-JE4B16A, FM-JE4A30B)	1
8S8N	Distributor Block Screw (#8-32x$\frac{1}{2}$")	4
8LW3	Distributor Block Screw Lockwasher (#8)	4
R2477C	Coil (R2477C inc. B6120, 6S3W)	1
25SS12A	Coil Bridge Setscrew ($\frac{1}{4}$-20x$\frac{3}{4}$")	2
CX2480	Magnetic Rotor Assembly (FM-JE4)	1
EX2480	Magnetic Rotor Assembly (FM-JE4B8A)	1
EY2480	Magnetic Rotor Assembly (FM-JE4A44A)	1
HX2480	Magnetic Rotor Assembly (FM-JFE2)	1
NV2480	Magnetic Rotor (FM-JE4, No. 6 Alnico)	1
A2492A	Magnetic Rotor Drive End Seal Outer Washer	1
A2492C	Magnetic Rotor Drive End Seal Inner Washer	1
K2498	End Cap to Frame Gasket	1
D2502	Coupling Outer Shell Flat Washer (Base)	1
A2514H	Primary Ground Switch Assembly (A2514H inc. B1355, H2457A, D2458, H2514, 6S6N, 6N1, 6LW1)	1
H2514	Primary Ground Strip	1
6S6N	Primary Ground Screw (#6-32x$\frac{3}{8}$")	1
6N1	Primary Ground Nut (#6-32)	1
6LW1	Primary Ground Lockwasher (#6)	1
F2533	Magnetic Rotor Gear Pin	1
Q2563	Impulse Coupling Hub (CW)	1
Q2563C	Impulse Coupling Assembly (UB, CW) (Q2563C inc. Q2563, D2565, N5957)	1
R2563	Impulse Coupling Hub (CCW)	1
R2563C	Impulse Coupling Assembly (UBL, CCW) (R2563C inc. R2563, D2565, M5957)	1
T2563C	Impulse Coupling Assembly (UA, CW) (T2563C inc. Q2563, D2565, Q5957)	1
U2563C	Impulse Coupling Assembly (UAL, CCW) (U2563C inc. R2563, D2565, P5957)	1
D2565	Impulse Coupling Drive Spring	1
A2568	Impulse Coupling Pawl Stop Pin (CW, UB)	1
B2568	Impulse Coupling Pawl Stop Pin (CCW, UB)	1
K2570	Impulse Coupling Nut	1
M2570	Coupling Nut (For use with drive gears)	1
P2570	Impulse Coupling Nut (FM-JE4B8)	1
A2665B	Impulse Coupling Nut Spacer Washer	1
C2665	Distributor Gear Flat Washer	1
C2723	Magnetic Rotor Drive End Shim (as needed)	2
A2735	High Tension Cable Outlet Nut	4
A2735A	Primary Ground Cable Nut	1
M2765	Distributor Rotor	1
G3861	Magnetic Rotor Drive End Seal	1
A3969	Primary Ground Cable Terminal	1
A4361	Lead Wire Terminal for No. 8 Screw	2
C4591	Coupling Outer Shell (Base)	1
25S6G	Coupling Outer Shell Screw ($\frac{1}{4}$-20x$\frac{3}{8}$")	4
M4631	Bearing Support Assembly (CW)	1
N4631	Bearing Support Assembly (CCW)	1
8S6G	Bearing Support Screw (#8-32x$\frac{3}{8}$")	4
A5931A	Impulse Coupling Nut Lockwire	1
A5931B	Impulse Coupling Nut Lockwasher	1
Q5939	Distributor Gear Assembly	1
F5952	Magnetic Rotor Gear	1
C5949	Magnetic Rotor Drive End Bearing	1
B5950A	Magnetic Rotor Bearing (Opp. Drive End)	1
D5950C	Distributor Bearing	1
M5957	Impulse Coupling Shell (UBL, CCW)	1
N5957	Impulse Coupling Shell (UB, CW)	1
P5957	Impulse Coupling Shell (UAL, CCW)	1
Q5957	Impulse Coupling Shell (UA, CW)	1
B5963	Impulse Coupling Pawl Spring	2
C5968	Coupling Outer Shell Felt Washer (Base)	1
B5969	Contact Support Locking Screw Washer	1
A6018	Primary Ground Cable Insulating Washer	1
A6032A	Vent Screen	2
B6120	Coil Clip	1
6S3W	Coil Clip Screw (#6-32x3/16")	1
B6222	Outer Shell to Cupped Washer Screw (Base)	2
3K1	Key (Rotor to Impulse Coupling)	1

FAIRBANKS, MORSE & CO.

Manufacturers

Executive Offices
Chicago, Illinois

339452-105510M-BL

Magneto Sales & Factory
Beloit, Wisconsin

PRINTED IN U.S.A.