Instructions No. 2833A

Supersedes Instructions No. 2833

FAIRBANKS-MORSE

TYPES FM-K4A AND FM-K4B MAGNETOS

Field Service and Adjustment Information



Type FM-K4A

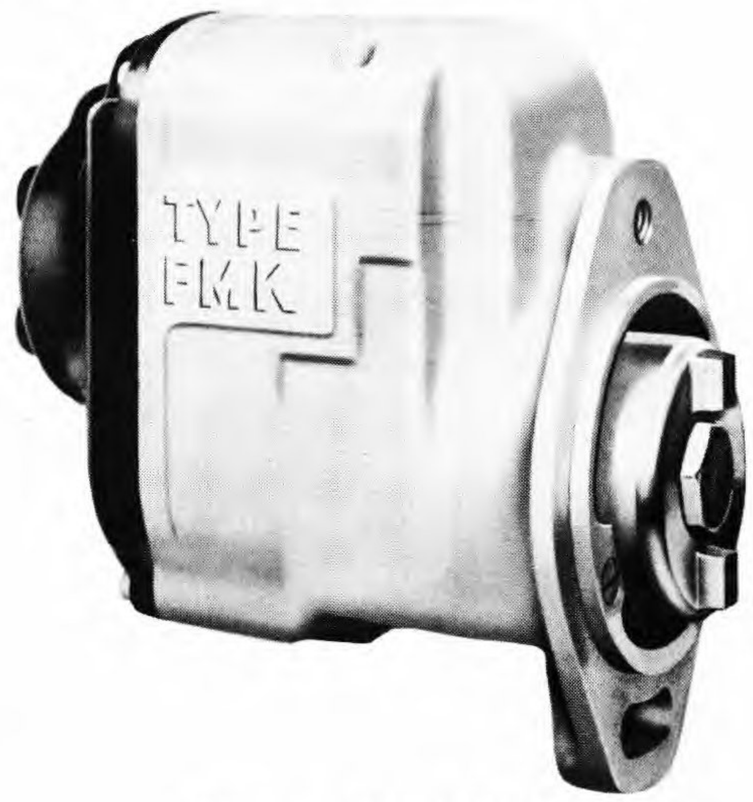

Type FM-K4B

GENERAL

Improper functioning of the magneto is often believed to be the cause of much engine trouble arising from other sources. The service chart below gives a logical procedure to follow when an engine fails to start, is hard to start, or misses in operation. Since the use of this table locates the trouble in many cases before the magneto is reached, it prevents all-too-common maladjustment of parts in good condition. It is suggested that the magneto be opened only when it is certain that the ignition spark produced is unsatisfactory. This condition may be determined by simple tests which are easily made in the field.

TESTING THE MAGNETO SPARK

Remove all the ignition cables from the magneto end cap sockets and insert a short, stiff wire in one of the sockets. Bend this wire to within 1/8 in. of the engine block. Turn the engine over slowly two complete revolutions and watch carefully for the spark discharge which should occur once during the cycle at the instant the impulse coupling releases. Repeat this test with the wire in each of the other sockets. If a strong spark is observed with the wire in each socket, it is highly recommended that the magneto be eliminated as the source of difficulty and that the cables, terminals, and spark plugs be thoroughly inspected. If no spark occurs, the ignition switch should be examined to make certain it has not accidentally become closed.

DISTRIBUTOR COVER REMOVAL

If no spark is obtained from one or more of the magneto terminals, take off the distributor end cap by removing the four end cap screws. Then check the following details:

(a) Inspect the carbon brushes. These brushes should move freely in their holders and should be under slight spring pressure. Replace brushes which are worn or irregular.

(b) Clean the distributor disc with a clean cloth and carbon tetrachloride. Do not use sandpaper.

SERVICE OF BREAKER POINTS

Carefully examine the breaker points for evidence of pitting or pyramiding. A small tungsten file or fine stone may be used to resurface the points except in the case of badly worn or pitted points, which should be replaced. The entire breaker mechanism may be easily removed from the magneto frame, eliminating the possibility of dropping filings in the housing. If it is necessary to resurface or replace breaker points, it will also be necessary to readjust them to their proper clearance, which is 0.020 in. at full separation. This adjustment is made by loosening the two locking screws (Fig. 1) of the stationary point bracket, turning the eccentric head adjusting screw until the proper position has been obtained, and locking the assembly in place by tightening the locking screws. A final measurement of the breaker point gap should be made after the locking screws are tightened.

TROUBLE	POSSIBLE CAUSE	SUGGESTED REMEDY
A. Flooding	Hot or cold engine; over-rich fuel mixture.	Dry out cylinders. Crank engine slowly with fuel shut off; or let engine stand idle for a short time.
B. Insufficient fuel or air	Empty fuel tank; clogged fuel supply lines; clogged air intake.	Replenish fuel supply. Clean fuel system and check carburetor. Clean air intake system.
C. Ignition connections	Loose or corroded terminals; broken cables; short circuited switch.	Clean or replace cable terminals. Inspect soldered or clamped joints. Test and replace cables. Check ignition switch.
D. Spark plugs	Corroded, worn or damaged points; cracked or carbonized insulators.	New plugs. Clean points and insulators. Adjust points to recommended opening. Never attempt to adjust center electrode.
E. Magneto	Points, impulse coupling.	See instructions beginning "Testing the Magneto Spark".

Instructions No. 2833A
September 15, 1948

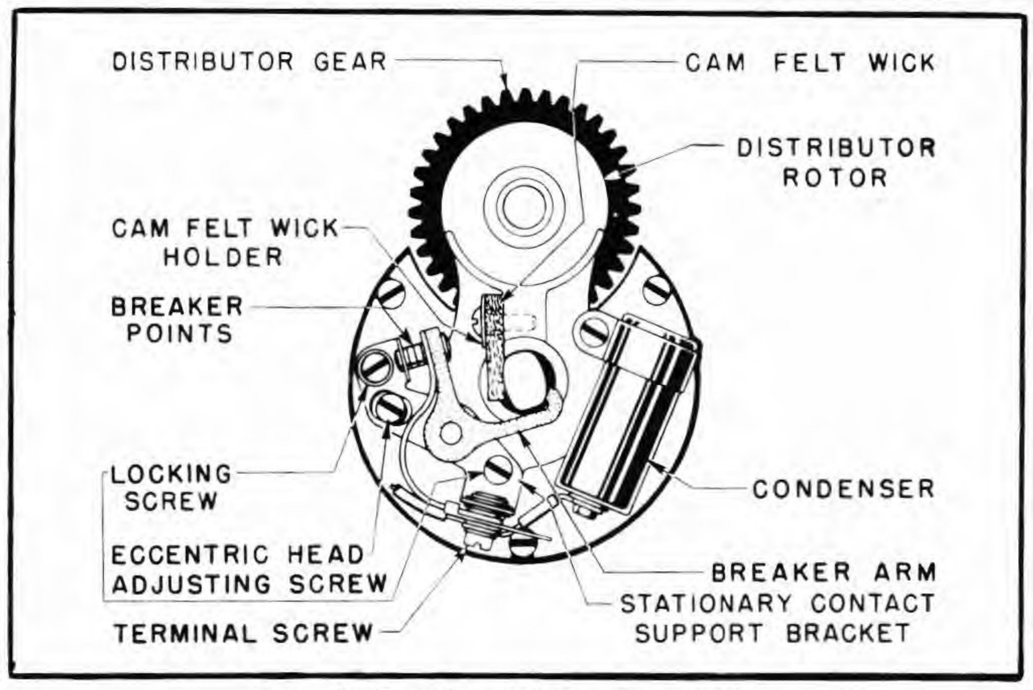

Fig. 1. Breaker Plate Assembly.

LUBRICATION

The cam felt wick, if dry or hard, should be replaced by a new factory-impregnated wick. Other than this, Types FM-K4 magnetos do not require field lubrication and any attempt to oil or grease the bearings is inadvisable. The ball bearing is packed with the finest grade of high melting point grease (FMC03), and the porous oilite sleeve bearings are mounted in bearing supports which include reservoirs containing an additional quantity of a particularly suitable grease (FMC04). These lubricants should be renewed only during a complete overhaul of the magneto by a Factory-Authorized Magneto Service Station.

REASSEMBLY AND SEALING

Before replacing the distributor end cap on the magneto frame, clean the contact surfaces between the cap and the frame. Then coat both contact surfaces completely with Fairbanks-Morse FMC02 Gasket Varnish, place a new gasket in the joint, and mount the end cap on the frame, tightening the four screws securely. Test the magneto again as explained above, and if no spark occurs, send the magneto to a Factory-Authorized Magneto Service Station.

MAGNETO-TO-ENGINE TIMING

If the magneto has been removed from the engine, replacement necessitates accurate retiming. Retiming the FM-K4 magneto to the engine is best accomplished by means of the impulse coupling trip method. This method consists of setting the magneto for the impulse, or retarded spark to the No. 1 cylinder, turning over the engine until the piston in the No. 1 cylinder is at top center at the end of its compression stroke, and coupling the two together. Specifically, the procedure is as follows:

A. Magneto

Place a piece of short, stiff wire in the No. 1 socket of the magneto end cap and bend it to within 1/8 in. of the magneto frame. Turn the rotor from the impulse coupling end in its normal direction of rotation until a spark is observed between the wire and the frame. Hold the coupling in the position in which the trip occurred.

B. Engine

Remove the spark plug, or otherwise determine top dead center for the piston in the No. 1 cylinder. Then turn the engine over until this position is reached, being certain that the piston is just at the end of its compression stroke.

C. Coupling Magneto to Engine

Without disturbing the setting of either magneto or engine as determined above, couple the magneto to the engine in the following manner:

(1) Flange Mounting Magnetos

Engage the drive lugs of the impulse coupling with the driving slots of the engine drive member. A slight movement of the engine flywheel may be necessary to secure accurate alignment. Tighten capscrews and nuts securely.

(2) Base Mounting Magnetos

If no change has been made in the position of the drive member, it is necessary only to engage the drive lugs of the impulse coupling with the drive slots of the float disc. Be sure that the shaft assembly is in accurate alignment before securing the base mounting screws.

ADJUSTABLE DRIVE MEMBERS

Most engines using base mounting magnetos are equipped with adjustable drive members. Ordinarily the position of the drive member is not altered when removing the magneto, but when necessary, the drive collar nut L (See Fig. 2) can be loosened to permit relative movement of the engine drive shaft in collar K. The drive member slots J can then be turned for alignment with the impulse coupling lugs, after which the nut L should be tightened. The locking lugs M of the washer should be turned up around the nut to prevent its becoming loose.

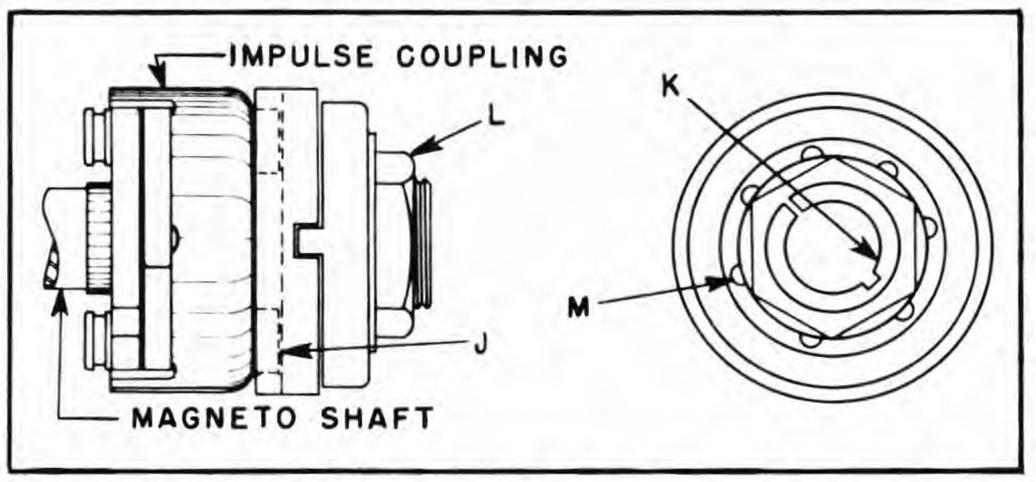

Fig. 2. Drive Member for Base Mounting Magnetos.

IMPULSE COUPLING

The impulse coupling is used to facilitate starting of the engine by automatically retarding the ignition spark during the starting operation and at the same time producing an intense, hot spark which would otherwise be impossible at very low engine speeds. By means of this device the rotor of the magneto is prevented from turning during the starting operation until the piston in the engine is approximately at top dead center, at which instant the rotor is snapped forward at very high speed, producing an intense spark which is automatically retarded to prevent backfiring. The impulse feature disengages as soon as the engine develops speed, after which the coupling serves as a conventional drive member. A characteristic snap as the impulse coupling releases usually indicates that it is functioning satisfactorily. Couplings may be cleaned in kerosene and lubricated with a medium engine oil, but if functioning improperly they should be taken, together with the magneto, to an Authorized Fairbanks-Morse Magneto Service Station.

MAGNETO SERVICE FACILITIES

Authorized Fairbanks-Morse Magneto Service Stations, located throughout the United States and foreign countries, have been carefully selected by Fairbanks, Morse & Co. to insure highly efficient and complete repair service to owners of Fairbanks-Morse magnetos. These service stations, which are specially equipped for magneto repair and manned by highly-trained personnel, maintain close contact with the factory service and engineering departments. The station most convenient may be located by use of Bulletin FM18D, which is available upon request.

Genuine Fairbanks-Morse magneto replacement parts, which may be obtained from all Authorized Service Stations, should always be insisted upon for repairs. The use of spurious parts usually proves less satisfactory and economical, in addition to voiding the manufacturer's guaranty.

FAIRBANKS, MORSE & CO.
Manufacturers

Executive Offices:
Chicago, Illinois

Magneto Sales & Factory:
Beloit, Wisconsin

537272-094811M-BDN

Printed in U.S.A.

Repair Chart & List - Type FM-K Magnetos

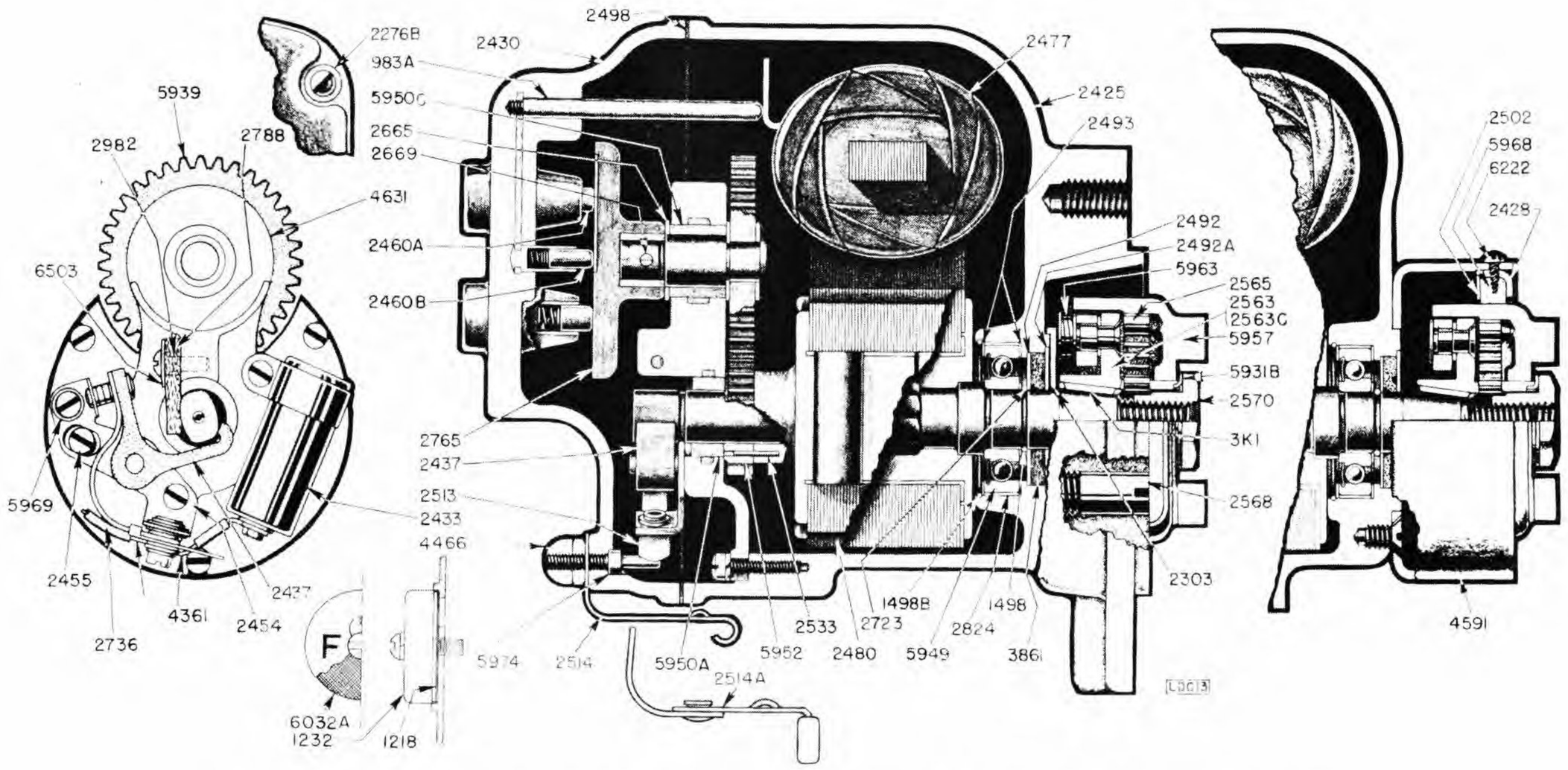

Obtain Repair Parts from Factory-Authorized Magneto Service Stations

Identification	Order by Part No.	Name of part. Unless otherwise specified, part is for both base and flange, CW and CCW magnetos.	No. Used FM-K4
983A	A983A	Distributor Lead Rod	1
1218	A1218	Vent Hood Gasket	2
1232	B1232	Vent Hood	2
1498	C1498	Rotor Shaft Snap Ring	1
1498B	B1498B	Rotor Bearing Snap Ring	1
2276B	B2276B	End Cap Screw Washer	4
2303	E2303	Oil Slinger Baffle Disc	1
2425	T2425	Frame (Flange Mounting)	1
2425	U2425	Frame (Base Mounting) (Inc. A983A,A1218,B6030B,6S4N,#6LW)	1
2428	C2428	Coupling Cupped Washer (Base Mounting)	1
2430	M2430	Distributor End Cap	1
2433	M2433	Condenser (Inc. A4361)	1
2437	P2437	Breaker Point Set (CW) Inc.E2454,D2788.	1
	Q2437	Breaker Point Set (CCW) Inc.F2454,D2788.	1
2454	E2454	Stationary Point & Support (CW)	1
	F2454	Stationary Point & Support (CCW)	1
2455	C2455	Breaker Point Adjusting Screw	1
2460A	D2460A	Distributor Brush & Spring	4
2460B	E2460B	Coil Brush & Spring	1
2477	C2477	Coil Assembly. (Inc. E2736,A4361)	1
2480	U2480	Magnetic Rotor. (Inc. C2533,D5952)	1
2492	C2492	Dust Seal Flat Washer	1
2492A	A2492A	Outer Retaining Washer	1
2493	C2493	Bearing Insulating Washer	1
2498	F2498	End Cap to Frame Gasket	1
2502	D2502	Coupling Housing Flat Washer (Base Mtg.)	1
2513	B2513	Primary Ground Contact Spring	1
2514	C2514	Ground Switch Lever. (Flange Mounting)	1
2514A	B2514A	Ground Switch Lever	1
2514C	B2514C	Ground Switch Group. (Lever Type) (Inc. B2513,C2514,A4466,A5974)	1
	C2514C	Ground Switch Group (Insulated Lever Type) (Inc. B2513,B2514A,A4466,A5974)	1
2533	C2533	Rotor Gear Pin	1
2563	*2563	Coupling Hub Assembly. (Inc. 5963)	1
2563	*2563C	Coupling Complete. (Inc.2563,2565,5957)	1
2565	D2565	Coupling Spring (Series U)	1
2568	C2568	Coupling Pawl Stop Pin (CW) Flange Mtg.	1
	D2568	Coupling Pawl Stop Pin (CCW) Flange Mtg.	1
2570	G2570	Impulse Coupling Nut	1
2665	A2665	Distributor Shaft Flat Washer	1
2669	B2669	Distributor Disc Locating Pin	1
2723	H2723	Rotor Shaft Thrust Bearing Washer Shim	1
2736	E2736	Primary Lead Wire Tube	1
2765	H2765	Distributor Disc	1
2788	D2788	Cam Felt Wick	1
2824	A2824	Bearing Insulating Strip	1
2982	A2982	Cam Felt Wick Spacer	1
3861	G3861	Bearing Seal Rubber Washer	1
4361	A4361	Lead Wire Terminal	2
4466	A4466	Ground Screw Nut	1
4591	A4591	Coupling Housing (Base Mounting)	1
4631	F4631	Bearing & Breaker Support Assembly (CW) (Inc.D2788,A2982,A5950A,A5950C,C6503)	1
	G4631	Bearing & Breaker Support Assembly (CCW) (Inc.D2788,A2982,A5950A,A5950C,C6503)	1
5931B	A5931B	Coupling Nut Lockwasher	1
5939	L5939	Distributor Shaft & Gear	1
5949	C5949	Ball Bearing (Drive End)	1
5950A	A5950A	Sleeve Bearing (Opposite Drive End)	1
5950C	A5950C	Sleeve Bearing (Distributor)	1
5952	D5952	Rotor Gear	1
5957	M5957	Coupling Shell (CCW). Type UB	1
	N5957	Coupling Shell (CW). Types UB, UB1	1
	P5957	Coupling Shell (CCW). Type UA	1
	Q5957	Coupling Shell (CW). Type UA	1
5963	B5963	Pawl Spring (Type UB1)	2
5968	B5968	Coupling Housing Felt Washer (Base Mtg.)	1
5969	B5969	Stationary Contact Washer	1
5974	A5974	Primary Ground Post	1
6030B	B6030B	Sealing Plate	2
6032A	A6032A	Vent Screen	2
6032F-C	A6032F-C	Venting Assembly Complete (Inc. A1218,B1232,A6032A,6LW1,6S8N)	2
6222	B6222	Coupling Housing Washer Screw (Base Mtg.)	2
6503	C6503	Cam Felt Wick Holder	1
	3K1	Key (Rotor to Impulse Coupling)	1

* Specify type coupling, lag angle, and direction of rotation.