FAIRBANKS MORSE
A MAJOR INDUSTRIAL COMPONENT OF
FAIRBANKS WHITNEY

INSTRUCTIONS
TYPE FMWIM7
FLYWHEEL MAGNETOS

MAGNETO and ENGINE ACCESSORIES DIVISION • BELOIT, WISCONSIN

SERVICE INSTRUCTIONS
TYPE FM-W1M7 FLYWHEEL MAGNETOS
WISCONSIN MOTOR CORP., MODEL S-7 ENGINES

General Description

The Fairbanks-Morse Type FM-W1M7 magneto is an 8-1/4 in. diameter flywheel magneto designed and engineered for installation on Wisconsin Motor Corp. Model S-7 single cylinder spark ignited engine. On this engine, the stator plate functions as a support for the coil and coil lamination as well as providing the flywheel end main bearing fit. The coil has a removable ignition lead for easy and rapid replacement. The flywheel, with the cooling fan as an integral part of the wheel, contains the permanent magnets that provide the energy for the ignition system and is secured to the engine crankshaft.

The breaker points, condenser and stop button are located on the side of the engine in a weatherproof metal box. Such an arrangement protects these parts from airborne contamination. Points and condenser are readily accessible for inspection and quick replacement. Only a competent mechanic using adequate test equipment should make coil replacement. A push rod actuated by the engine cam operates the points at 1/2 engine speed which lengthens breaker point life.

Service Procedure

The first step in magneto field servicing, when the engine is hard to start or will not start, is to examine the magneto. Check it carefully for loose connections, broken wires, or worn spark plug leads. Replace worn or corroded leads.

Then test the ignition spark while the engine is being cranked. Insert a short piece of stiff wire into the insulating boot until secondary continuity is made. Hold the tip of the wire 1/4 in. away from the spark plug hex. If a strong spark is seen the magneto is not the cause of engine malfunction. If no spark is seen, proceed with servicing the magneto.

Servicing Breaker Points

Remove the breaker point box cover and examine the points for pitting, oxidation and shorting. If points are worn or corroded, they should be replaced.

To remove the point set, take off the breaker arm terminal nut releasing the coil lead and condenser lead. Then remove the support bracket screw and lift the point set out of the box as a unit. When replacing the points, be sure they are bright and clean and the feeler gauge is free of any foreign material.

Place the point set in the box with the pivot post in the hole in the bottom of the box. Insert the support screw and partially tighten it. Place a screwdriver between the bosses in the bottom of the box with one edge in the slot in the support plate. With the pushrod at high point of cam, turn the screwdriver until the clearance of 0.020 in. is obtained. Then tighten the support screw. Recheck the contact separation and replace the coil lead, condenser lead and the box cover. At this point, the engine should be near exact timing position. For further timing check, refer to the engine manufacturers timing procedure and follow it carefully.

Further Field Servicing

If sequence above does not correct the magneto malfunction, it is suggested that the unit be given further servicing by an authorized service account.

Service Facilities

Fairbanks-Morse magnetos are sold and serviced by more than 4300 authorized service accounts located throughout the world -- choose the one nearest you for factory authorized service and genuine Fairbanks-Morse parts.

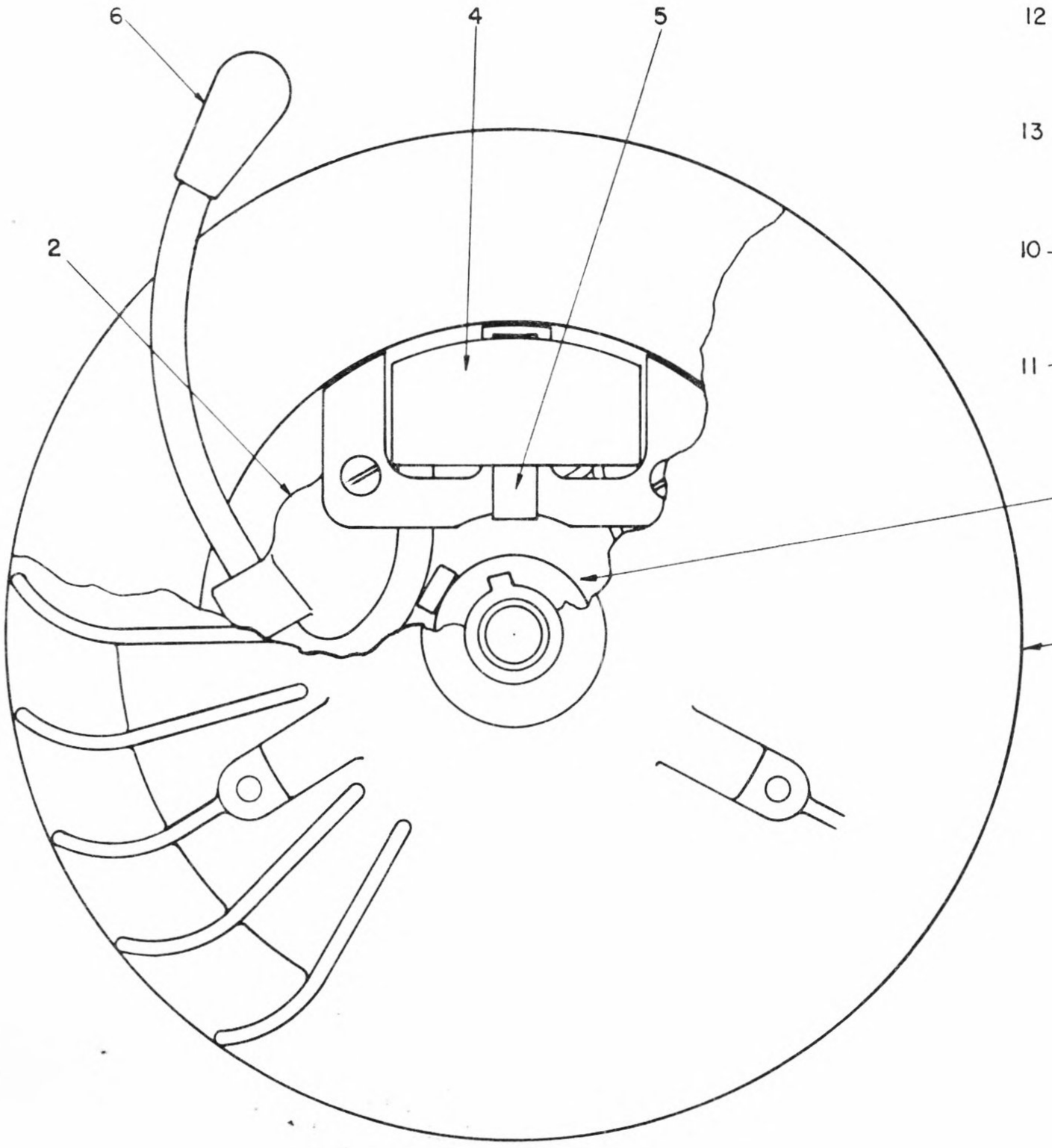

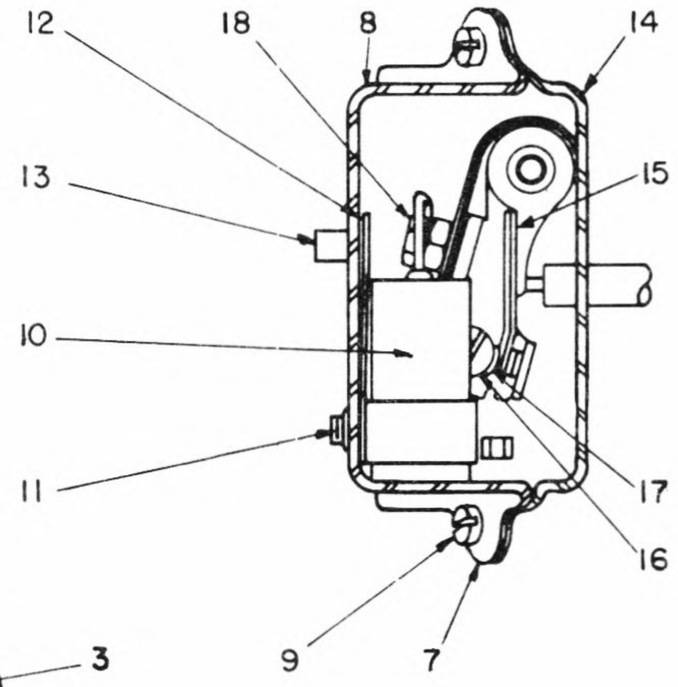

Ref. No.	Order by Part No.	Name of Part	No. Used
1	10 032 859	Flywheel	1
2	10 032 858	Stator Plate, Laminations and Coil	1
3	10 032 890	Stator Plate and Lamination Assembly	1
4	X2477	Coil	1
5	D2476	Coil Clip	1
6	10 033 731	Coil High Tension Lead	1
7	10 032 860	Breaker Point, Condenser and Box Assembly	1
8	10 032 891	Cover	1
9	8S5X	Cover Screw - #8-32x5/16"	2
10	GX2433	Condenser	1
11	8S5X	Condenser Screw - #8-32x5/16"	1
12	10 032 893	Contact Strip	1
13	10 032 894	Stop Button	1
14	10 033 578	Contact Support Plate	1
15	10 032 892	Point Set	1
16	8S5X	Point Set Mounting Screw - #8-32x5/16"	1
17	B5969	Breaker Point Mounting Screw Plate Washer	1
18	6N1	Point Set Terminal Nut	1