FAIRBANKS-MORSE

MAGNETO DIVISION
BELOIT, WISCONSIN

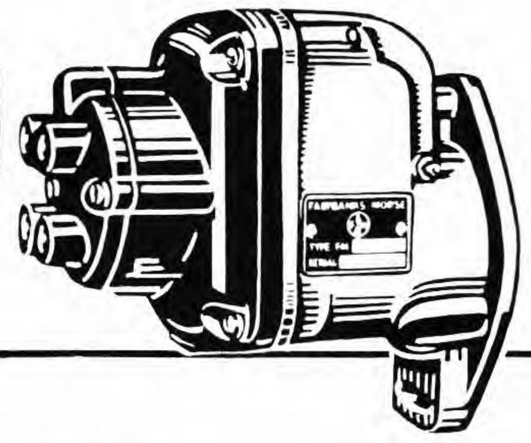

INSTRUCTION 3063A
SUPERSEDES INSTRUCTION 3063
April 1958

TYPE FM-WG2P87 FLYWHEEL MAGNETO GENERATOR FOR 30 H. P. WESTBEND OUTBOARD MOTOR

GENERAL DESCRIPTION

Modern ignition systems are designed to provide quick, easy starting and maximum dependability of engine operation with minimum adjustment and service. Advanced engineering and rugged construction has made Fairbanks-Morse magnetos performance leaders in the field. Adjustments, when necessary, are simple and should be made in accordance with these instructions. It is suggested that the magneto be examined only when it is certain that the ignition spark is not satisfactory. This condition may be determined by tests easily made in the field.

TESTING THE IGNITION SPARK

With good spark plugs, properly adjusted, the ignition spark should bridge a short gap in addition to the actual spark plug discharge at the engine. This may be determined with the engine running by holding the end of the ignition cable about 1/16 inches from the spark plug terminal. The usual precautions should be taken to avoid electric shock. The engine should not misfire when this is done. Tests should not be made while any part of the system is wet.

SERVICING BREAKER POINTS

Before examining the breaker points, it will be necessary to remove the flywheel. This is done by loosening the flywheel nut until it is flush with the end of the crankshaft. Then strike the nut sharply with a hammer. This will jar the flywheel loose from the crankshaft taper. Remove the nut and lift off the flywheel.

Breaker points should be inspected for pitting or pyramiding. They should be clean and meet squarely. A small tungsten file or fine stone should be used to resurface the points. Badly worn or pitted points should be replaced. When it is necessary to resurface or replace the breaker points, it will also be necessary to adjust them to the correct clearance of 0.020 in. after the follower is aligned with the groove machined on top of the cam. This adjustment is made in the following manner: Move the crankshaft until the points are fully open. Loosen the contact support locking screws, then insert a screwdriver in the small triangular depression on the plate and turn it until the correct clearance is obtained. Lock the assembly in place by tightening the locking screws; then take a final measurement of the breaker point gap. Repeat this procedure with the other set of points.

FIELD SERVICE NOT RECOMMENDED

The cam felt wicks, when dry or hard, should be replaced by new factory impregnated wicks. Other than this, Fairbanks-Morse magnetos should not require field lubrication. Coil and condenser replacements are not recommended unless the correct testing equipment is available. If facilities are available, test the generator coil for continuity and grounded turns. Replace all coils found lacking in continuity. No further test can be recommended. The generator produces approximately 35 to 40 amperes as measured from the rectifier, and the only regulation is the battery.

> CAUTION: DO NOT OPERATE THE GENERATOR THROUGH THE RECTIFIER WITHOUT HAVING THE BATTERY CONNECTED.

MAGNETO SERVICE FACILITIES

Authorized Fairbanks-Morse magneto service stations are located throughout the United States and foreign countries. These service stations have been carefully selected by Fairbanks, Morse & Company to insure complete, highly efficient repair service and genuine repair parts for owners of Fairbanks-Morse magnetos. These service stations are especially equipped for magneto repair and are manned by trained personnel. They maintain close contact with the factory service and engineering departments. The station nearest you can be located by referring to Bulletin FM18, latest state.

Genuine replacement parts can be obtained

Printed in U.S.A.

from all Authorized Service Stations and should always be insisted on for repairs. The use of spurious parts usually proves less satisfactory and economical. In addition to voiding the manufacturer's guaranty.

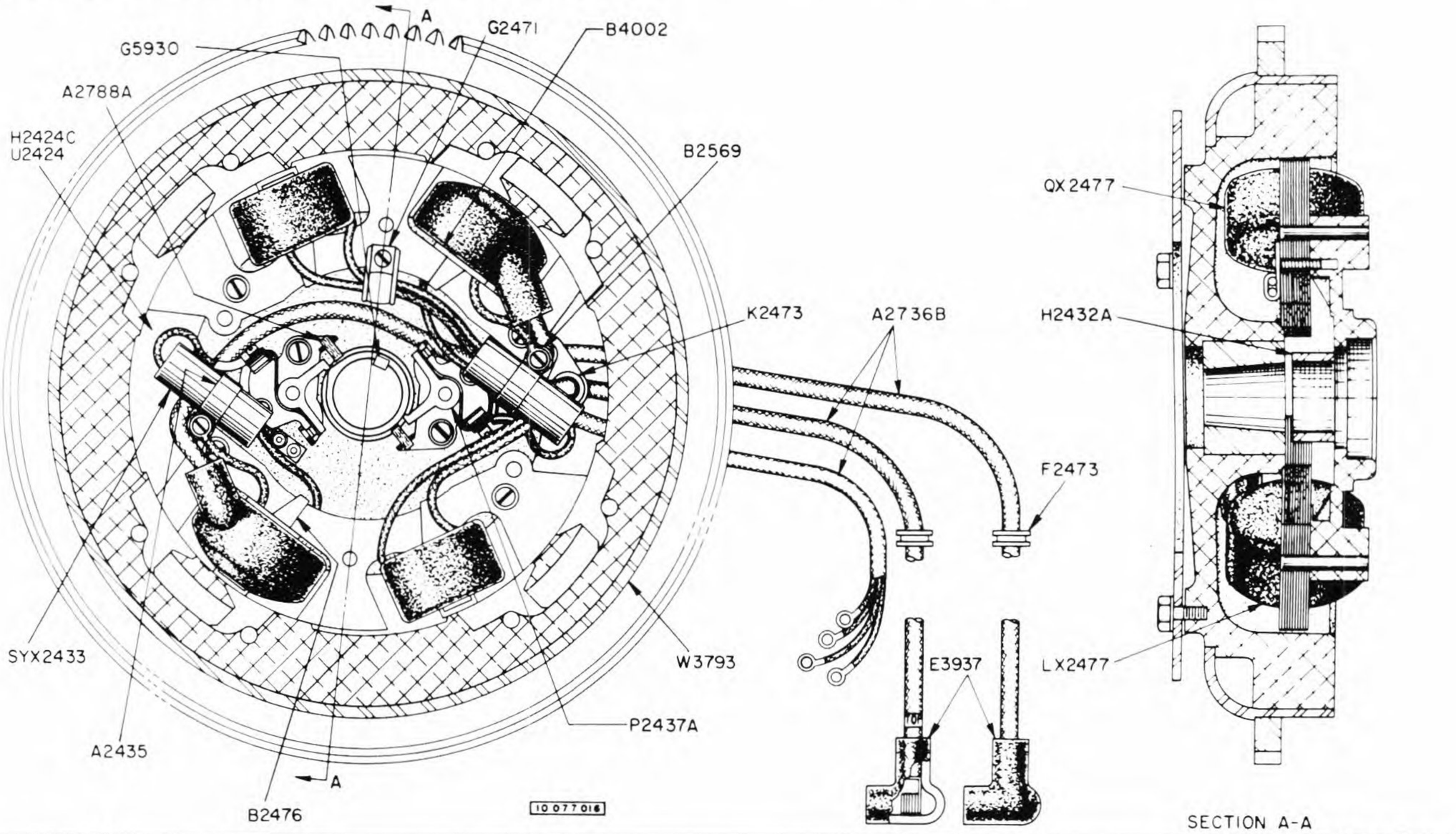

Order by Part No.	Name of Part	No. Used
U2424	Stator Plate Assembly	1
H2424C	Plate, Field Lamination, Coil, Breaker Arm, Point Set and Condenser Assembly	1
10S16V	Field Lamination Screw - #10-24x1"	4
H2432A	Cam	1
SXY2433	Condenser	2
8S6J	Condenser Mounting Screw - #8-32x3/8"	2
A2435	Condenser Mounting Bracket	2
P2437A	Contact Set	2
8S6J	Contact Set Screws - #8-32x3/8"	4
6S6N	Breaker Arm Terminal Screw - #6-32x3/8"	2
6LW1	Breaker Arm Terminal Screw Lockwasher	2
G2471	Lead Wire Clip	1
8S6J	Lead Wire Clip Screw - #8-32x3/8"	1
F2473	Grommet - Rubber	3
K2473	Grommet	1
B2476	Coil Retaining Clip	4
LX2477	Coil	2
QX2477	Generator Coil	2
B2569	Condenser Bracket Spacer	2
A2736B	Lead Wire Tube - 6" Lg.	1
A2736B	Lead Wire Tube - 9-1/4" Lg.	1
A2736B	Lead Wire Tube - 15" Lg.	1
A2788A	Cam Wick	2
W3793	Flywheel and Starter Gear Assembly	1
E3937	High Tension Cable Terminal and Spring	2
31L11Y	Emergency Starter Collar to Flywheel Screw - 5/16"-18x11/16"	3
31LW2	Emergency Starter Collar to Flywheel Screw Lockwasher	3
B4002	Coil Spacer	3
G5930	Key	1