BULLETIN FM264

FAIRBANKS-MORSE MAGNETO IMPULSE COUPLINGS COMPONENT PARTS and APPLICATION

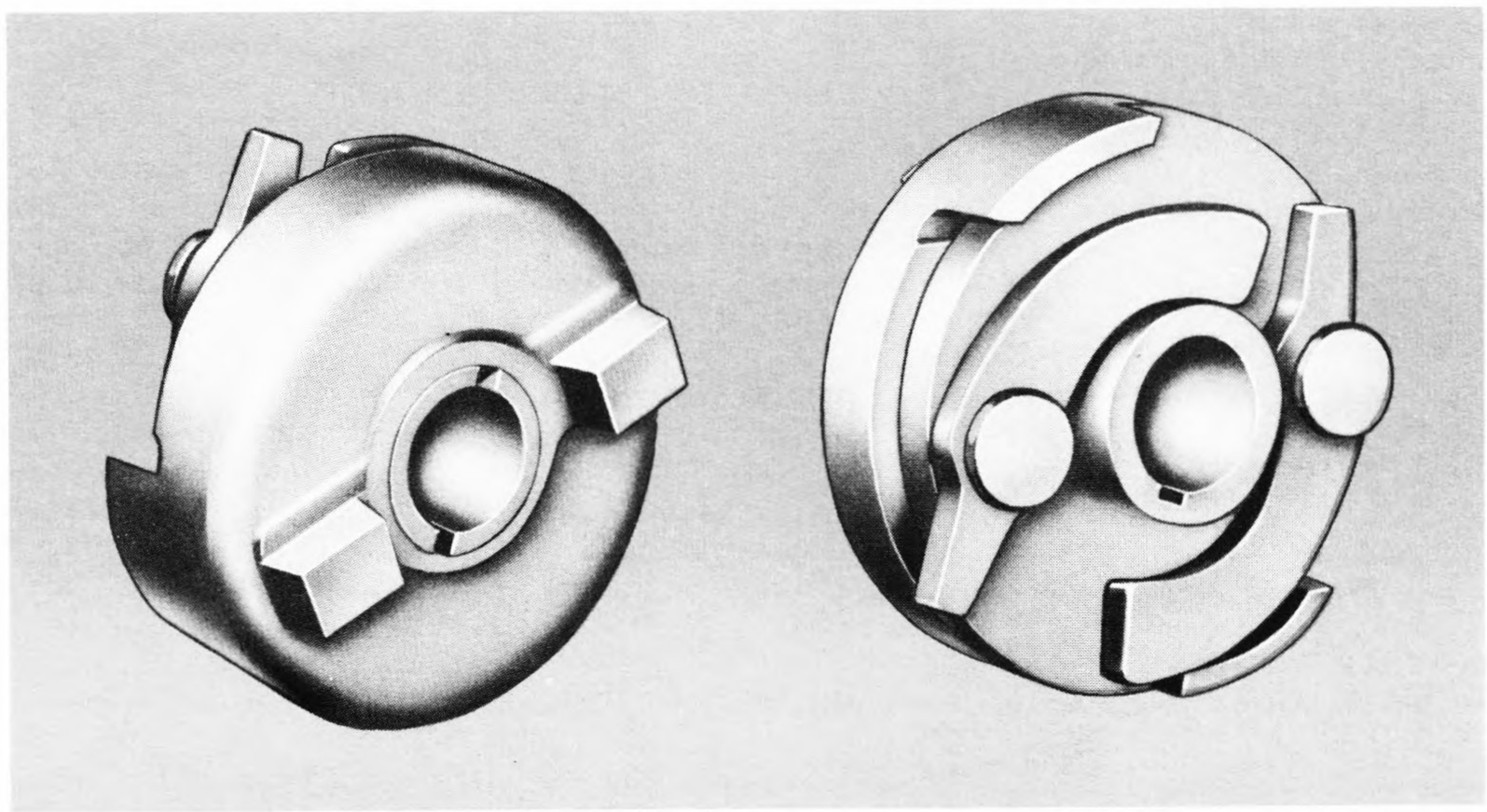







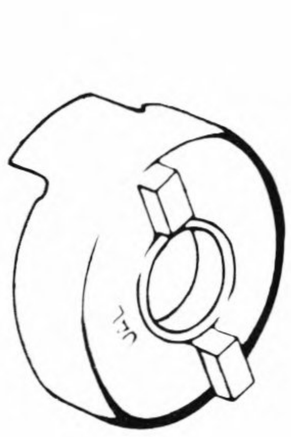







BULLETIN FM264

Supersedes RPL 9835B

November, 1959

File Section - IMPULSE CPLGS./GRD. SWITCHES

TABLE of CONTENTS

	Page
Instructions for Ordering	2
Identification of Impulse Couplings	3
General Information - Impulse Coupling Repairs	4
Types UA and UB Impulse Couplings and Charts	6
Types UC and UD Impulse Couplings and Charts	15
Impulse Coupling Housings for Base Mounting Magnetos	17
Impulse Coupling Nuts and Bushings	18
Impulse Coupling Pawl Stop Pins	19
Drive Member, Float Disc and Special Adapter	20
Impulse Couplings and their Application	24
Tabulation of Fairbanks-Morse Magnetos and their Impulse Couplings	32

INSTRUCTIONS for ORDERING IMPULSE COUPLING REPAIRS

IDENTIFICATION

Before ordering replacement couplings or repair parts, the original coupling must be examined and identified by determining these characteristics:

1. The impulse coupling series
2. The rotation of the coupling
3. The impulse coupling type
4. The coupling lag angle

IMPULSE COUPLING SERIES

The basic group into which Fairbanks-Morse couplings have been classified is illustrated and described on page 3.

COUPLING ROTATION

The second step in identification of couplings or coupling parts is the accurate determination of the rotation, pages 4 and 5.

COUPLING TYPE

Knowing the coupling series and the rotation, the coupling type can be determined by examining the assembly and comparing its special features with those shown in the various repair charts. Special features include such items as pawl springs, width of drive lugs, drive lug angle and keyway position.

COUPLING LAG ANGLE

The coupling lag angle is stamped on the coupling hub during manufacture and must be located and specified whenever a complete replacement coupling or hub assembly is ordered.

COUPLING REPLACEMENTS

In many cases the factory does not furnish replacement couplings identical to the original equipment. Such changes are explained in notes listed in connection with the repair chart and list covering the original coupling assembly.

COUPLING HOUSINGS

Closely related parts include the coupling housing assembly used on base mounted magnetos. Since these parts must fit both the magneto and the coupling, the description on page 17 should be studied before ordering.

COUPLING NUTS AND STOP PINS

To order coupling nuts and stop pins the coupling type, rotation and magneto application must be known. The tabulation of coupling nuts, bushings and stop pins on pages 18 and 19 will assist in their identification.

IMPULSE COUPLING REPAIR ORDERS

All impulse couplings and impulse coupling parts should be ordered by the part numbers assigned. When ordering complete couplings or coupling hub assemblies, the desired lag angle must be specified.

SPECIAL NOTICE

Bulletin FM264 supersedes all previous information covering impulse couplings, coupling parts and drive members furnished by the company.

Specifically superseded are RPL9835B and FM235.

GENERAL IDENTIFICATION of IMPULSE COUPLINGS

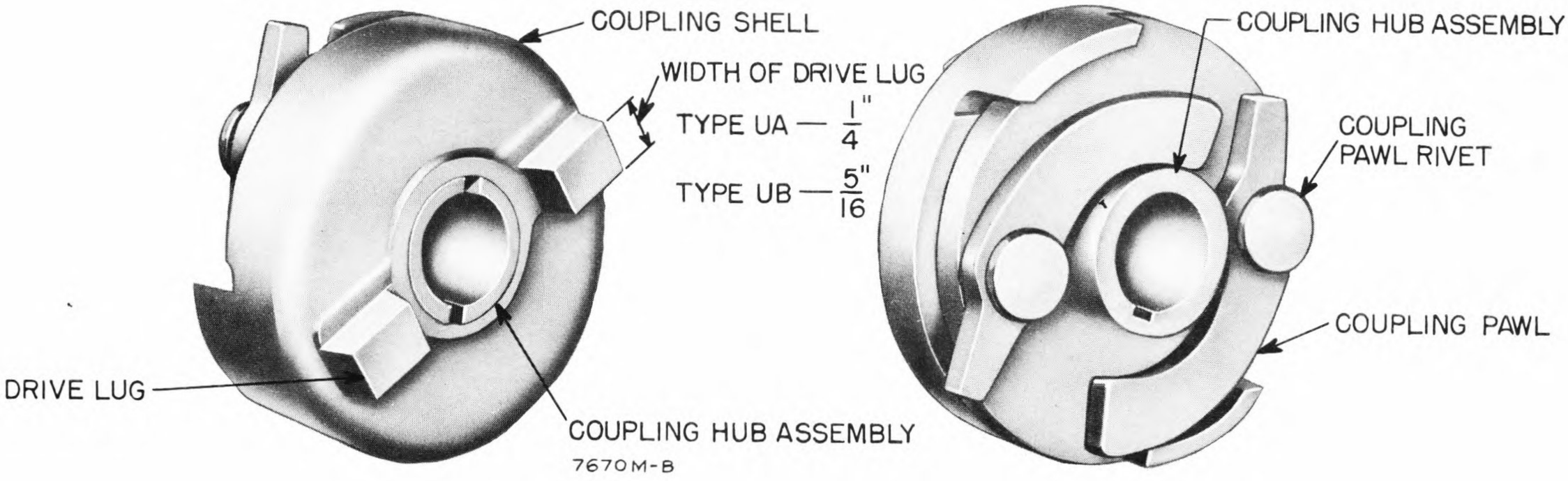

TYPE UB IMPULSE COUPLINGS - CW ROTATION

SERIES U IMPULSE COUPLINGS

The Series U impulse couplings differ from all other Fairbanks-Morse couplings in several respects, which make identification easy. It has a forged steel shell with machine-cut drive lugs and flat, punched steel pawls, riveted to the hub assembly. Series U couplings include the Type UA 1/4" drive lugs, Type UB 5/16" drive lugs, Type UC small diameter, single pawl, Type UD small diameter, twin pawl, and variations of each.

SERIES W AND X IMPULSE COUPLINGS

Series W and X impulse couplings are obsolete and not available in certain lag angles. When the present stock of parts for these impulse couplings is exhausted, the series W and X impulse couplings will be discontinued.

At that time, when an order is received for a series W or X impulse coupling, a series U impulse coupling of the correct rotation and lag angle will be furnished.

SERIES Y IMPULSE COUPLINGS

Series Y impulse couplings have been discontinued and parts are no longer available. When a series Y impulse coupling is ordered, a series U impulse coupling of the correct rotation and lag angle will be furnished.

SERIES Z IMPULSE COUPLINGS

Series Z impulse couplings were used with magneto drive gears of various sizes necessary to fit the different Fairbanks-Morse Z engines. Drive gears are not included in Type Z coupling group.

When ordering Series Z impulse couplings, send the order to the nearest Fairbanks-Morse Branch House or to Fairbanks, Morse & Co., Kansas City, Kansas.

Parts for Series Z impulse couplings are not available at Fairbanks, Morse & Co., Beloit Works, Beloit, Wisconsin.

GENERAL INFORMATION - IMPULSE COUPLING SERVICE

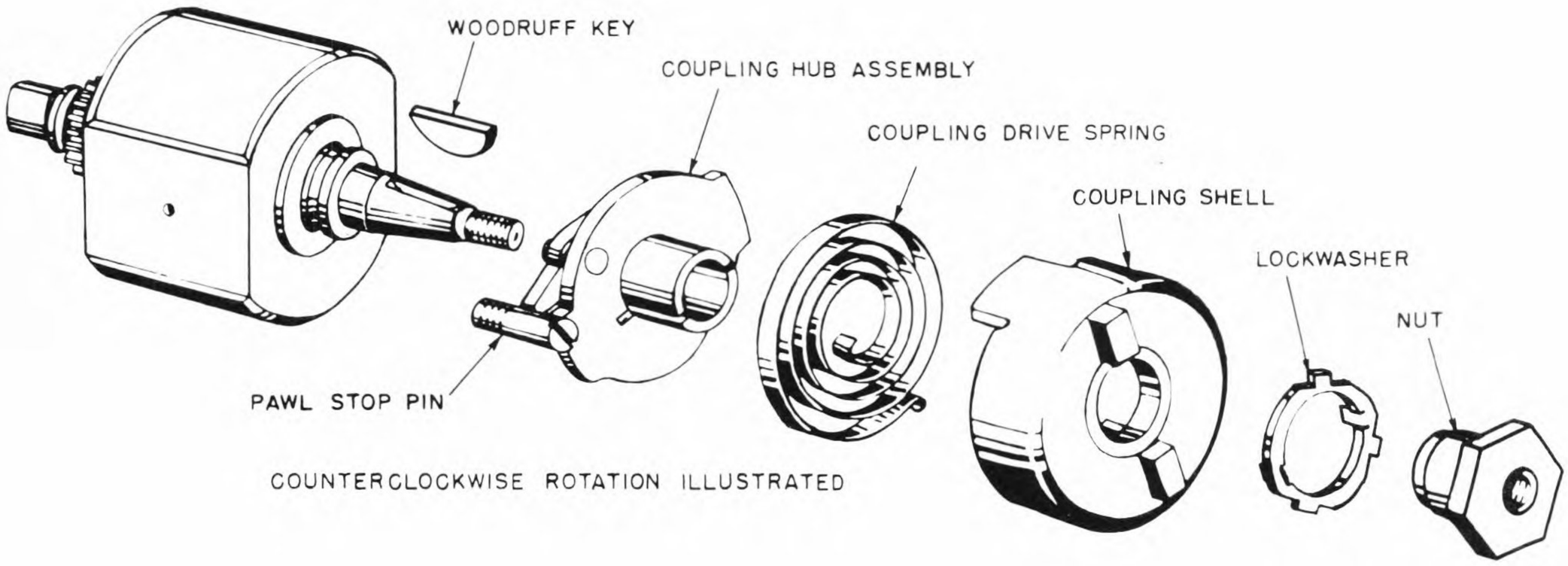

Fig. 1. Magnetic Rotor and Exploded View of Impulse Coupling

FUNCTION

The impulse coupling is a mechanical device used on magnetos to facilitate engine starting. The impulse action of the coupling intensifies the starting spark at low engine speeds and at the same time automatically retards the ignition spark to eliminate engine backfire.

IMPULSE COUPLING ASSEMBLIES

A complete impulse coupling assembly consists of three major parts, the hub, drive spring and shell, Fig. 1. Associated parts such as pawl stop pin, coupling nut, key and lockwasher vary according to different applications.

IMPULSE COUPLING SERIES

Impulse couplings used on Fairbanks-Morse magnetos have been classified according to their basic design. The code letter, U, has been assigned to the current series.

The simplest means of series identification is to compare the coupling in question with the photograph on page 3.

DETERMINING COUPLING ROTATION

The coupling rotation must be determined accurately before a replacement coupling or repair parts can be ordered. Before removing the coupling from the magneto, determine its rotation by turning the coupling shell by hand. When turned in the proper direction, the coupling pawl will engage the stop pin as shown in Fig. 2. Rotation is always specified as viewed from the drive lug end of the coupling. With this in mind, the coupling can be

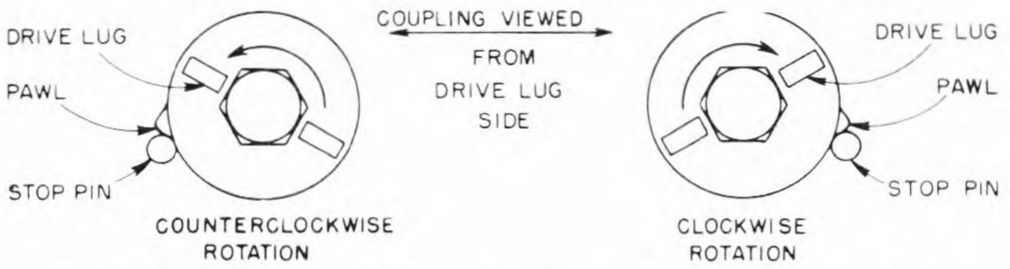

Fig. 2. Coupling Rotation Viewed from Drive End

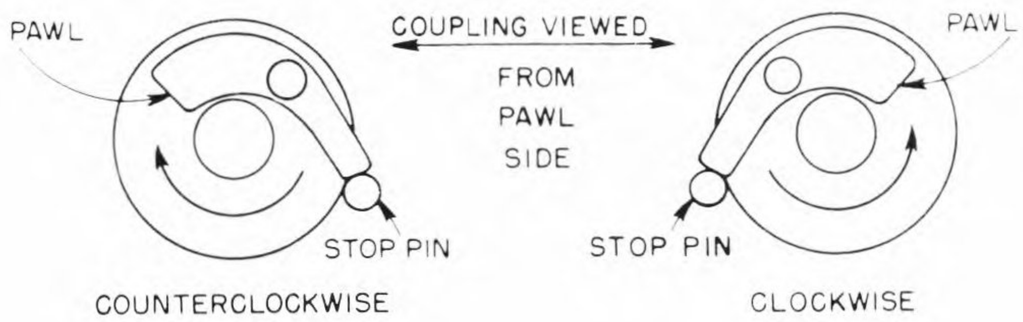

Fig. 3. Coupling Rotation Viewed from Coupling Pawl End

turned over, so the action of the pawls is observed. Referring to Fig. 3, the coupling should be rotated until one of the pawls comes into the position shown, the rotation then being as indicated on the diagram.

Identical reasoning applies to the determination of the coupling hub rotation as to the complete assembly.

ROTATION OF COUPLING DRIVE SPRINGS

The coupling drive spring can be used for either rotation by simply turning it over. Care must be taken to place the spring correctly in the shell, since incorrect assembly will damage the inside anchor end. Fig. 4 illustrates the correct location of drive springs in Series U coupling shells, the positions being similar for the other series.

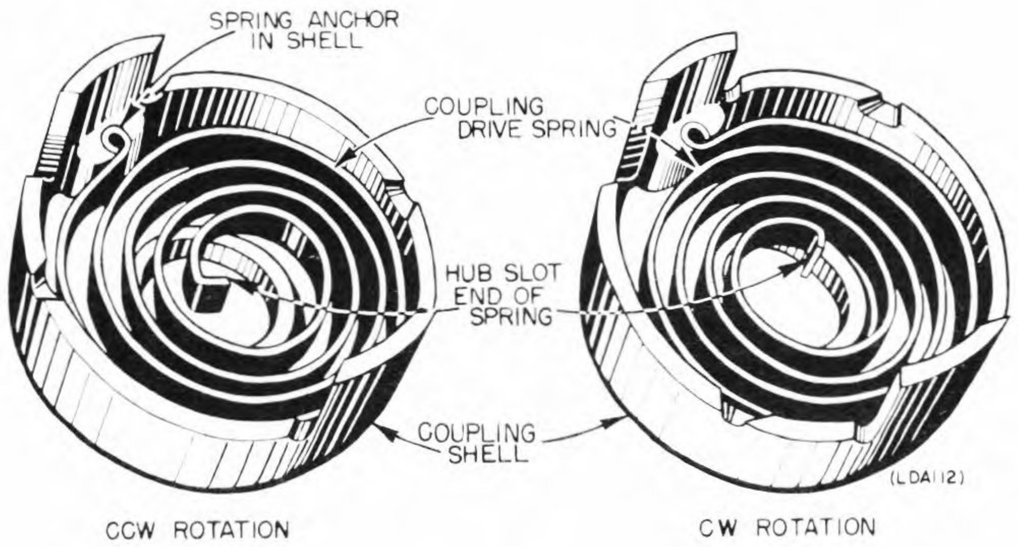

Fig. 4. Position of Drive Spring in Coupling Shell

ROTATION OF COUPLING SHELLS

Series U coupling shells of opposite rotations are not interchangeable and must be carefully identified. To assist in distinguishing coupling shell rotation, counter-clockwise shells have been stamped "CCW" or "L" at the factory with certain exceptions. The rotation of Series U coupling shells can be determined by a simple observation of the edges of the pawl kickoff as shown in Fig. 5. In this test, a ruler or any piece of material one inch wide is laid across the back of the shell, with its edges lined up exactly with the edges of the pawl kickoff. Under such circumstances, it will be found that the ruler can be inserted in only one position and that this position will immediately indicate the rotation when compared with the drawings of Fig. 5.

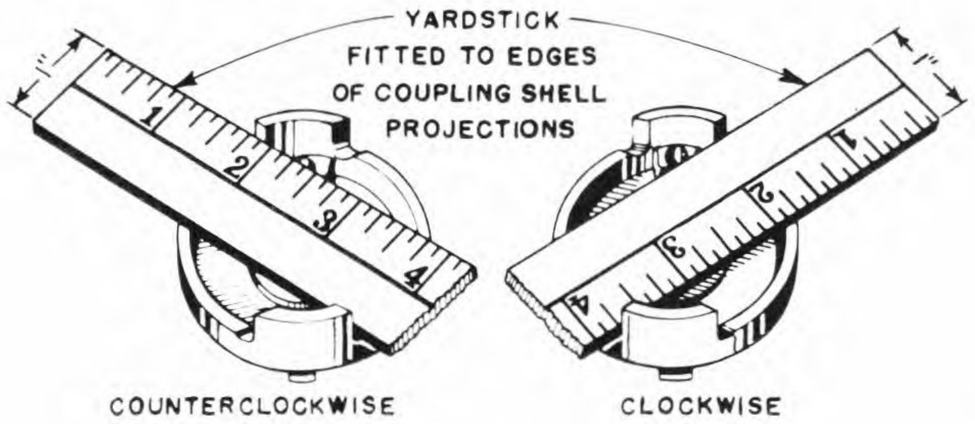

Fig. 5. Determining Rotation of Series U Shells

COUPLING LAG ANGLE

Impulse couplings are designed to automatically retard the engine starting spark. The angular degrees between the running spark and the starting or impulse spark is termed the lag angle of the impulse coupling. It indicates the amount of spark retardation when divided by the ratio of magneto speed to engine speed. The lag angle of a particular coupling is determined by the location of the keyway in the hub assembly. Lag angles of 10° to 50° are usually obtainable. To determine the lag angle of replacement couplings, Fairbanks-Morse impulse coupling hubs are stamped with their lag angle during manufacture. When reordering complete couplings or coupling hubs, this stamped figure must be located and specified.

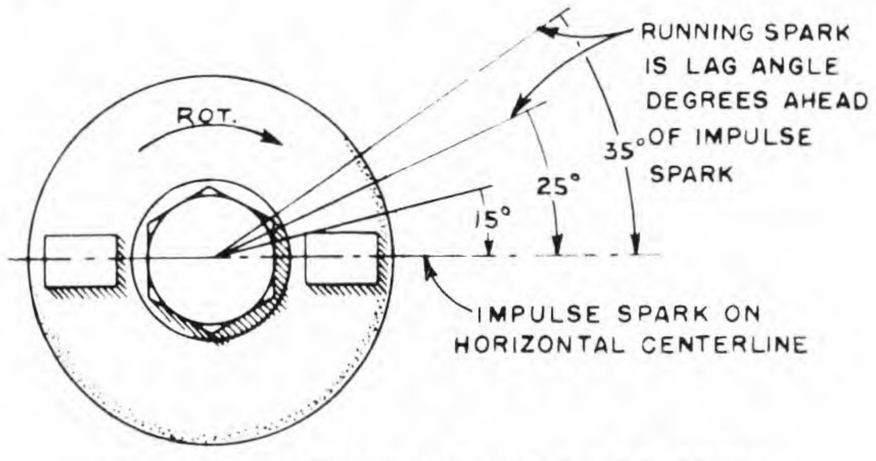

Fig. 6. Impulse Coupling Lag Angle

COUPLING LUG ANGLE

The lug angle of an impulse coupling refers to the position of the drive lugs at the instant the impulse spark occurs. SAE standards designate this position as the horizontal center line, Fig. 7, but many important variations exist. To distinguish such variations, coupling shells are assigned lug angles according to the position of their drive lugs. If these lugs are cut to provide the impulse spark when the horizontal center line is reached, the coupling shell is SAE standard and is said to have a drive lug angle 0°. If the impulse spark occurs X° before the horizontal is reached, the lug angle is minus X°; and if the impulse spark occurs X° after the horizontal center line, the lug angle is plus X°.

All standard Fairbanks-Morse impulse couplings are designed to provide the impulse spark at the horizontal center line. A number of special Series U impulse couplings are available with special drive lug angles in order to adapt replacement magnetos to various engines. In the coupling repair charts, the lug angle of the shell is indicated in degrees whenever different from the SAE standard 0°.

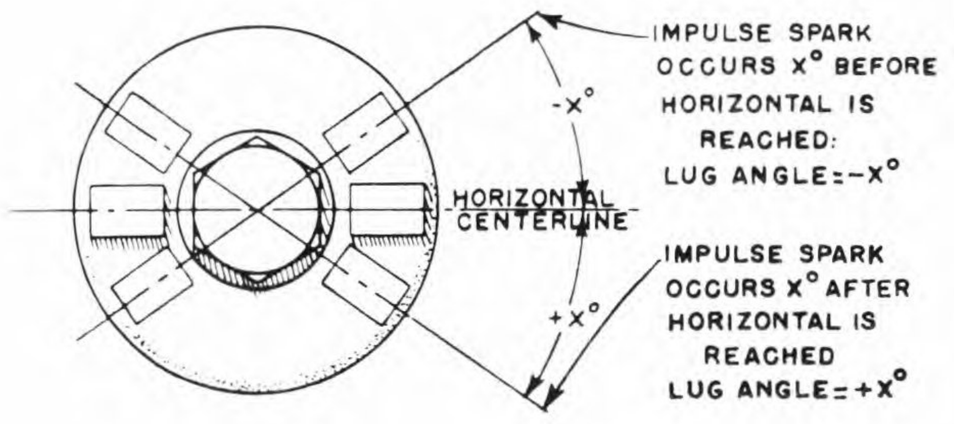

Fig. 7. Coupling Shell Drive Lug Angle

IMPULSE COUPLING TYPES

The Series U impulse couplings consist of four major groups: the Type UA, a standard coupling for base mounted magnetos; the Type UB, a standard coupling for flange mounted magnetos; the Type UC, a small diameter coupling for single cylinder magnetos and the Type UD, a small diameter coupling for multi-cylinder magnetos.

ADJUSTABLE DRIVE MEMBERS

Standard base mounting magnetos are usually connected to the engine drive by means of an adjustable drive member and a float disc, Fig. 20. Drive members are of two sizes: the Type N for standard Types UA, and the Type NC for the small diameter Types UC and UD couplings. Each type can be furnished with different bores to fit engine drive shafts of various diameters.

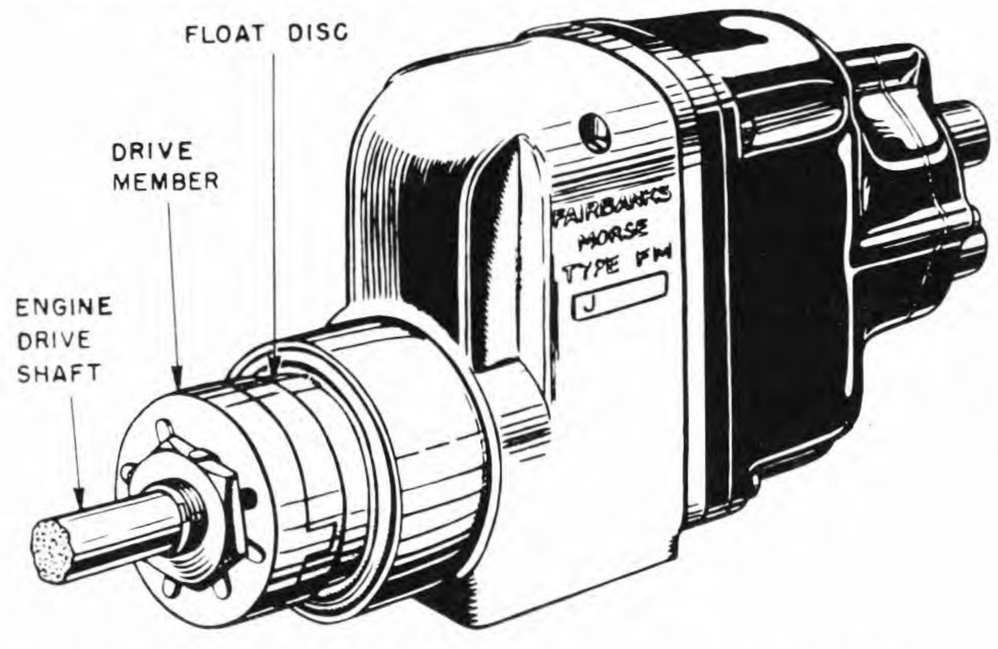

Fig. 8. Adjustable Drive Member and Float Disc

TYPES UA and UB IMPULSE COUPLINGS

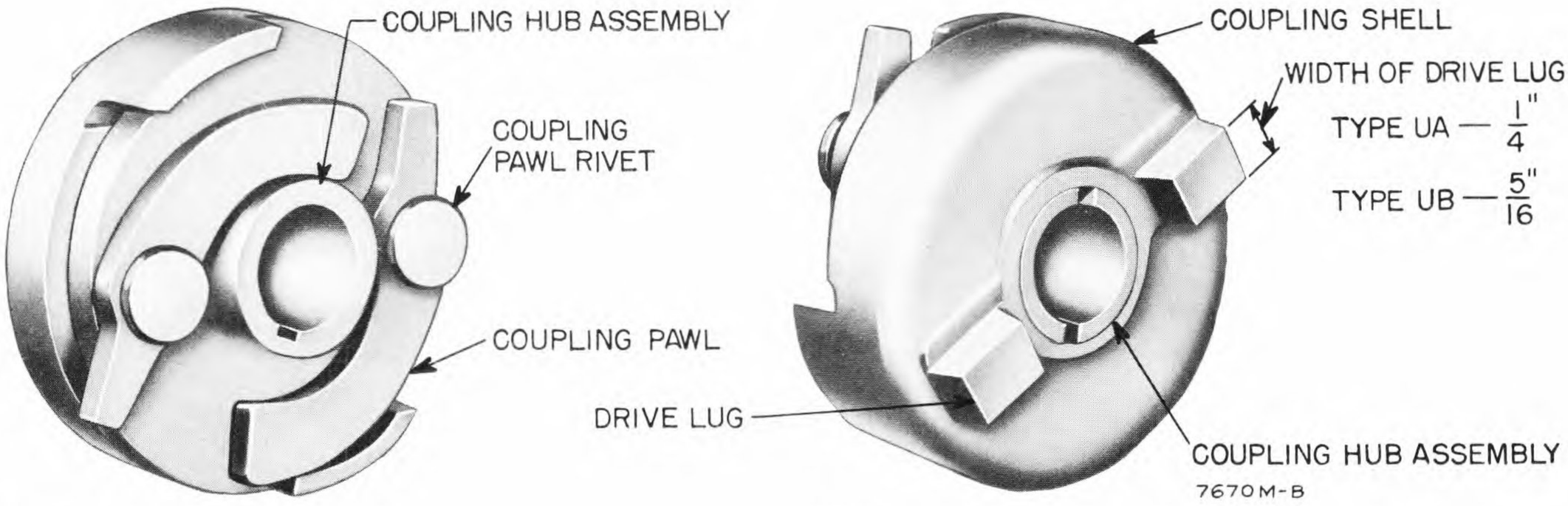

COMPLETE COUPLING

A complete coupling is the assembly of a hub, drive spring and shell into a single unit, ready to be fitted to the magneto. Since any variation of design in the component parts changes the characteristics of the complete coupling, the type designation, rotation, and lag angle must be known before ordering.

HUB ASSEMBLY

The coupling hub is the assembly of the hub plate, pawls, pawl rivets, and pawl washers. The position of the pawls indicates the rotation, while the location of the keyway determines the lag angle. In certain variations, individual pawl springs are required to secure impulse action under special conditions. Such an arrangement necessitates special pawls and pawl rivets.

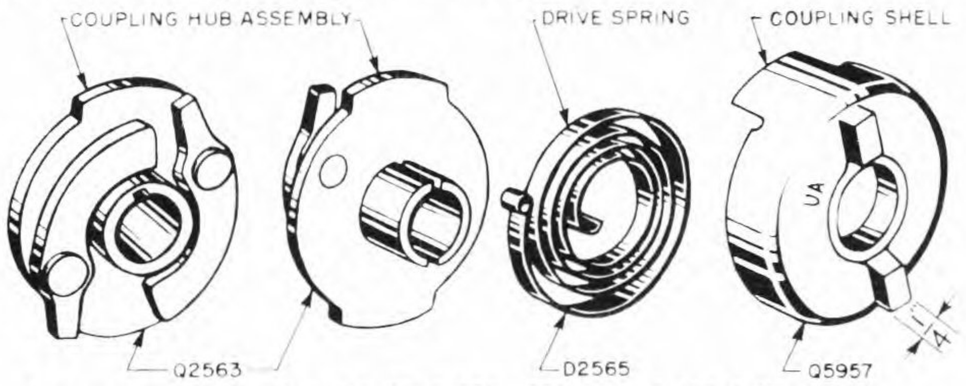

TYPE UA IMPULSE COUPLING COMPLETE - T2563C-LUG ANGLE 0° - CW

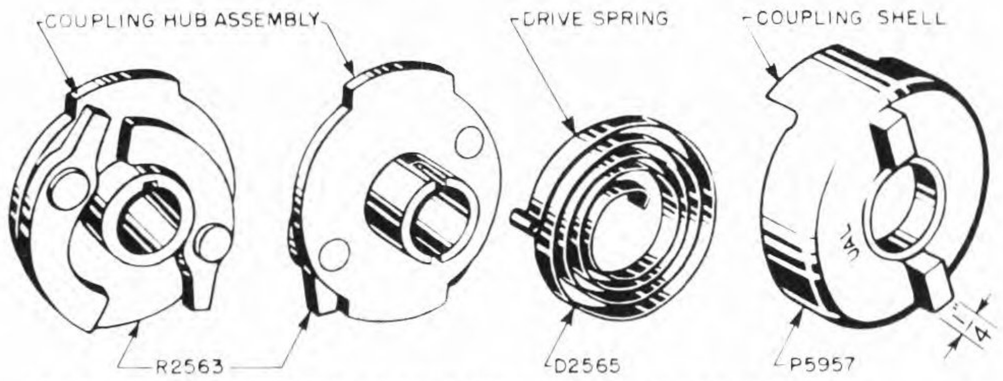

TYPE UAL IMPULSE COUPLING COMPLETE - U2563C - LUG ANGLE 0° - CCW

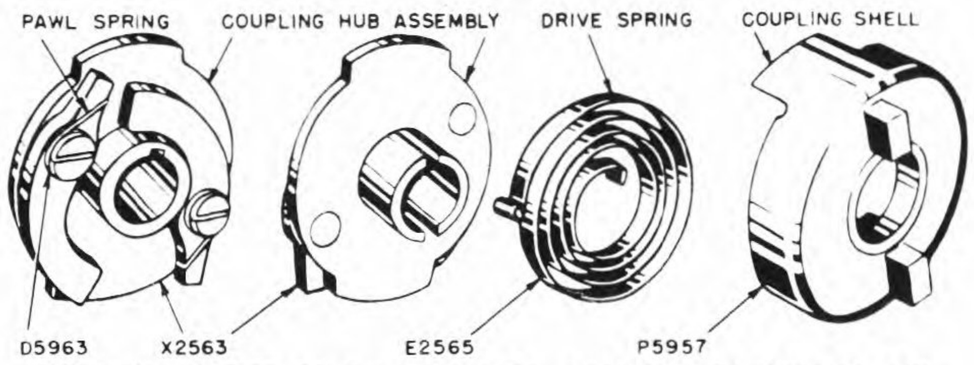

TYPE UAL IMPULSE COUPLING COMPLETE - GW2563C - LUG ANGLE 0° - CCW

DRIVE SPRING

The standard drive spring for Series U couplings is 1/4" wide and has a tight loop at the outer end. For special applications a heavier drive spring 5/16" wide is required. Drive springs are identical for CW or CCW rotation.

COUPLING SHELL

Type UA coupling shells have drive lugs 1/4" wide by 3/16" high, while Type UB shells have lugs 5/16" wide by 1/4" high. Standard Series U coupling shells are cut to produce the impulse spark at the horizontal center line, but variations are available for other special impulse spark positions.

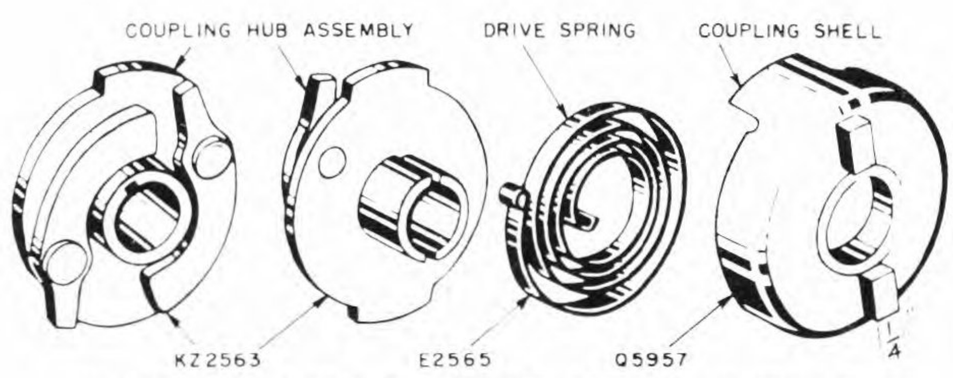

TYPE UA IMPULSE COUPLING COMPLETE - XW2563C - LUG ANGLE 0° - CW

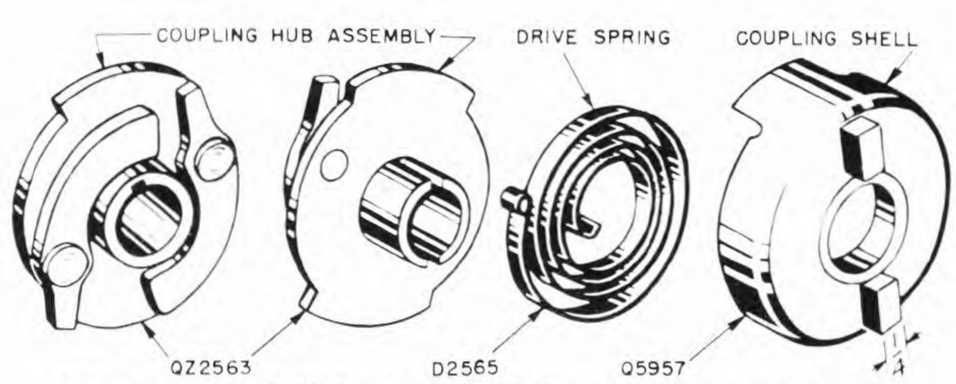

TYPE UA IMPULSE COUPLING COMPLETE - ZW2563C - LUG ANGLE 0° - CW

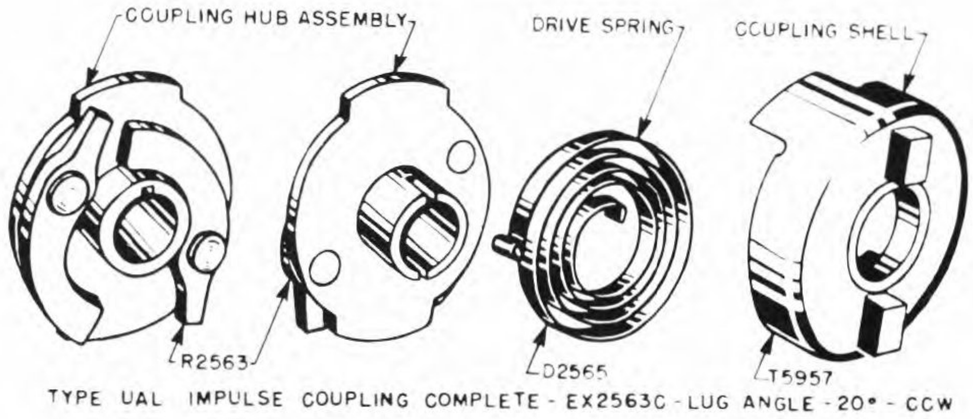

TYPE UAL IMPULSE COUPLING COMPLETE - EX2563C - LUG ANGLE - 20° - CCW

TYPES UA and UB IMPULSE COUPLINGS

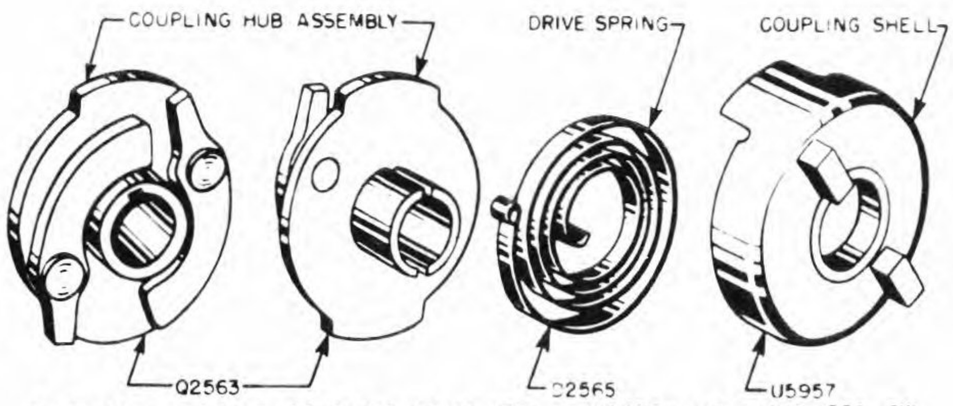

TYPE UA - IMPULSE COUPLING COMPLETE - FX2563C - LUG ANGLE -20° - CW

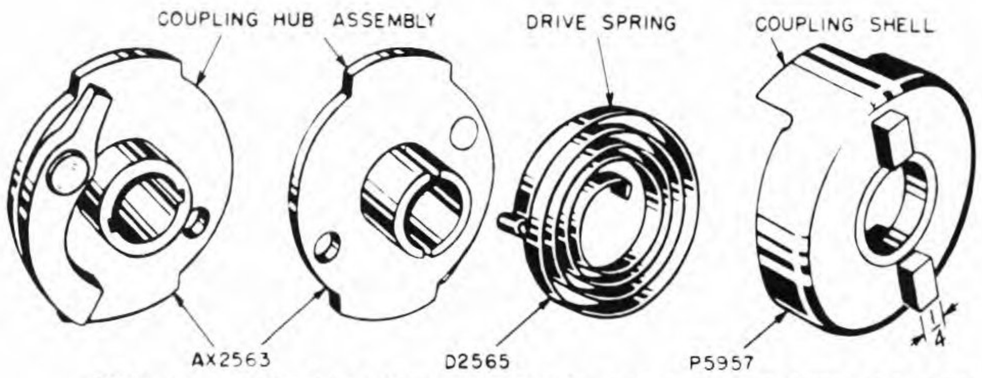

TYPE UAL IMPULSE COUPLING COMPLETE - UY2563C - LUG ANGLE 0° - CCW

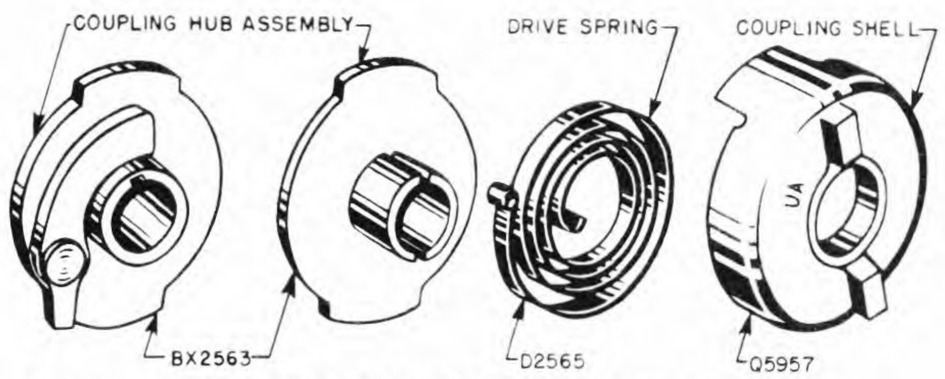

TYPE UA IMPULSE COUPLING COMPLETE - KX2563C - LUG ANGLE 0° - CW

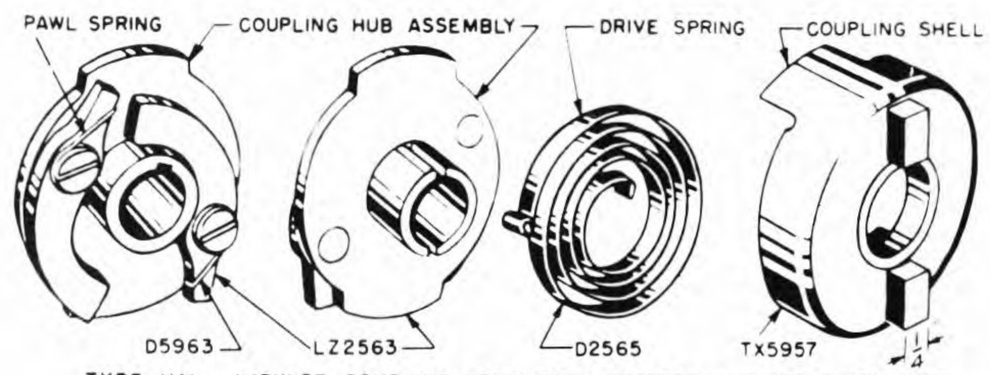

TYPE UAL IMPULSE COUPLING COMPLETE - CZ2563C - LUG ANGLE -10° - CCW

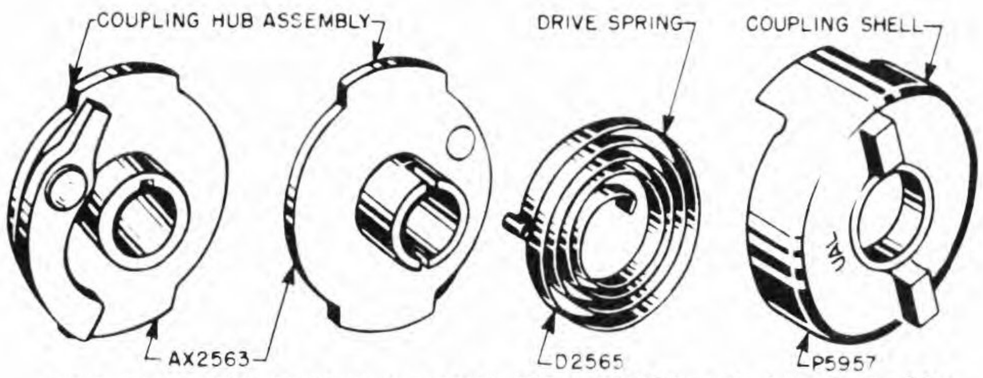

TYPE UAL IMPULSE COUPLING COMPLETE - LX2563C - LUG ANGLE 0° - CCW

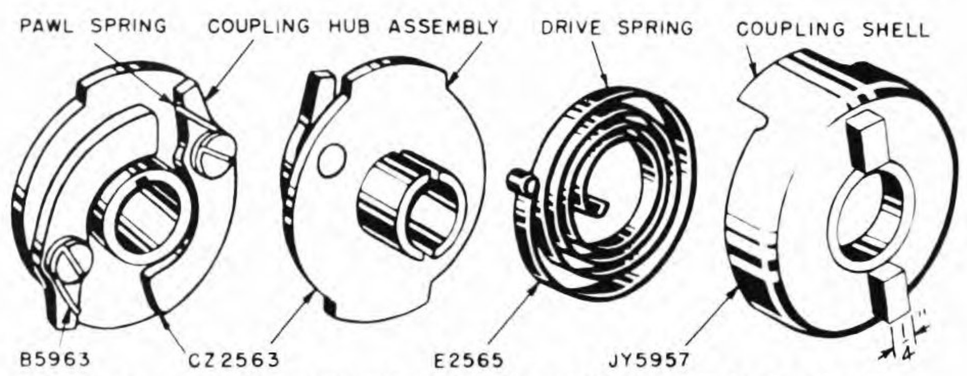

TYPE UA IMPULSE COUPLING COMPLETE - MZ2563C - LUG ANGLE 0° - CW

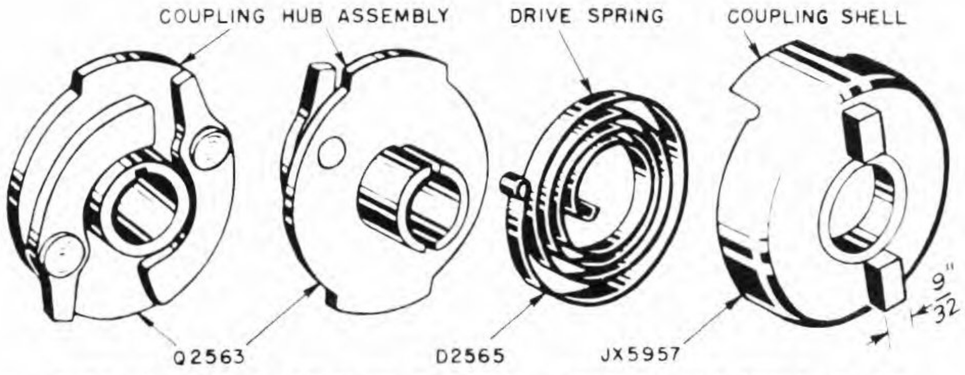

TYPE UA IMPULSE COUPLING COMPLETE - CY2563C - LUG ANGLE 0° - CW

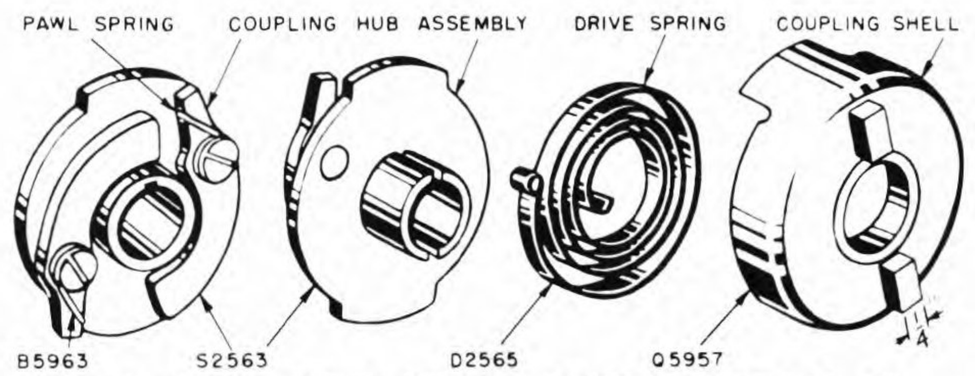

TYPE UA IMPULSE COUPLING COMPLETE - WZ2563C - LUG ANGLE 0° - CW

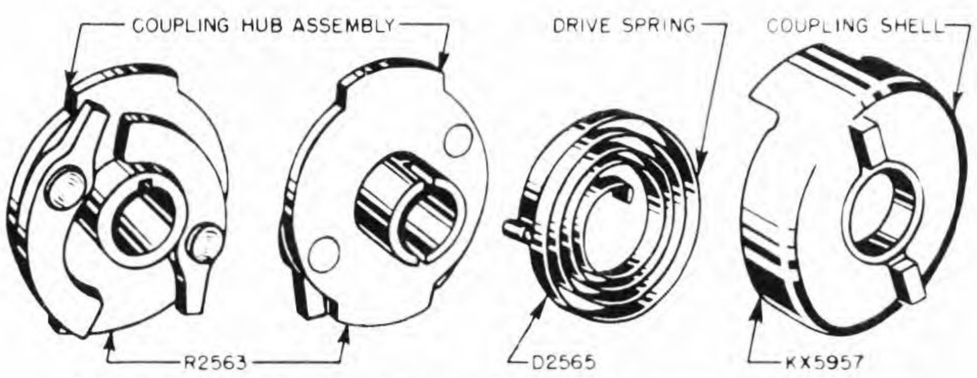

TYPE UAL IMPULSE COUPLING COMPLETE - DY2563C - LUG ANGLE 0° - CCW

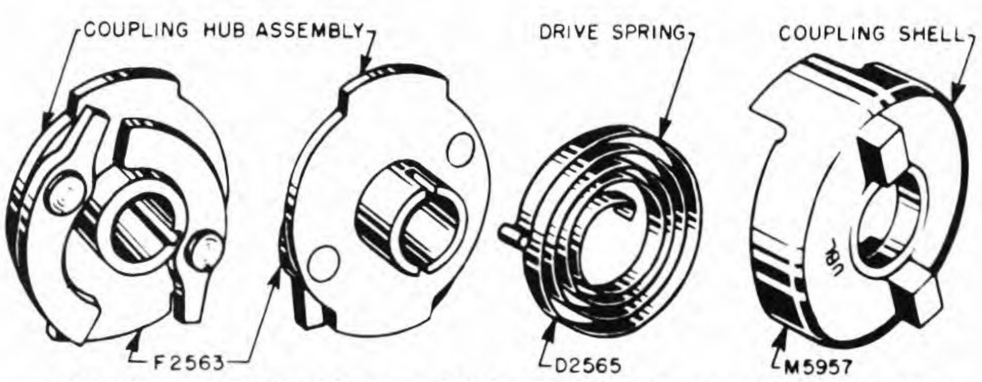

TYPE UBL IMPULSE COUPLING COMPLETE - F2563C - LUG ANGLE 0° - CCW

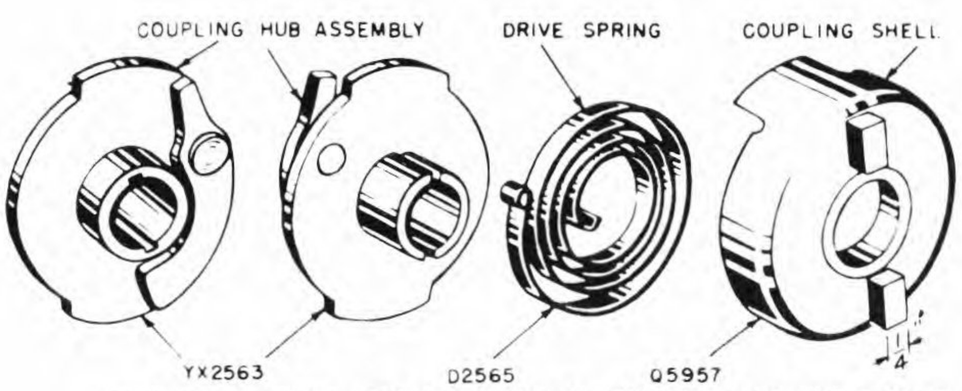

TYPE UA IMPULSE COUPLING COMPLETE - TY2563C - LUG ANGLE 0° - CW

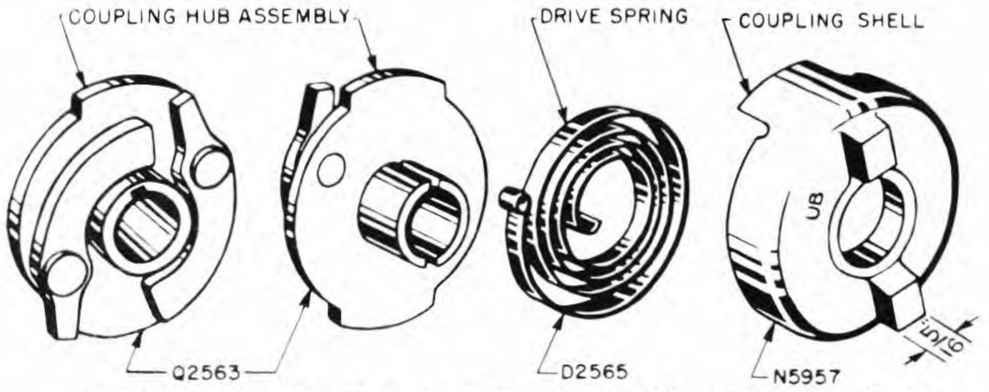

TYPE UB IMPULSE COUPLING COMPLETE - Q2563C - LUG ANGLE 0° - CW

TYPE UB IMPULSE COUPLINGS

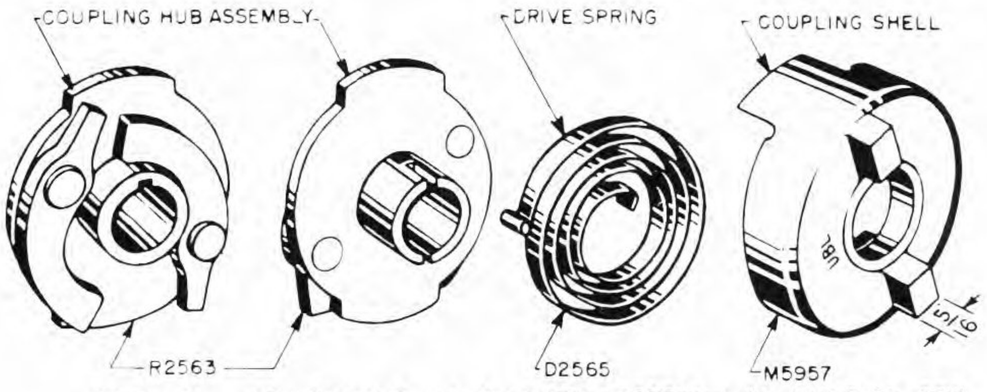

TYPE UBL IMPULSE COUPLING COMPLETE - R2563C - LUG ANGLE 0° - CCW

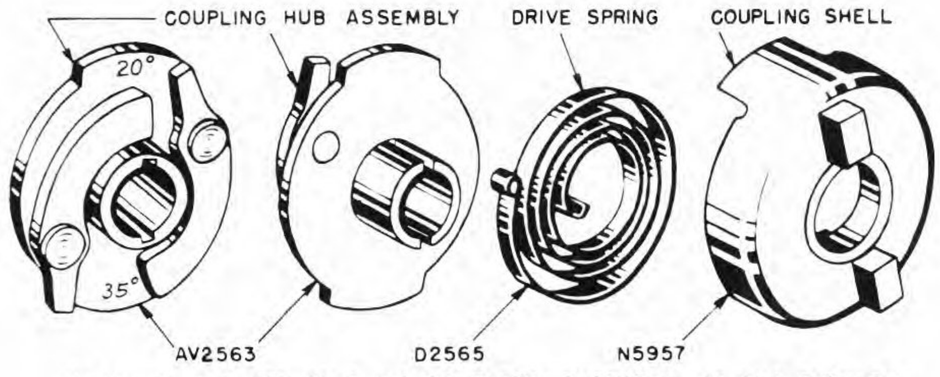

TYPE UB IMPULSE COUPLING COMPLETE - DV2563C - LUG ANGLE 0° - CW

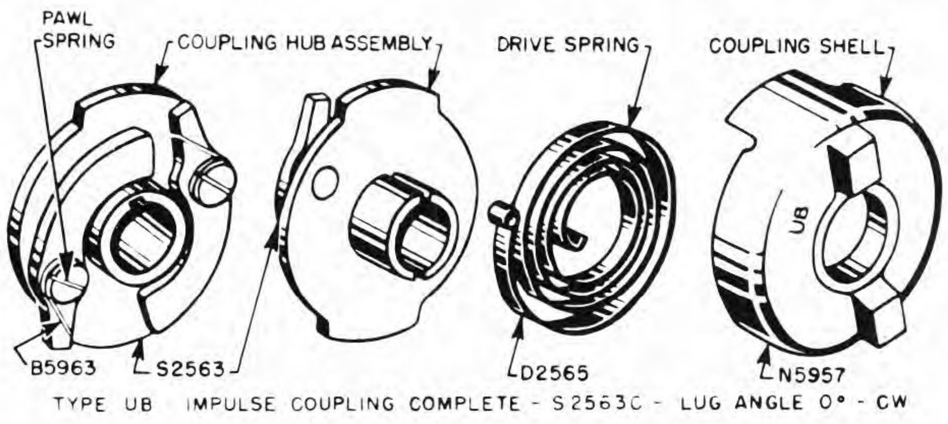

TYPE UB IMPULSE COUPLING COMPLETE - S2563C - LUG ANGLE 0° - CW

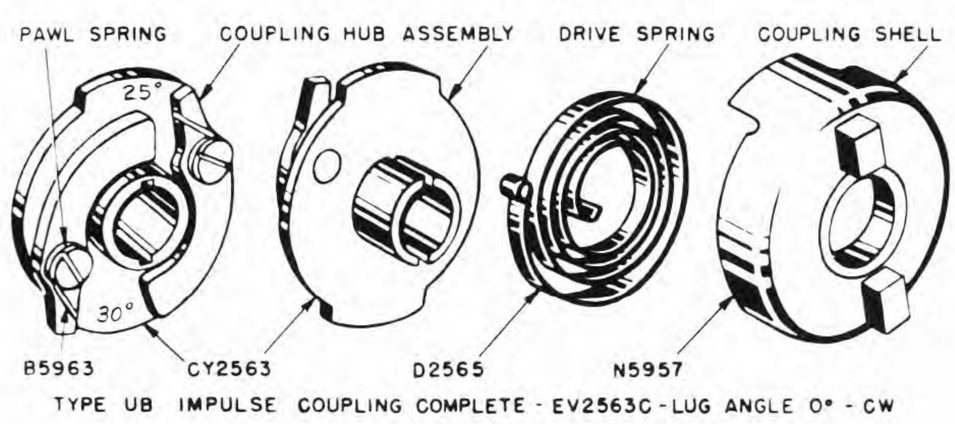

TYPE UB IMPULSE COUPLING COMPLETE - EV2563C - LUG ANGLE 0° - CW

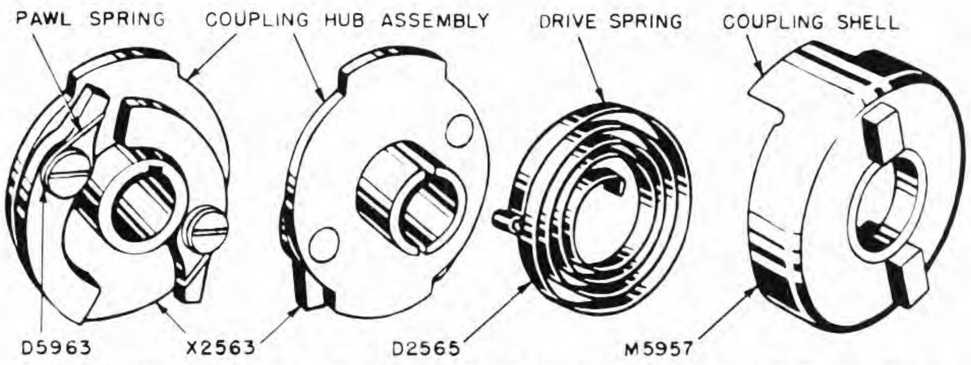

TYPE UBL IMPULSE COUPLING COMPLETE - X2563C - LUG ANGLE 0° - CCW

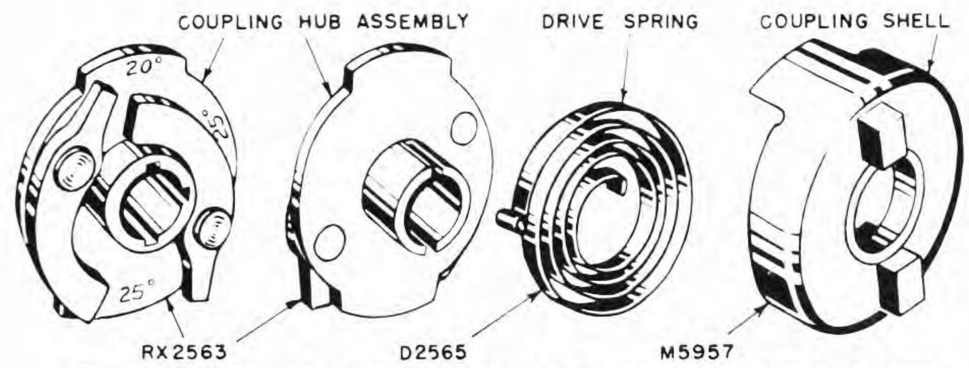

TYPE UBL IMPULSE COUPLING COMPLETE - FV2563C - LUG ANGLE 0° - CCW

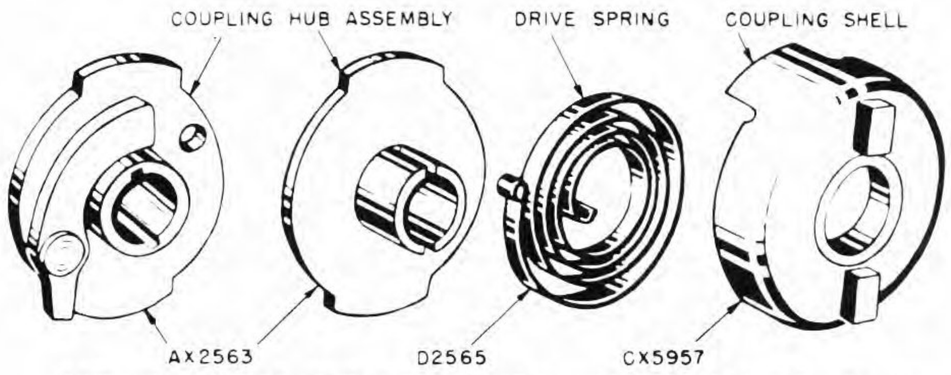

TYPE UB IMPULSE COUPLING COMPLETE - AV2563C - LUG ANGLE +15° - CW

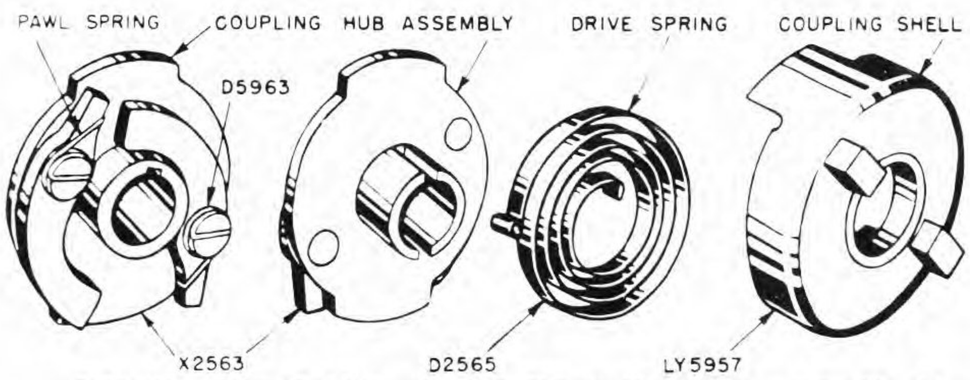

TYPE UBL IMPULSE COUPLING COMPLETE - GV2563C - LUG ANGLE +30° - CCW

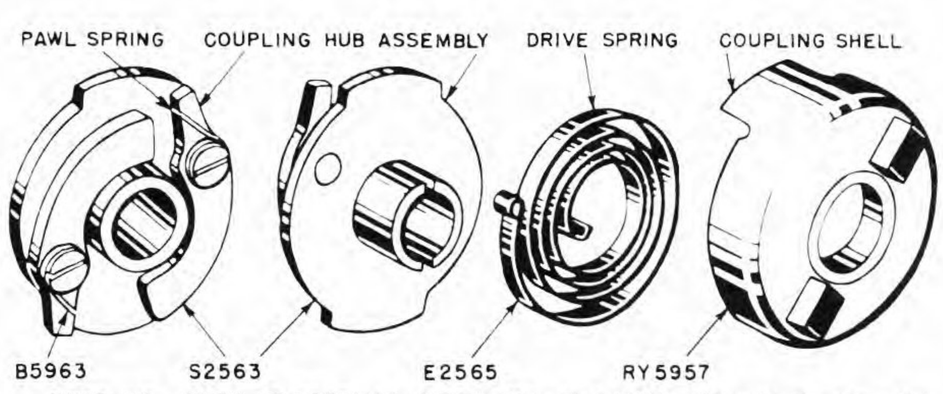

TYPE UB IMPULSE COUPLING COMPLETE - BV2563C - LUG ANGLE +48° - CW

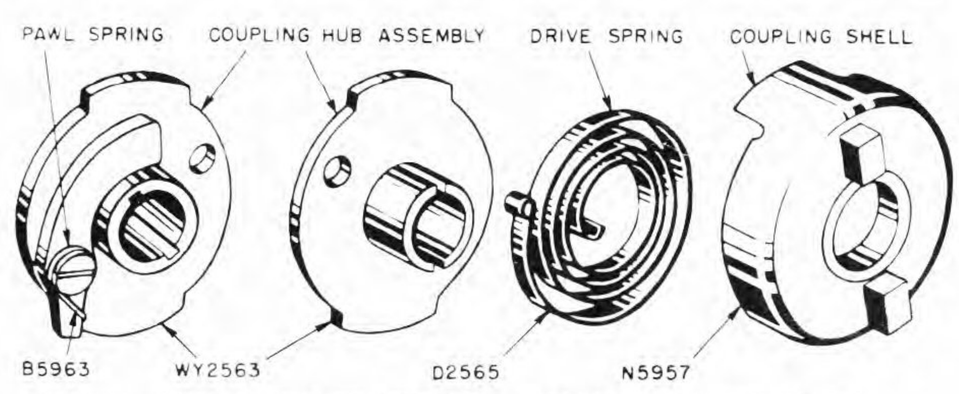

TYPE UB IMPULSE COUPLING COMPLETE - HV2563C - LUG ANGLE 0° - CW

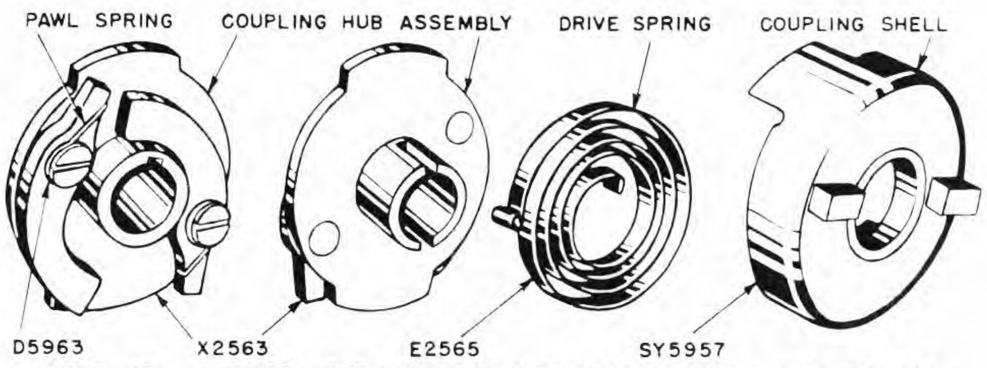

TYPE UBL IMPULSE COUPLING COMPLETE - CV2563C - LUG ANGLE +48° - CCW

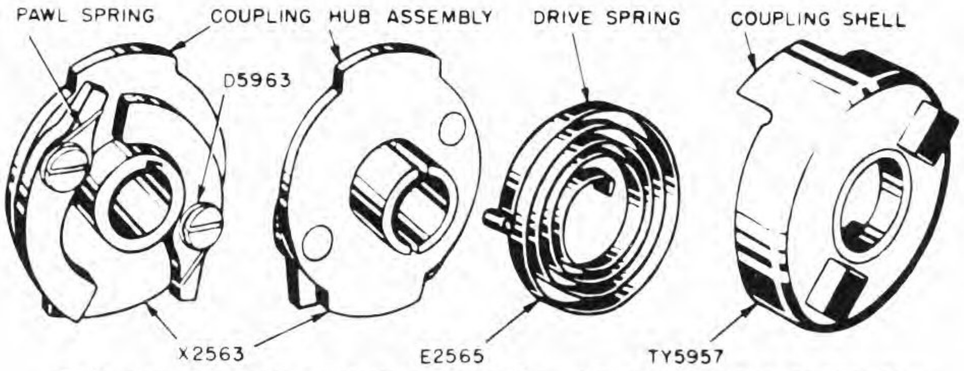

TYPE UBL IMPULSE COUPLING COMPLETE - JV2563C - LUG ANGLE - 50° - CCW

TYPE UB IMPULSE COUPLINGS

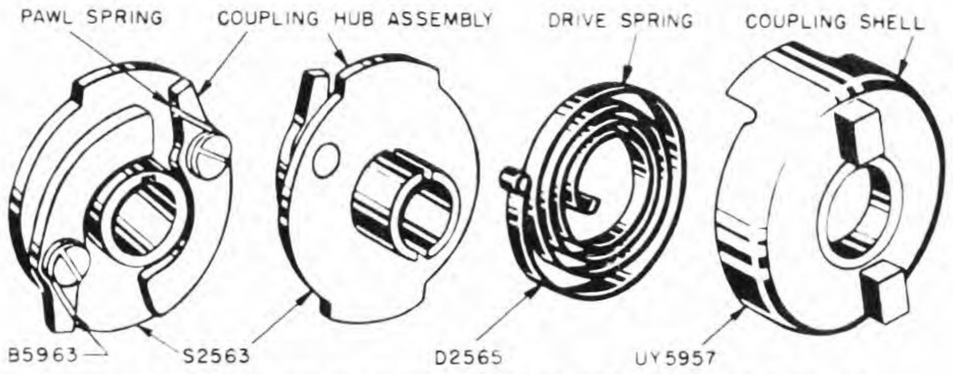

TYPE UB IMPULSE COUPLING COMPLETE - KV2563C - LUG ANGLE 0° - CW

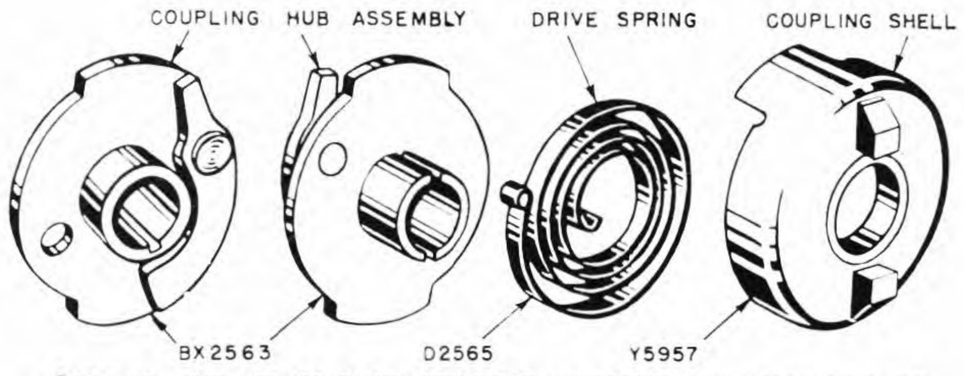

TYPE UB IMPULSE COUPLING COMPLETE - UV2563C - LUG ANGLE +10° - CW

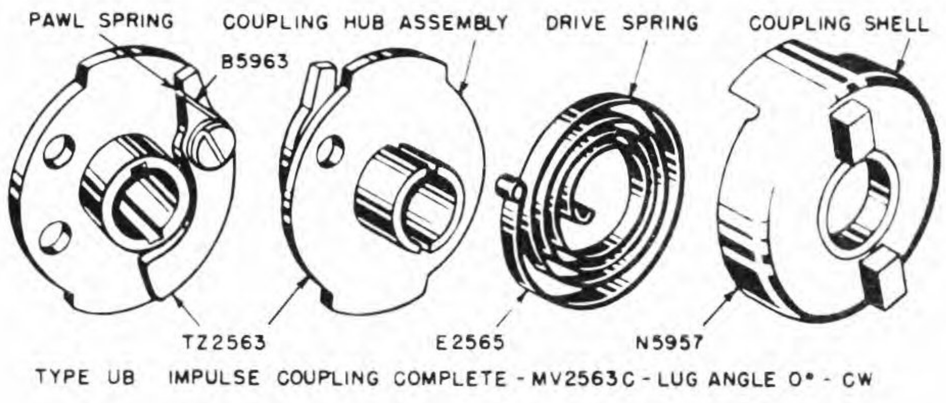

TYPE UB IMPULSE COUPLING COMPLETE - MV2563C - LUG ANGLE 0° - CW

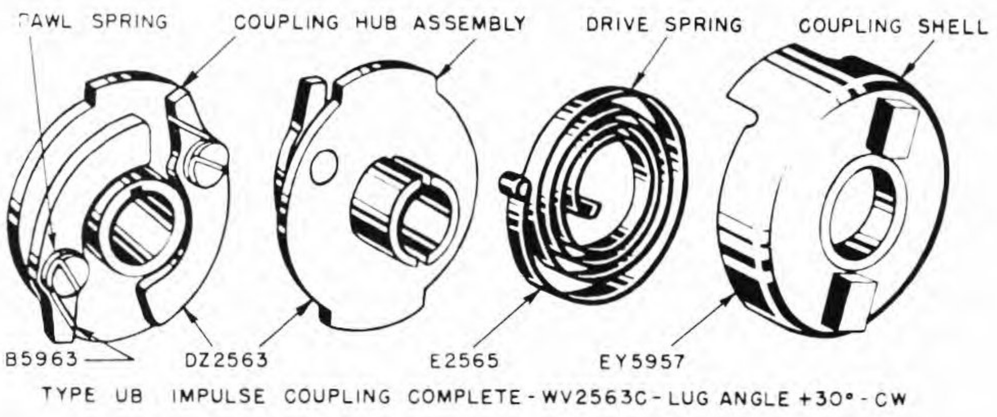

TYPE UB IMPULSE COUPLING COMPLETE - WV2563C - LUG ANGLE +30° - CW

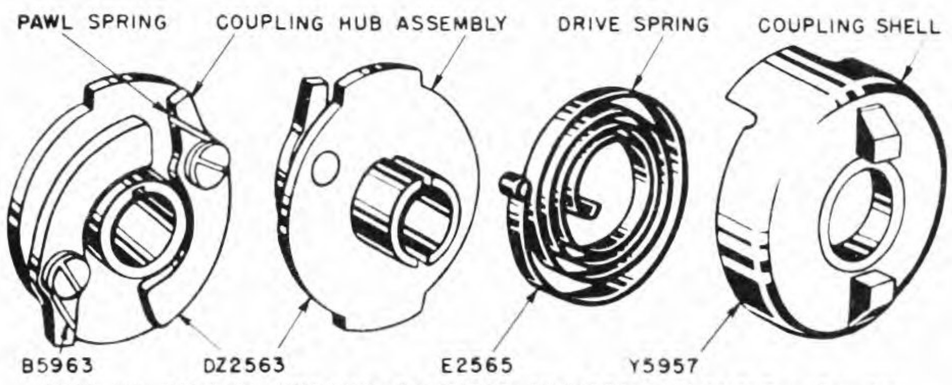

TYPE UB IMPULSE COUPLING COMPLETE - NV2563C - LUG ANGLE +10° - CW

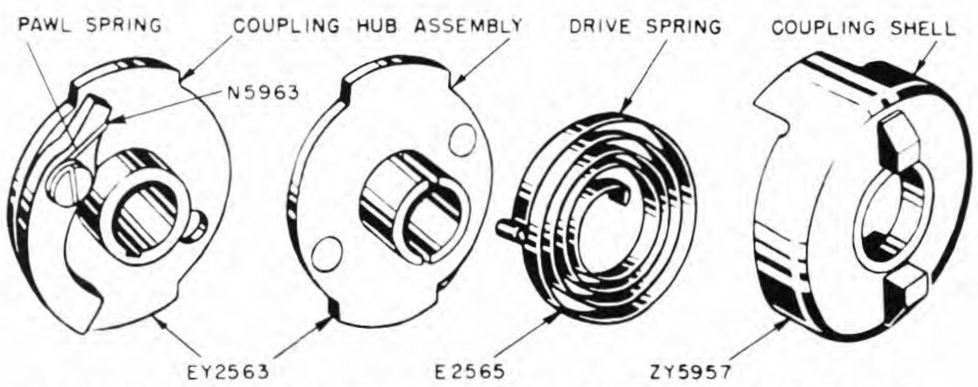

TYPE UBL IMPULSE COUPLING COMPLETE - XV2563C - LUG ANGLE -5° - CCW

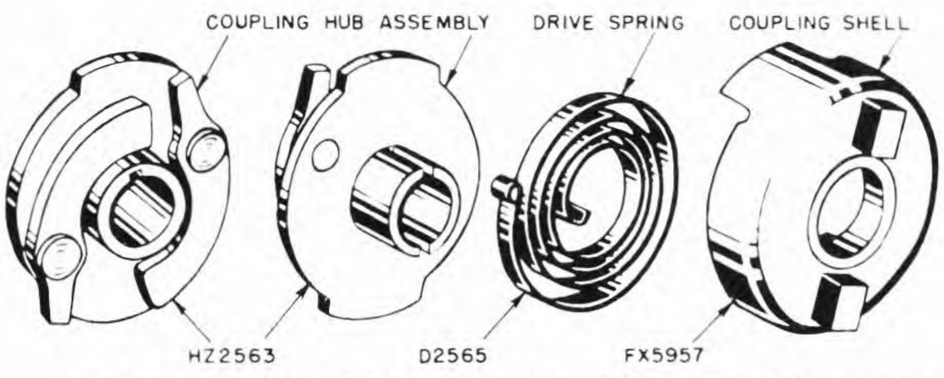

TYPE UB IMPULSE COUPLING COMPLETE - PV2563C - LUG ANGLE +35° - CW

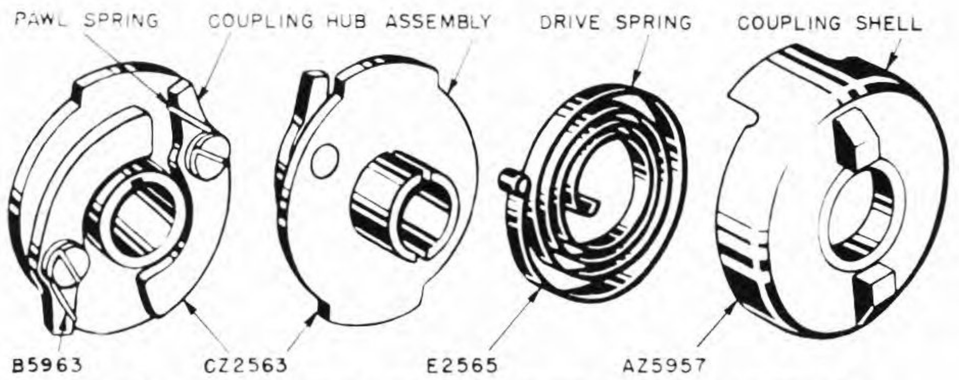

TYPE UB IMPULSE COUPLING COMPLETE - YV2563C - LUG ANGLE 0° - CW

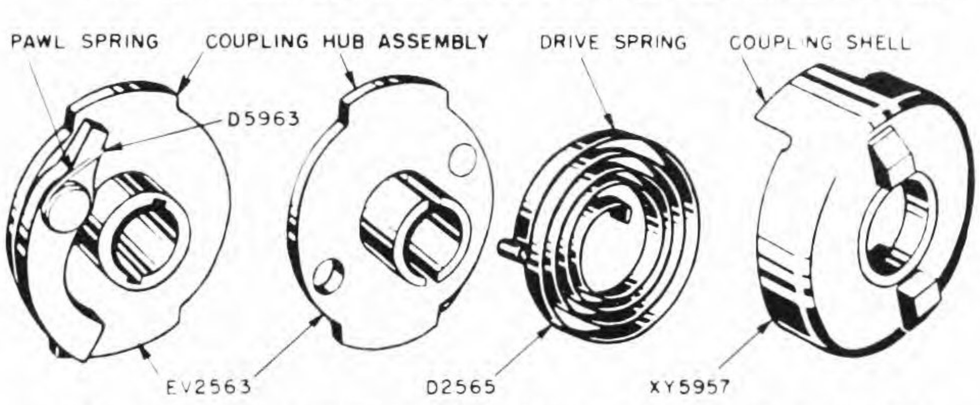

TYPE UBL IMPULSE COUPLING COMPLETE - QV2563C - LUG ANGLE 0° - CCW

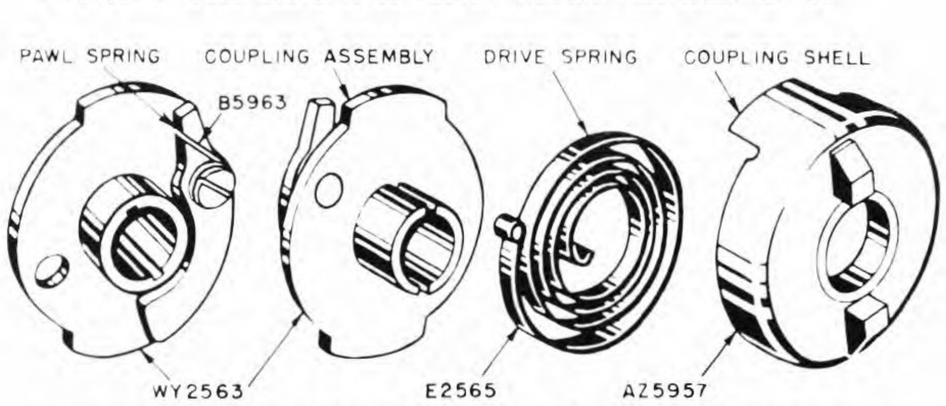

TYPE UB IMPULSE COUPLING COMPLETE - ZV2563C - LUG ANGLE 0° - CW

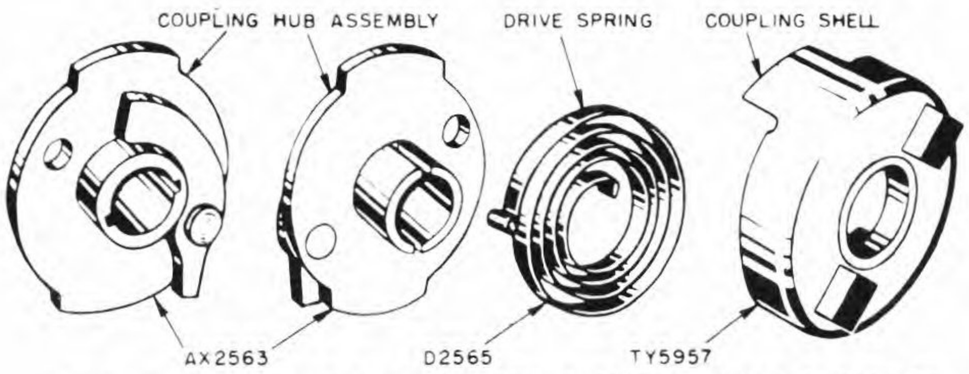

TYPE UBL IMPULSE COUPLING COMPLETE - RV2563C - LUG ANGLE -50° - CCW

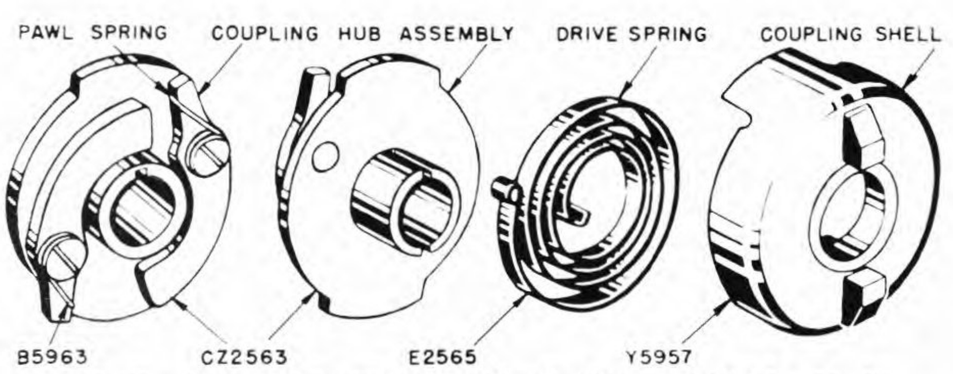

TYPE UB IMPULSE COUPLING COMPLETE - BW2563C - LUG ANGLE +10° - CW

TYPE UB IMPULSE COUPLINGS

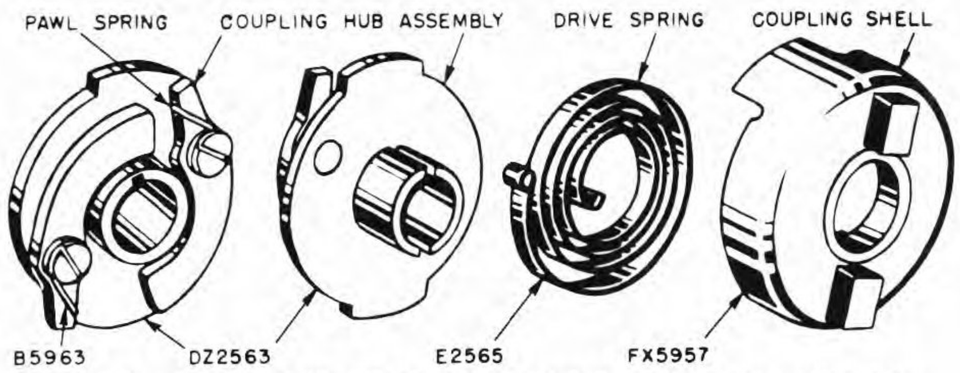

TYPE UB IMPULSE COUPLING COMPLETE - CW2563C - LUG ANGLE +35° - CW

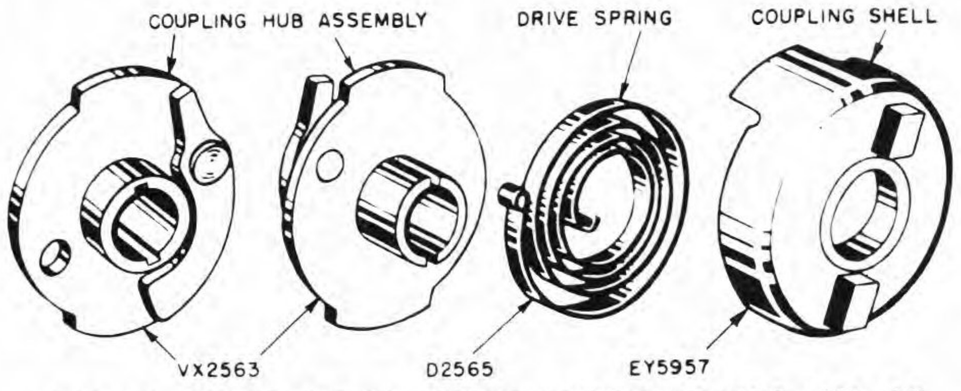

TYPE UB IMPULSE COUPLING COMPLETE - KW2563C - LUG ANGLE +30° - CW

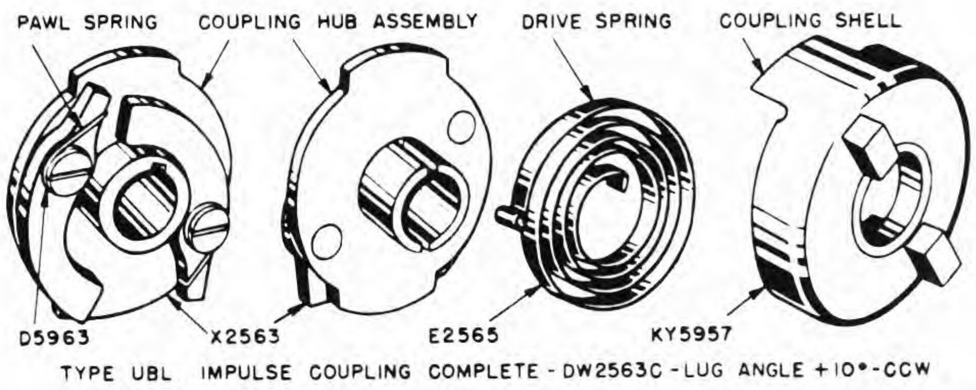

TYPE UBL IMPULSE COUPLING COMPLETE - DW2563C - LUG ANGLE +10° - CCW

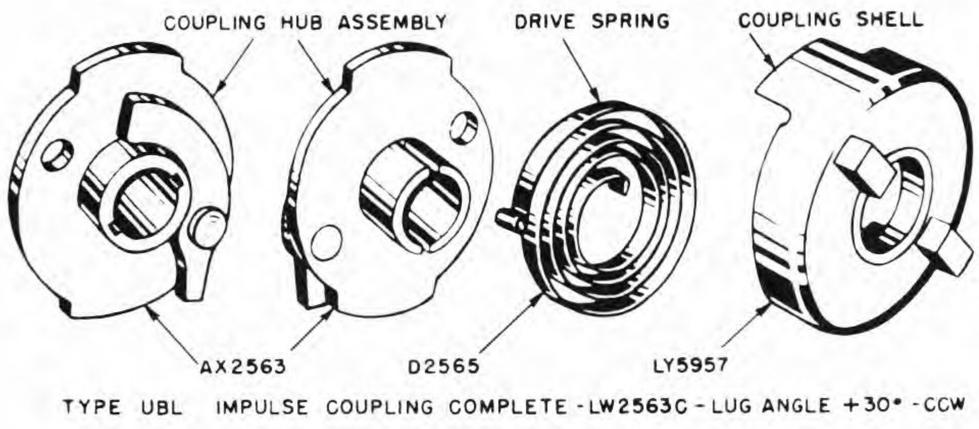

TYPE UBL IMPULSE COUPLING COMPLETE - LW2563C - LUG ANGLE +30° - CCW

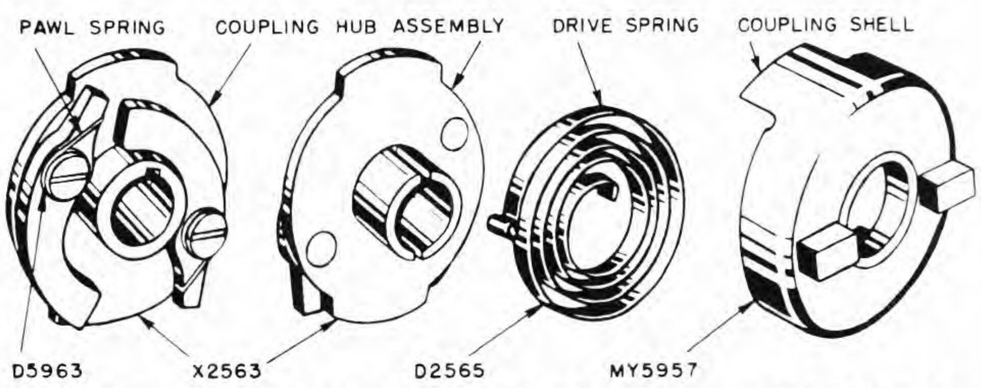

TYPE UBL IMPULSE COUPLING COMPLETE - EW2563C - LUG ANGLE +90° - CCW

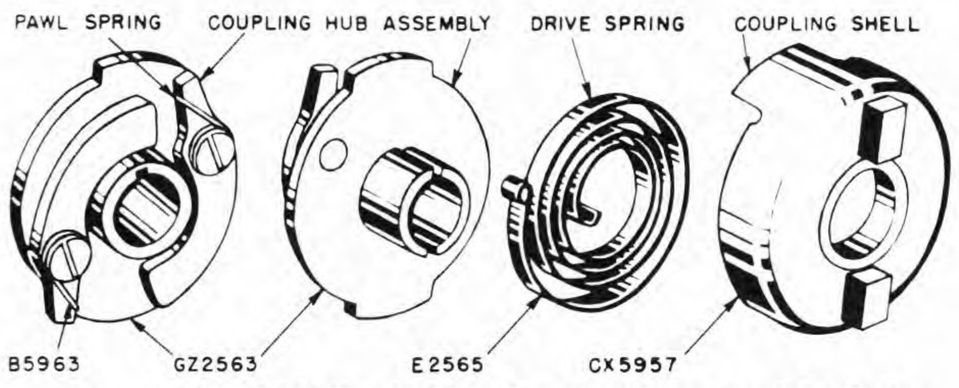

TYPE UB IMPULSE COUPLING COMPLETE - MW2563C - LUG ANGLE +15° CW

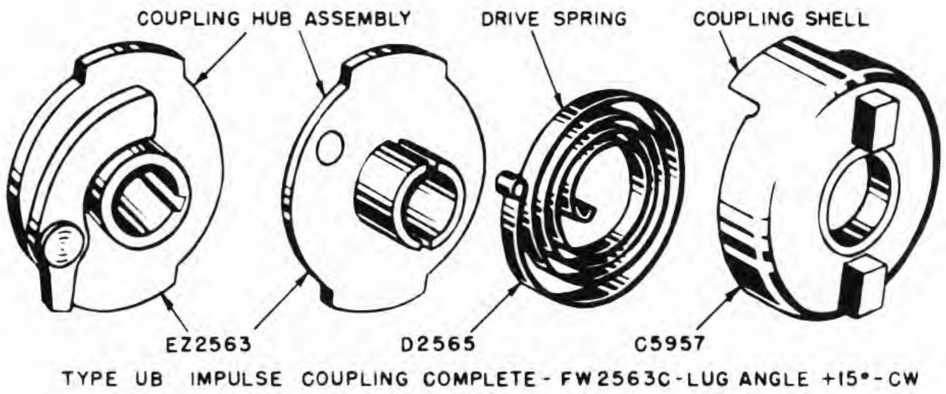

TYPE UB IMPULSE COUPLING COMPLETE - FW2563C - LUG ANGLE +15° - CW

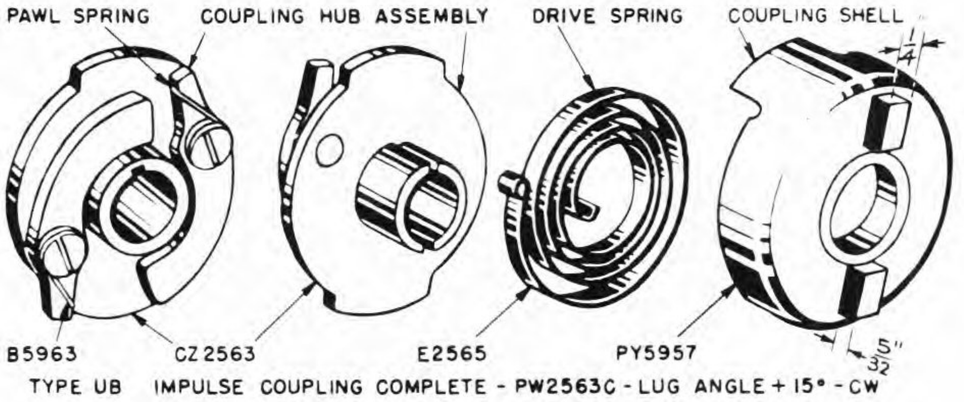

TYPE UB IMPULSE COUPLING COMPLETE - PW2563C - LUG ANGLE +15° - CW

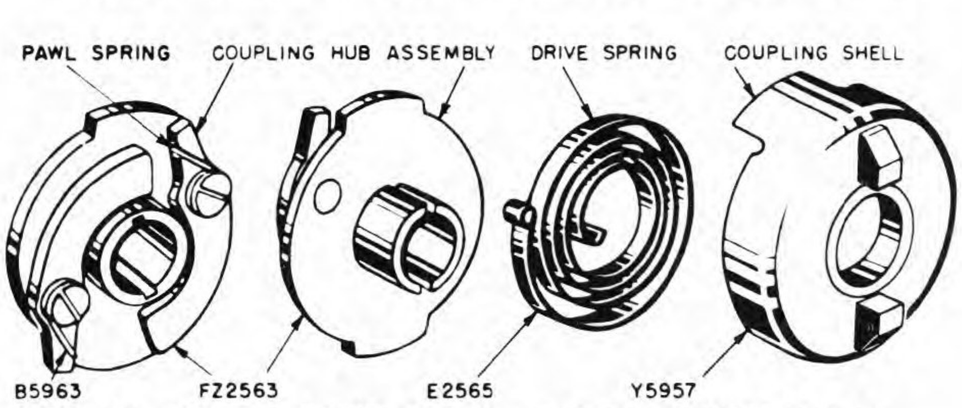

TYPE UB IMPULSE COUPLING COMPLETE - HW2563C - LUG ANGLE +10° - CW

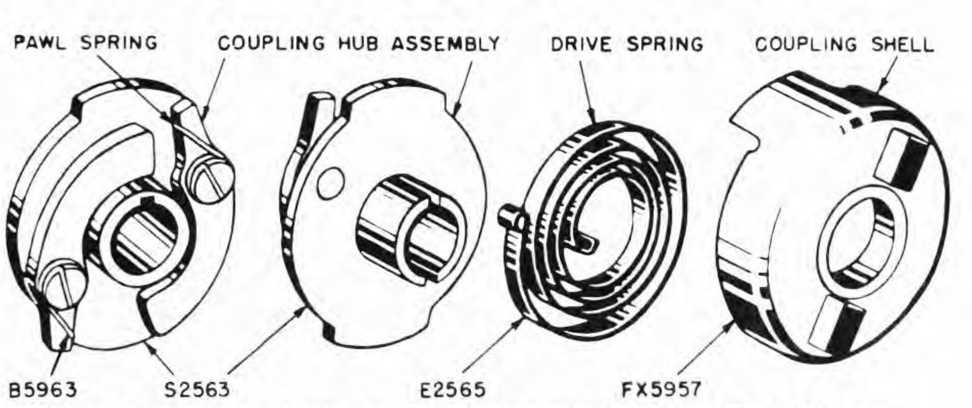

TYPE UB IMPULSE COUPLING COMPLETE - RW2563C - LUG ANGLE +35° - CW

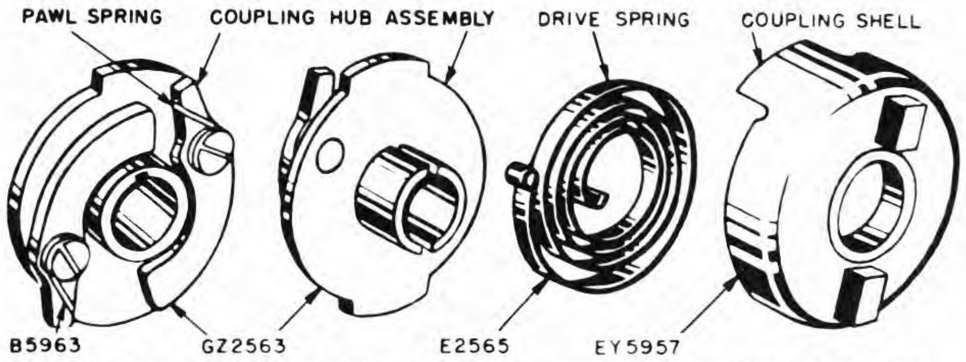

TYPE UB IMPULSE COUPLING COMPLETE - JW2563C - LUG ANGLE +30° - CW

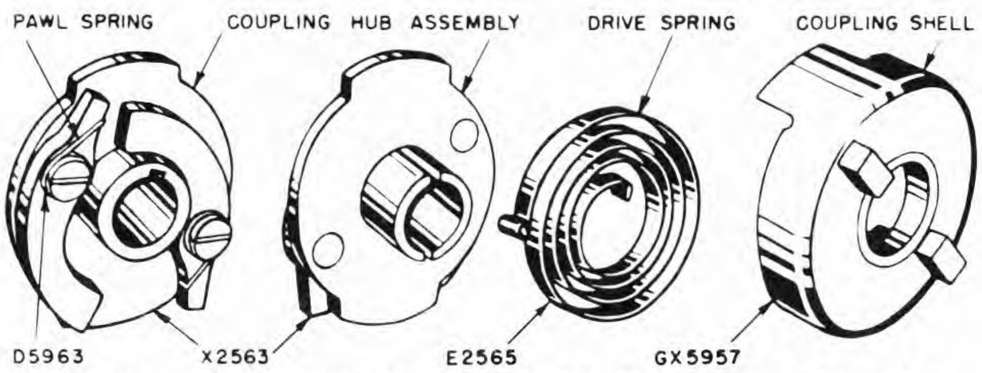

TYPE UBL IMPULSE COUPLING COMPLETE - SW2563C - LUG ANGLE +35° - CCW

TYPE UB IMPULSE COUPLINGS

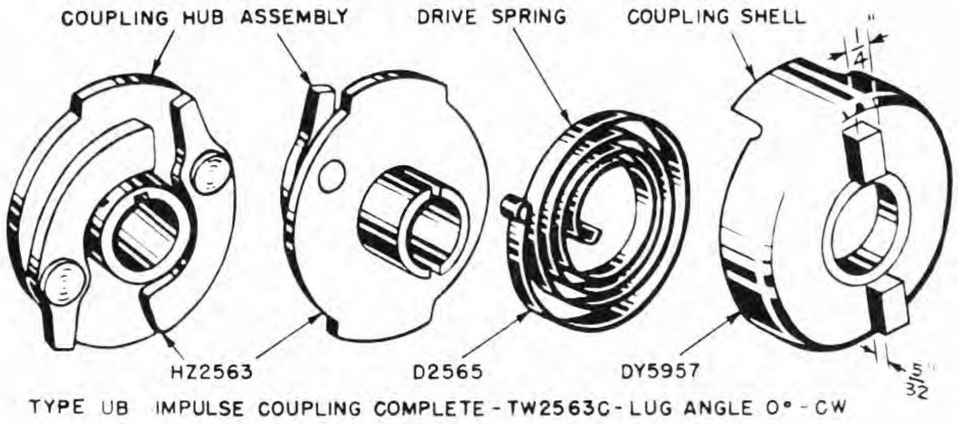

TYPE UB IMPULSE COUPLING COMPLETE - TW2563C - LUG ANGLE 0° - CW

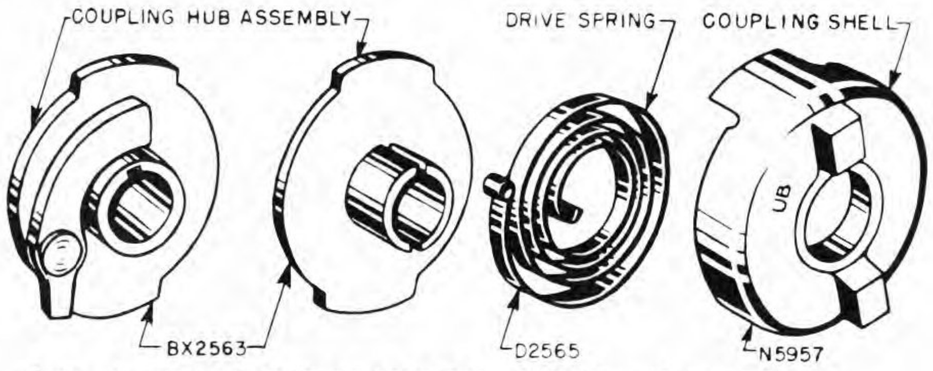

TYPE UB IMPULSE COUPLING COMPLETE - BX2563C - LUG ANGLE 0° - CW

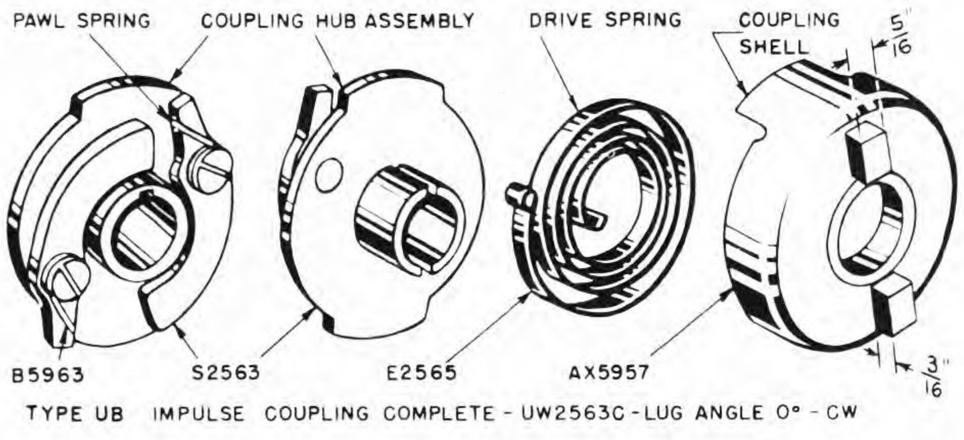

TYPE UB IMPULSE COUPLING COMPLETE - UW2563C - LUG ANGLE 0° - CW

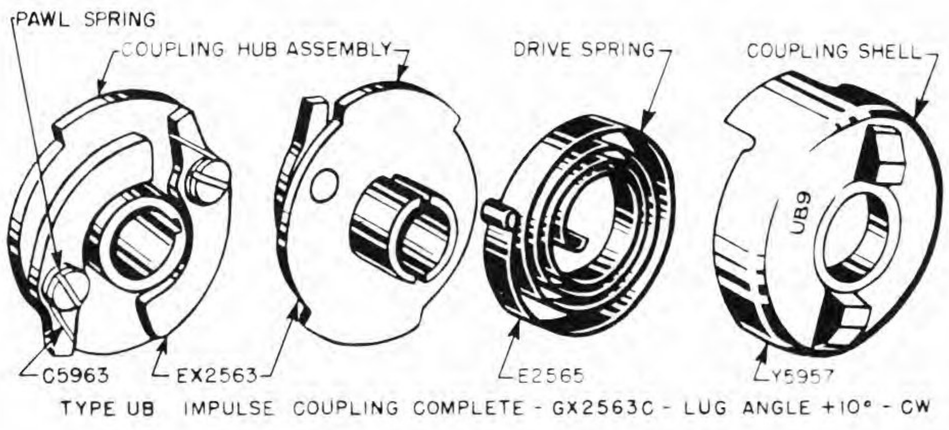

TYPE UB IMPULSE COUPLING COMPLETE - GX2563C - LUG ANGLE +10° - CW

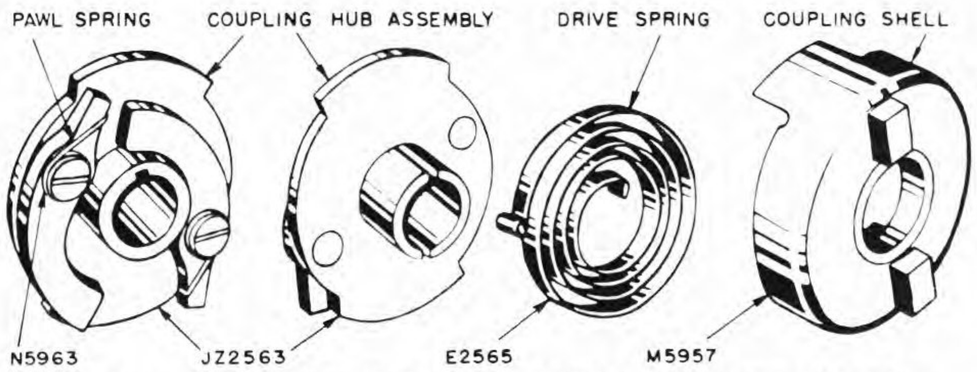

TYPE UBL IMPULSE COUPLING COMPLETE - VW2563C - LUG ANGLE 0° - CCW

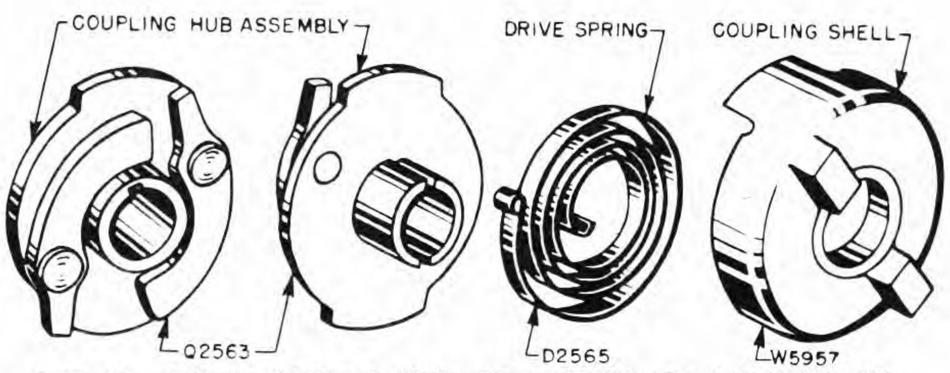

TYPE UB IMPULSE COUPLING COMPLETE - HX2563C - LUG ANGLE -10° - CW

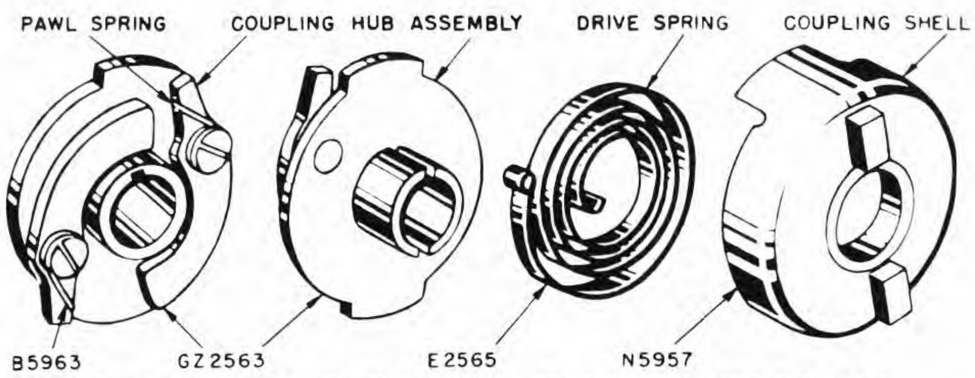

TYPE UB IMPULSE COUPLING COMPLETE - WW2563C - LUG ANGLE 0° - CW

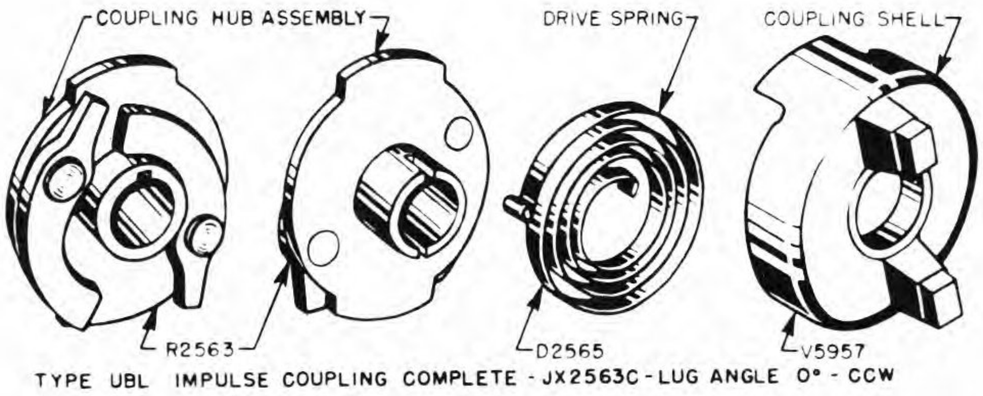

TYPE UBL IMPULSE COUPLING COMPLETE - JX2563C - LUG ANGLE 0° - CCW

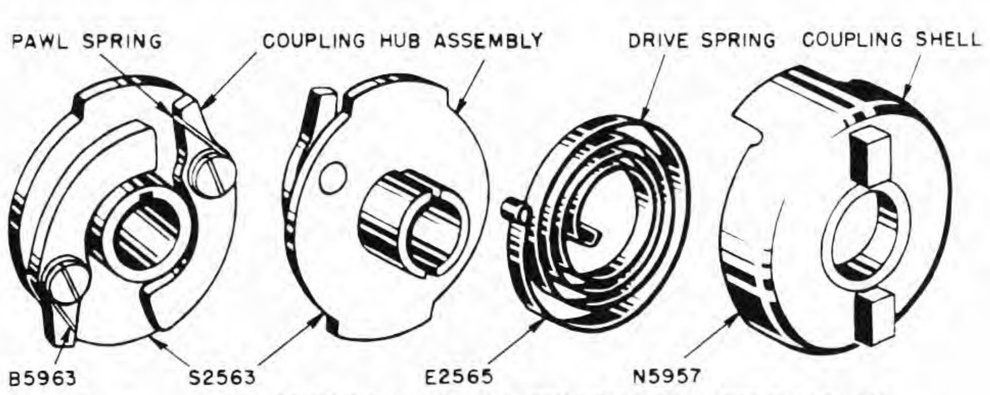

TYPE UB IMPULSE COUPLING COMPLETE - YW2563C - LUG ANGLE +5° - CW

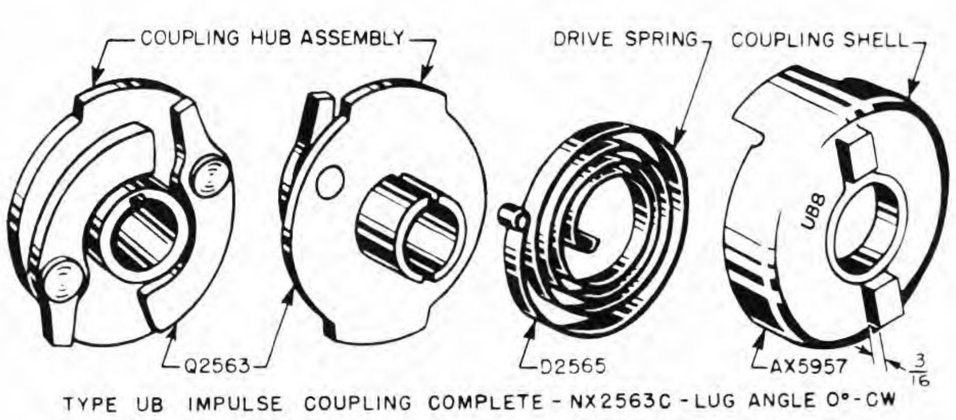

TYPE UB IMPULSE COUPLING COMPLETE - NX2563C - LUG ANGLE 0° - CW

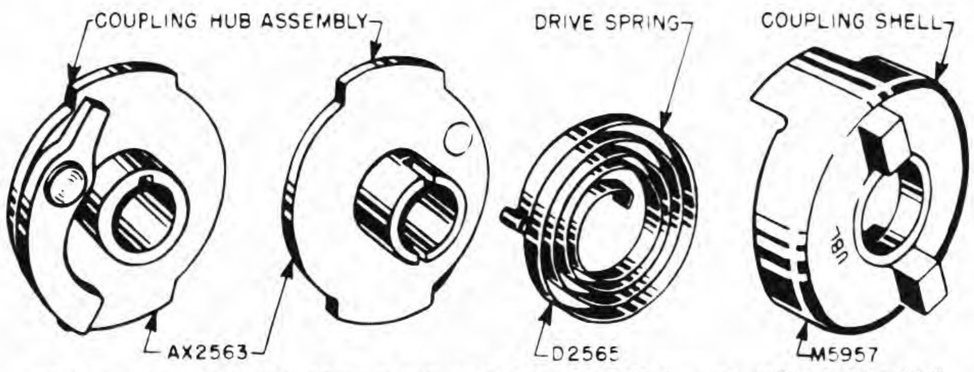

TYPE UBL IMPULSE COUPLING COMPLETE - AX2563C - LUG ANGLE 0° - CCW

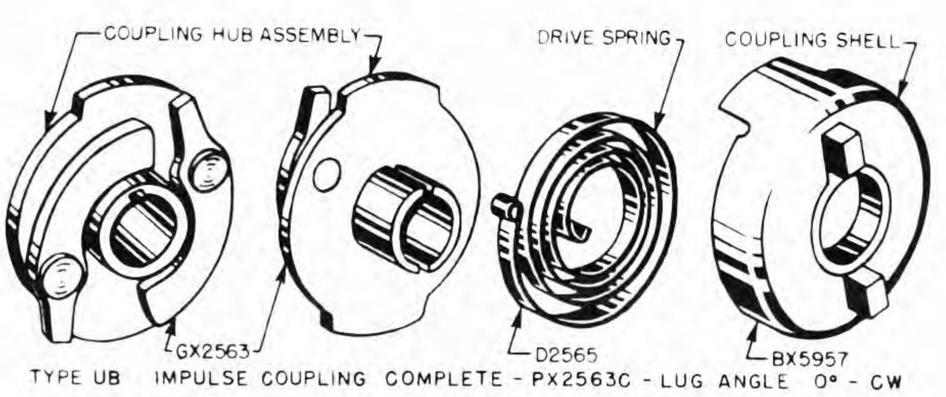

TYPE UB IMPULSE COUPLING COMPLETE - PX2563C - LUG ANGLE 0° - CW

TYPE UB IMPULSE COUPLINGS

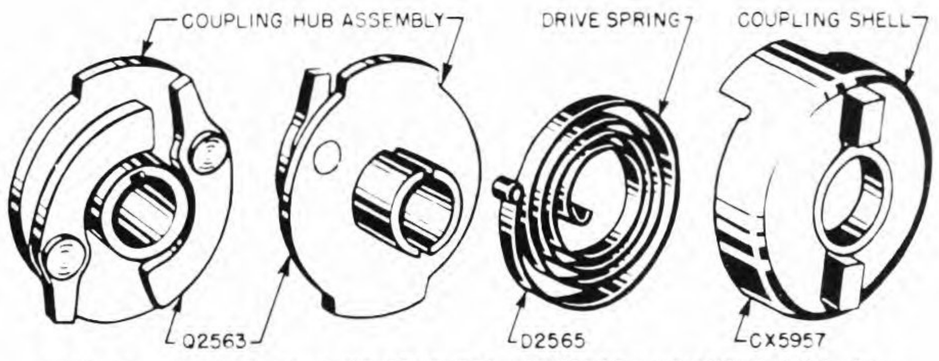

TYPE UB IMPULSE COUPLING COMPLETE - QX2563C - LUG ANGLE + 15° - CW

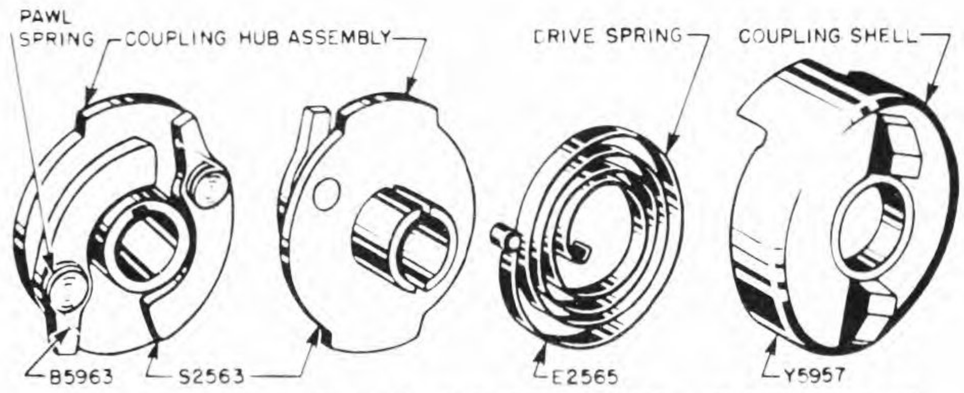

TYPE UB IMPULSE COUPLING COMPLETE - WX2563C - LUG ANGLE +10° - CW

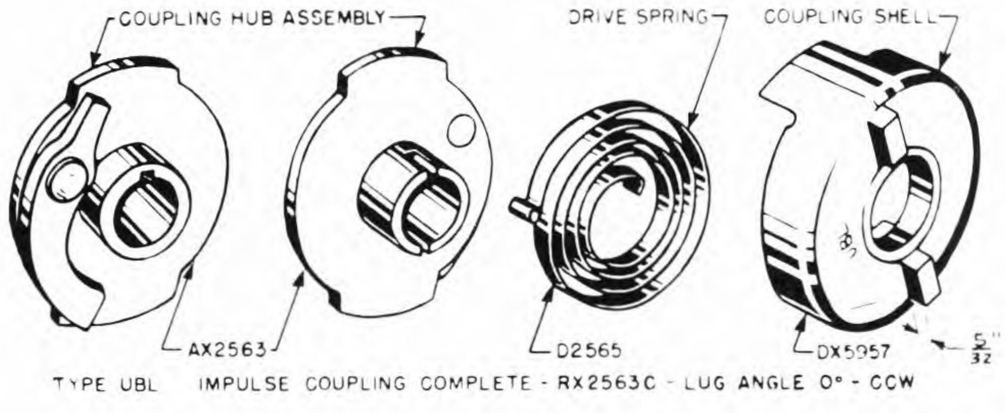

TYPE UBL IMPULSE COUPLING COMPLETE - RX2563C - LUG ANGLE 0° - CCW

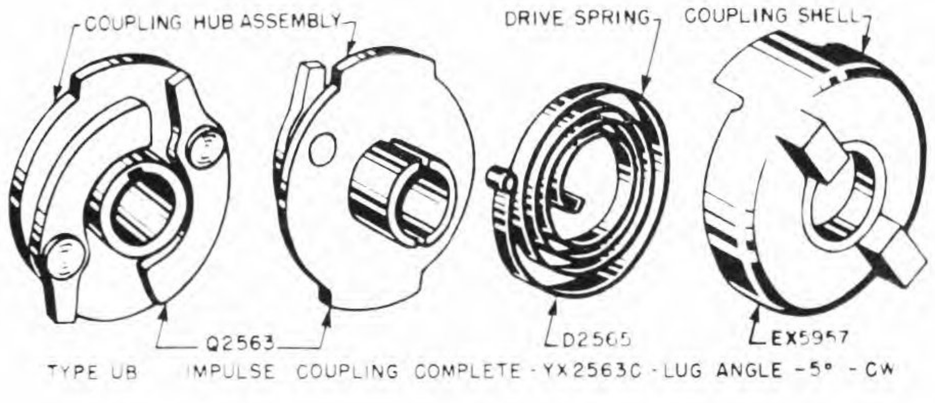

TYPE UB IMPULSE COUPLING COMPLETE - YX2563C - LUG ANGLE -5° - CW

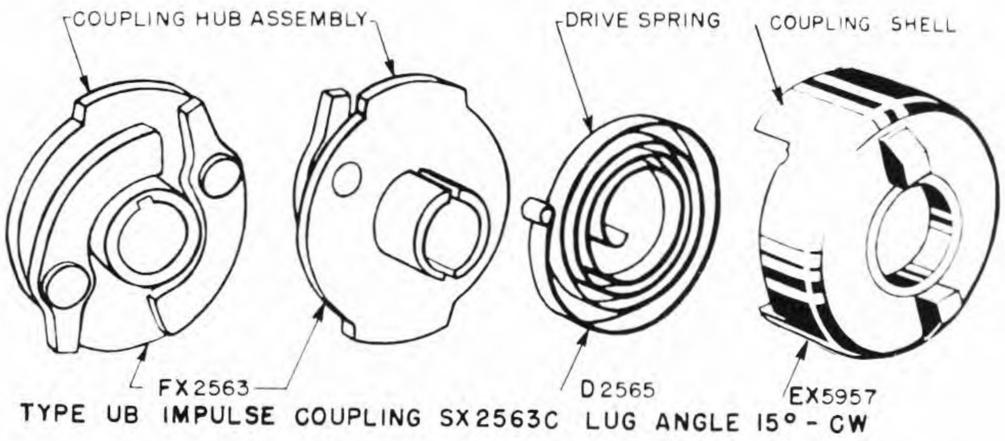

TYPE UB IMPULSE COUPLING SX2563C LUG ANGLE 15° - CW

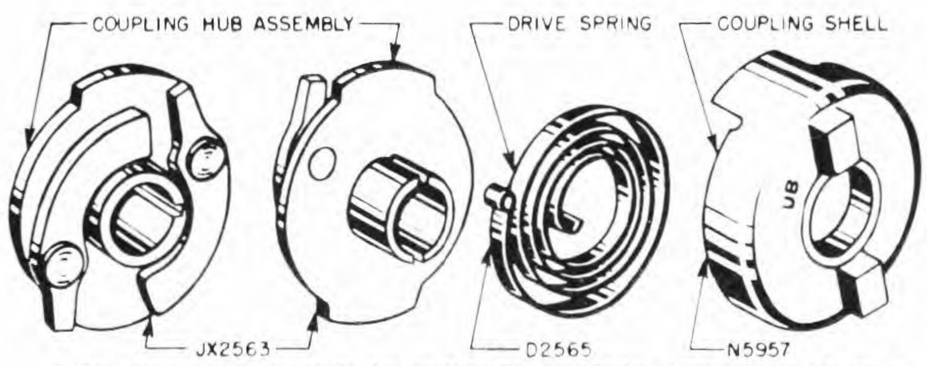

TYPE UB IMPULSE COUPLING COMPLETE - AY2563C - LUG ANGLE 0° - CW

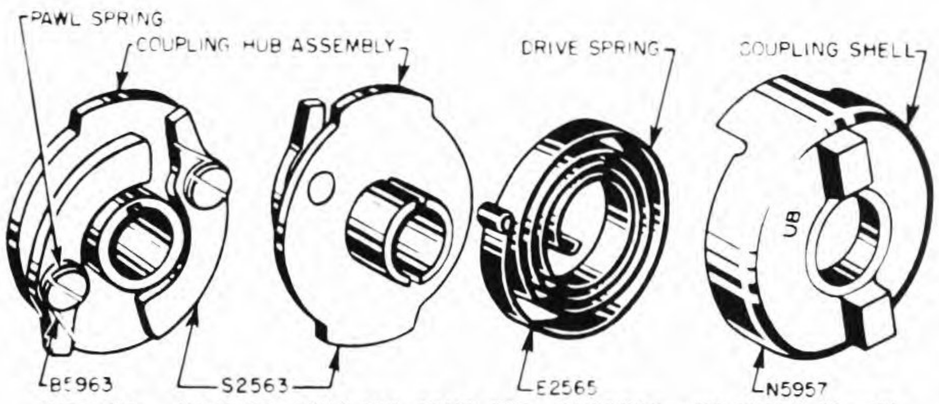

TYPE UB IMPULSE COUPLING COMPLETE - TX2563C - LUG ANGLE 0° - CW

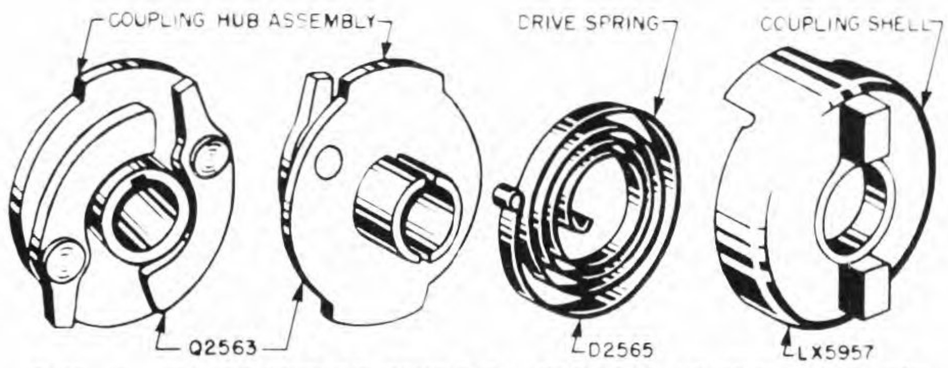

TYPE UB IMPULSE COUPLING COMPLETE - BY2563C - LUG ANGLE +25° - CW

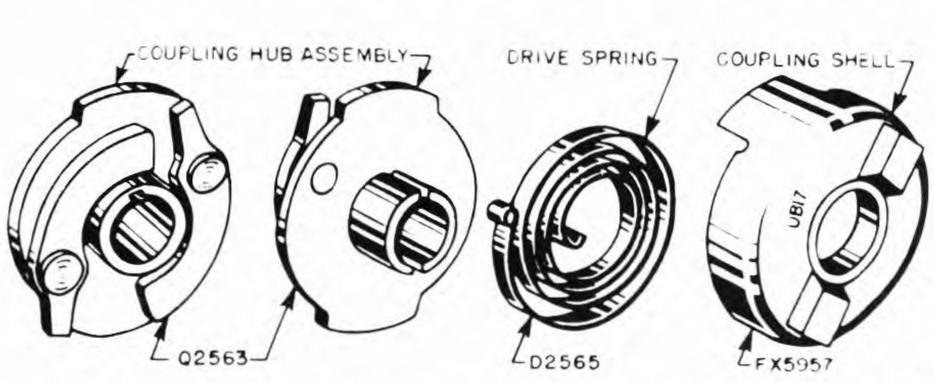

TYPE UB IMPULSE COUPLING COMPLETE - UX2563C - LUG ANGLE + 35° CW

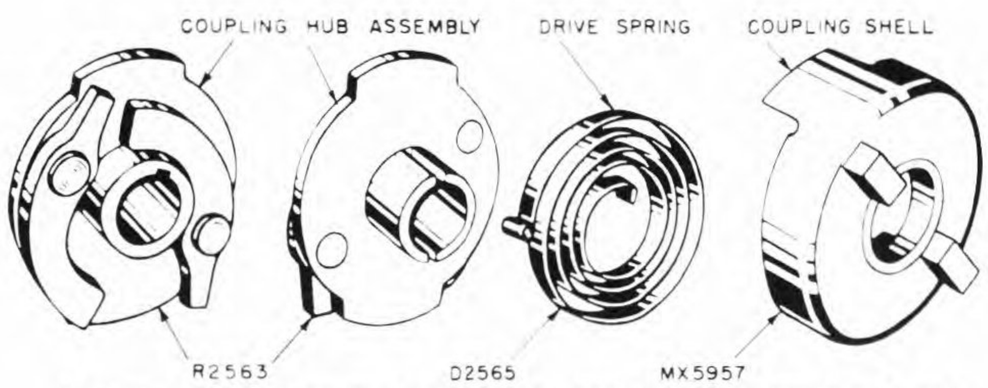

TYPE UBL IMPULSE COUPLING COMPLETE - FY2563C - LUG ANGLE +15° - CCW

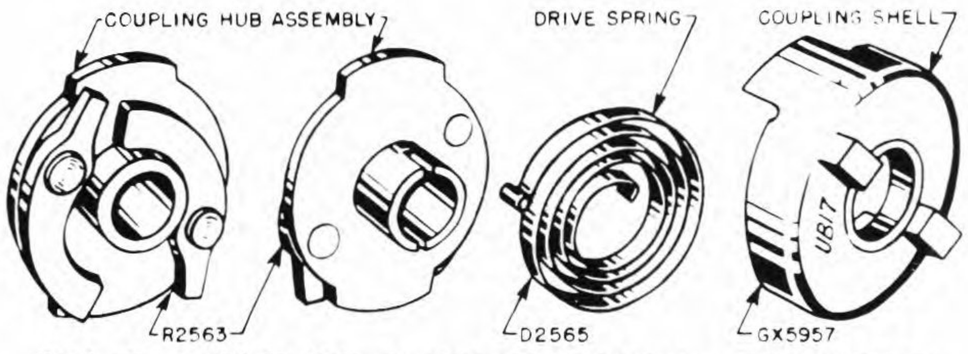

TYPE UBL IMPULSE COUPLING COMPLETE - VX2563C - LUG ANGLE +35° - CCW

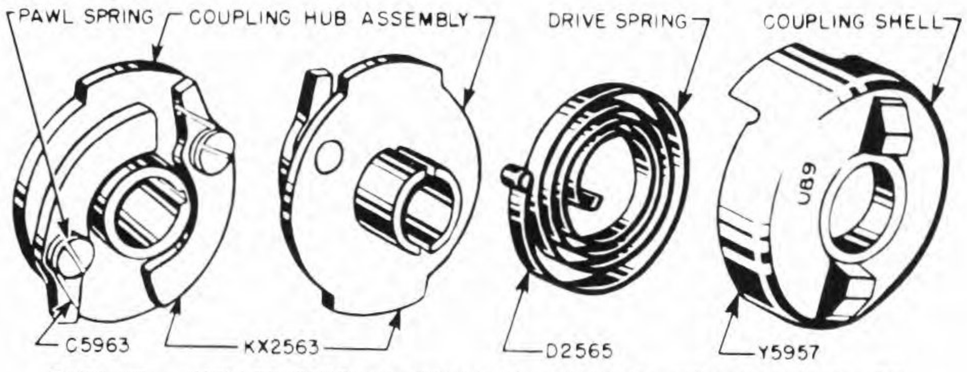

TYPE UB IMPULSE COUPLING COMPLETE - GY2563C - LUG ANGLE +10° - CW

TYPE UB IMPULSE COUPLINGS

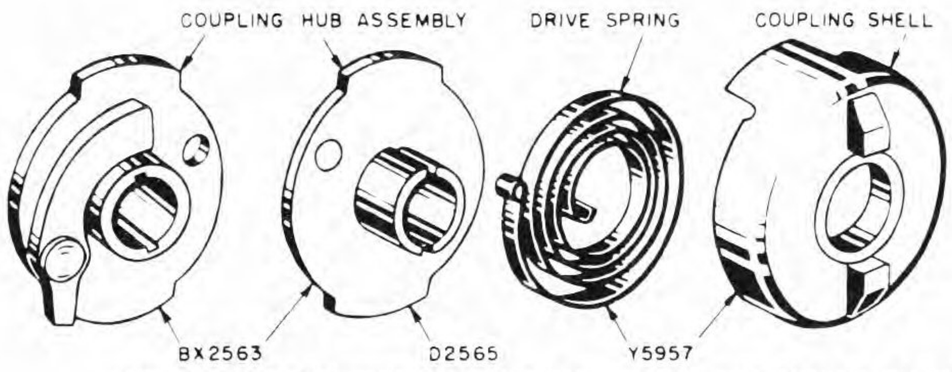

TYPE UB IMPULSE COUPLING COMPLETE - LY2563C - LUG ANGLE +10° - CW

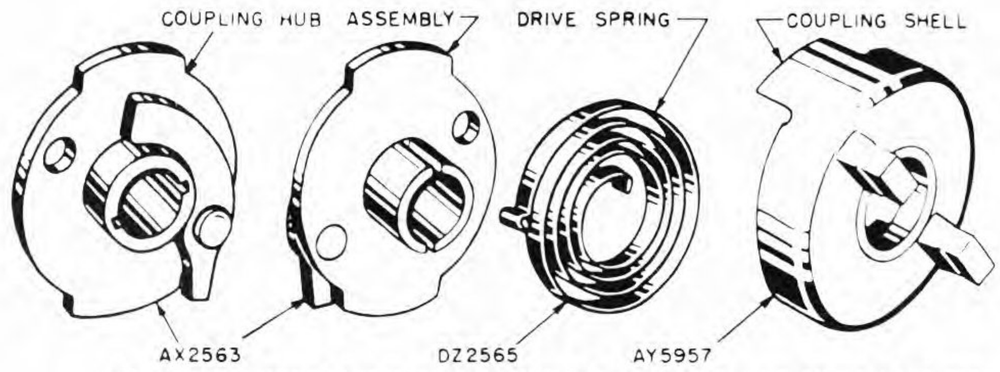

TYPE UBL IMPULSE COUPLING COMPLETE - ZY2563C - LUG ANGLE +30° - CCW

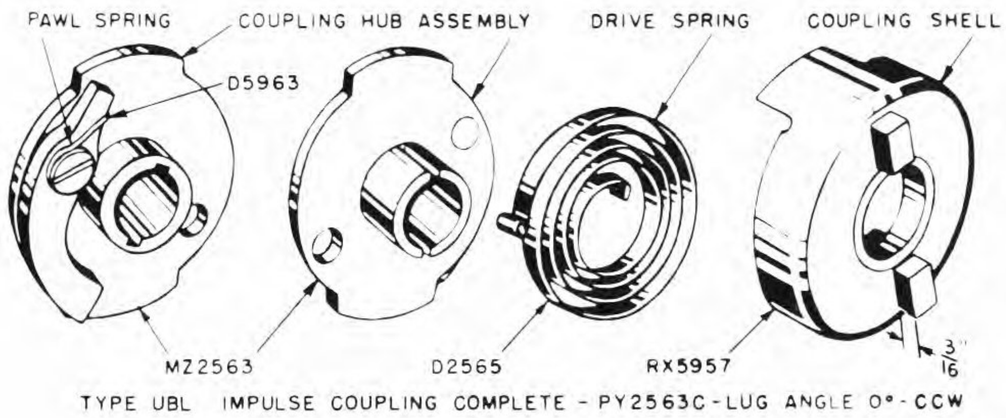

TYPE UBL IMPULSE COUPLING COMPLETE - PY2563C - LUG ANGLE 0° - CCW

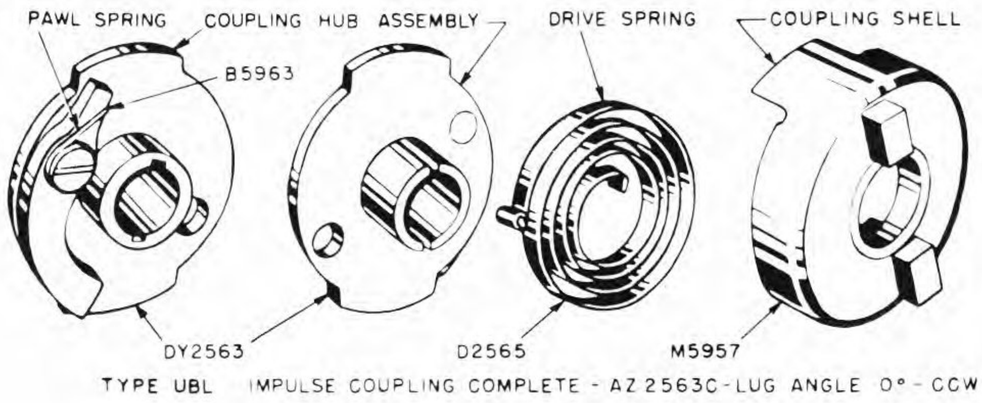

TYPE UBL IMPULSE COUPLING COMPLETE - AZ2563C - LUG ANGLE 0° - CCW

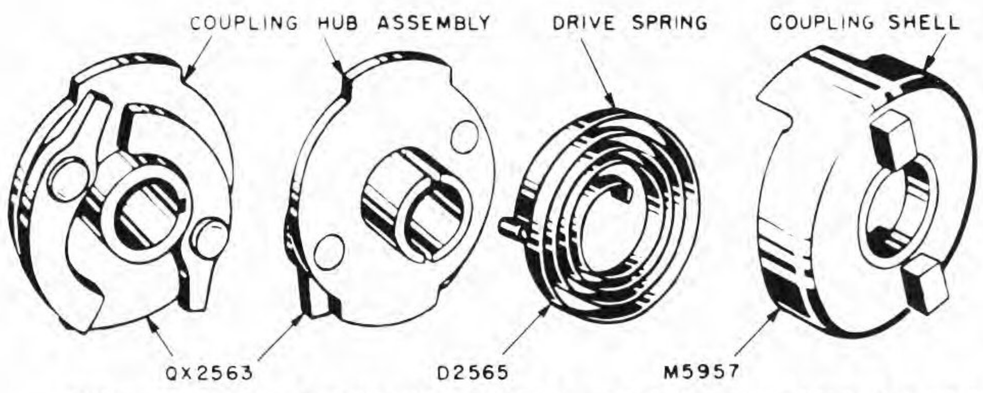

TYPE UBL IMPULSE COUPLING COMPLETE - QY2563C - LUG ANGLE 0° - CCW

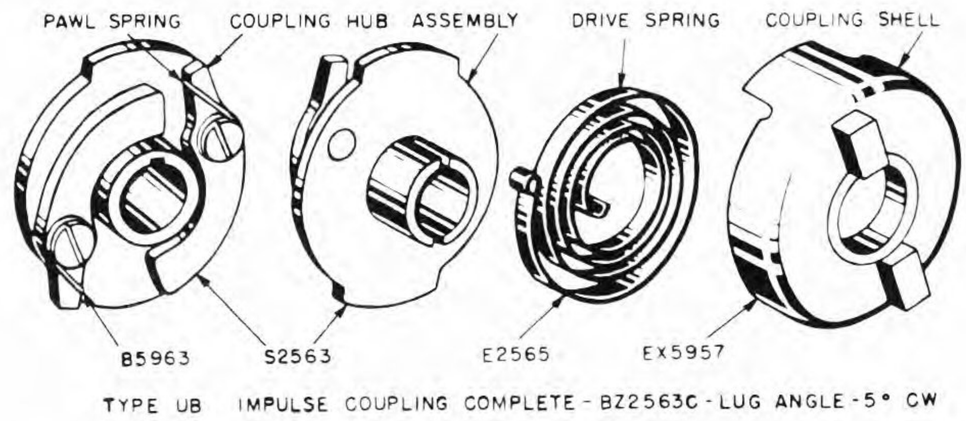

TYPE UB IMPULSE COUPLING COMPLETE - BZ2563C - LUG ANGLE -5° CW

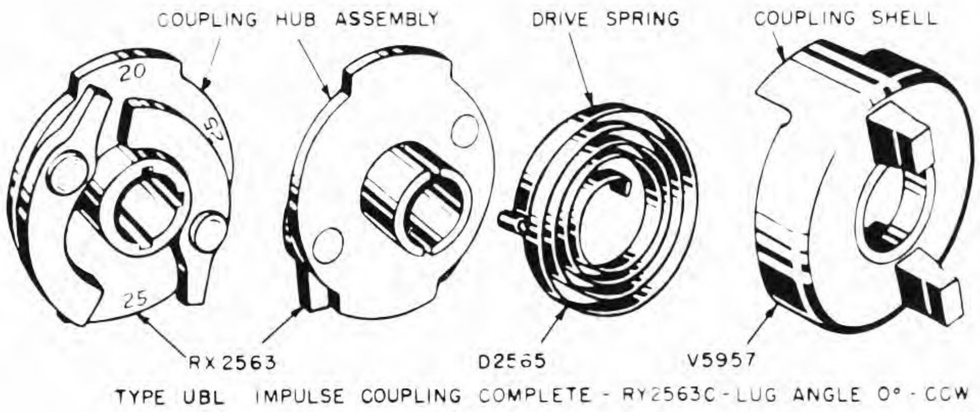

TYPE UBL IMPULSE COUPLING COMPLETE - RY2563C - LUG ANGLE 0° - CCW

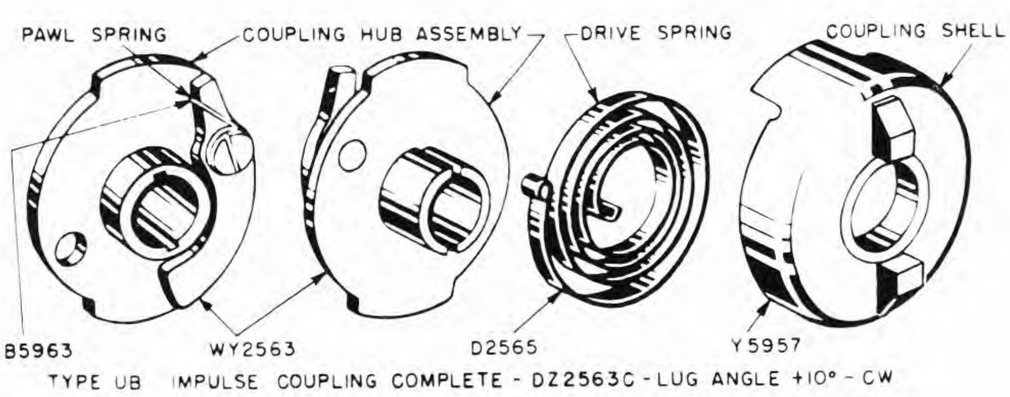

TYPE UB IMPULSE COUPLING COMPLETE - DZ2563C - LUG ANGLE +10° - CW

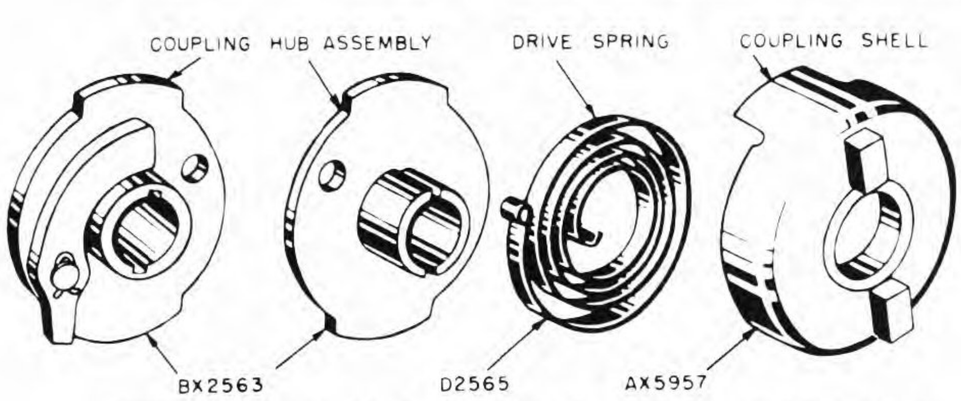

TYPE UB IMPULSE COUPLING COMPLETE - SY2563C - LUG ANGLE 0° - CW

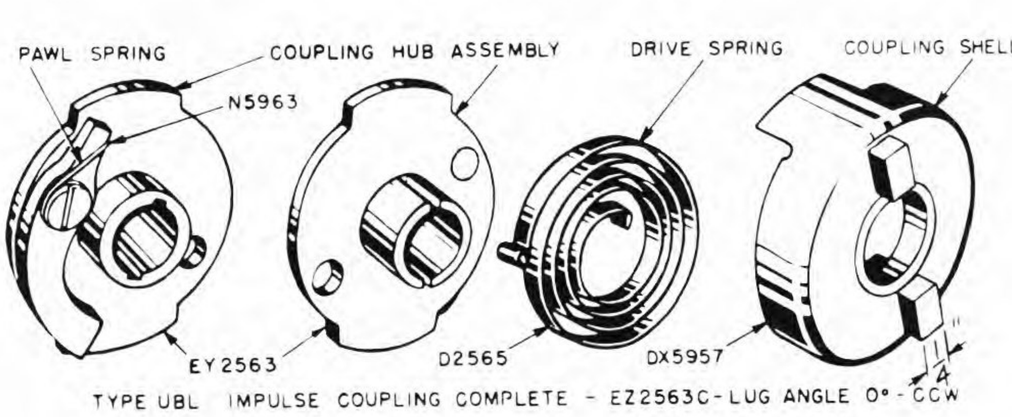

TYPE UBL IMPULSE COUPLING COMPLETE - EZ2563C - LUG ANGLE 0° - CCW

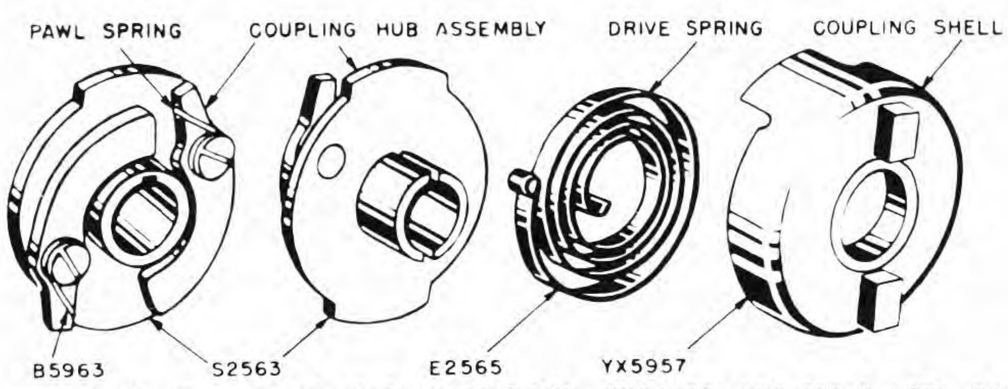

TYPE UB IMPULSE COUPLING COMPLETE - XY2563C - LUG ANGLE +20° - CW

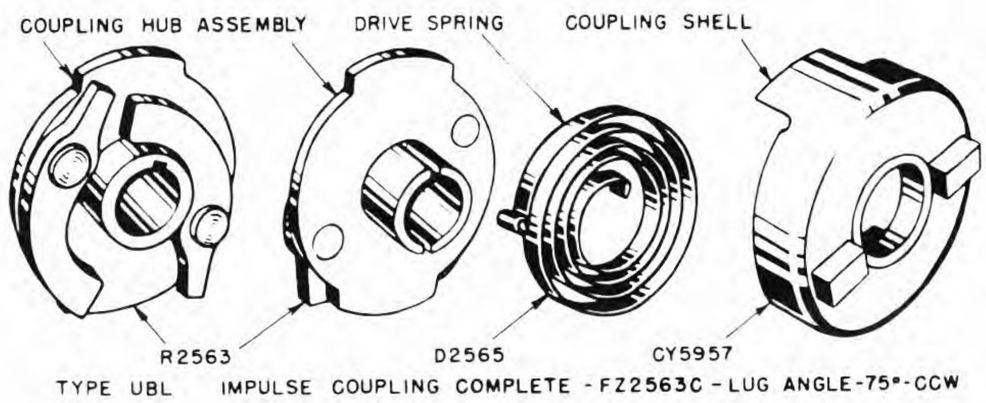

TYPE UBL IMPULSE COUPLING COMPLETE - FZ2563C - LUG ANGLE-75°-CCW

TYPE UB IMPULSE COUPLINGS

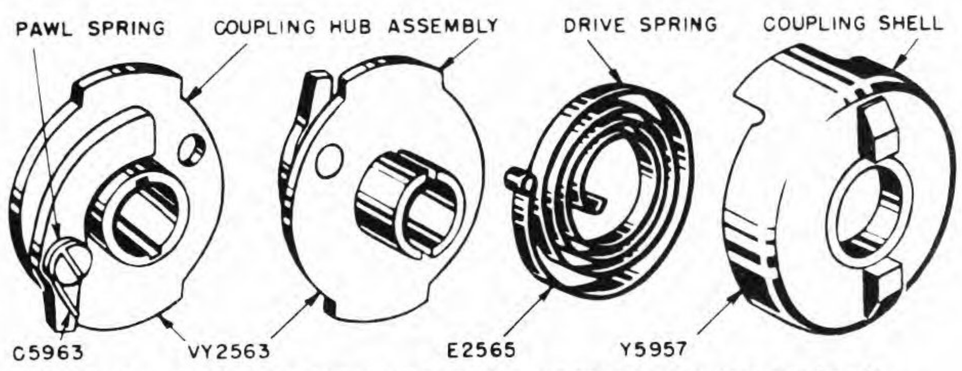

TYPE UB IMPULSE COUPLING COMPLETE - GZ2563C - LUG ANGLE +10° - CW

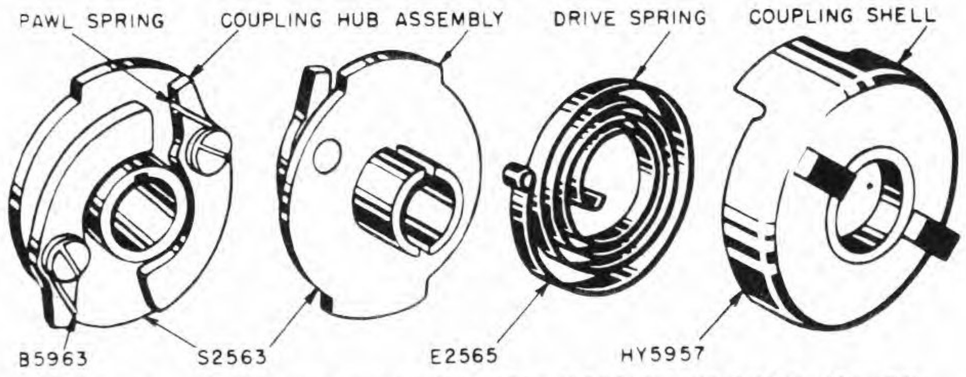

TYPE UB IMPULSE COUPLING COMPLETE - UZ2563C - LUG ANGLE - 35° - CW

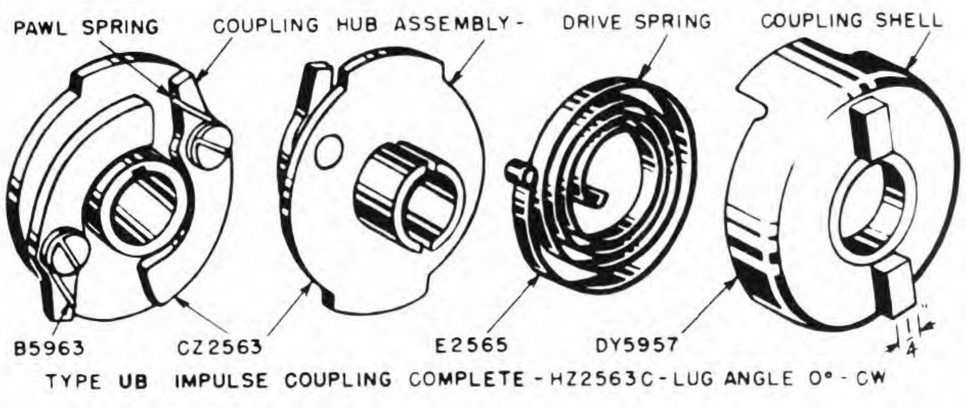

TYPE UB IMPULSE COUPLING COMPLETE - HZ2563C - LUG ANGLE 0° - CW

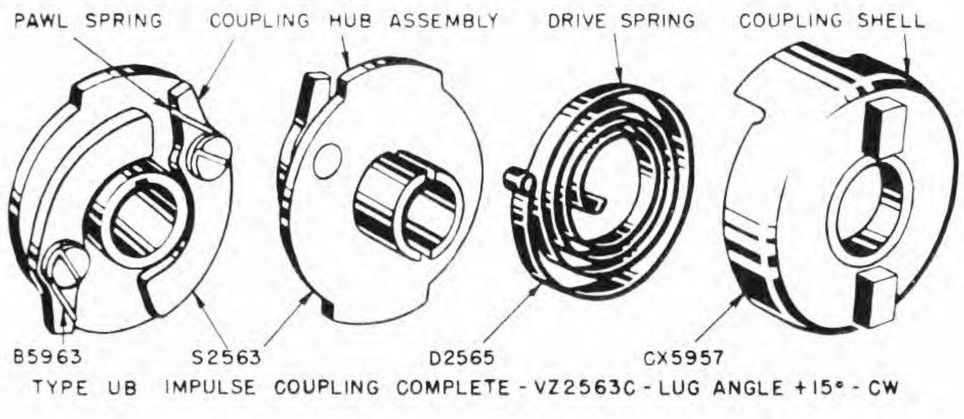

TYPE UB IMPULSE COUPLING COMPLETE - VZ2563C - LUG ANGLE +15° - CW

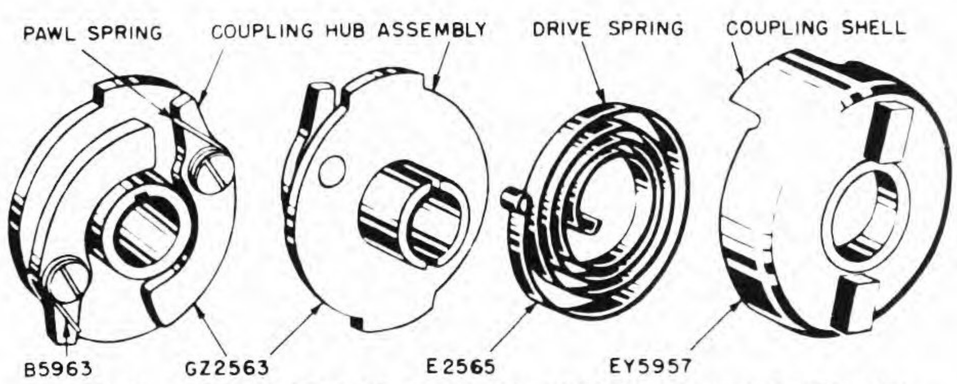

TYPE UB IMPULSE COUPLING COMPLETE - NZ2563C - LUG ANGLE +30° - CW

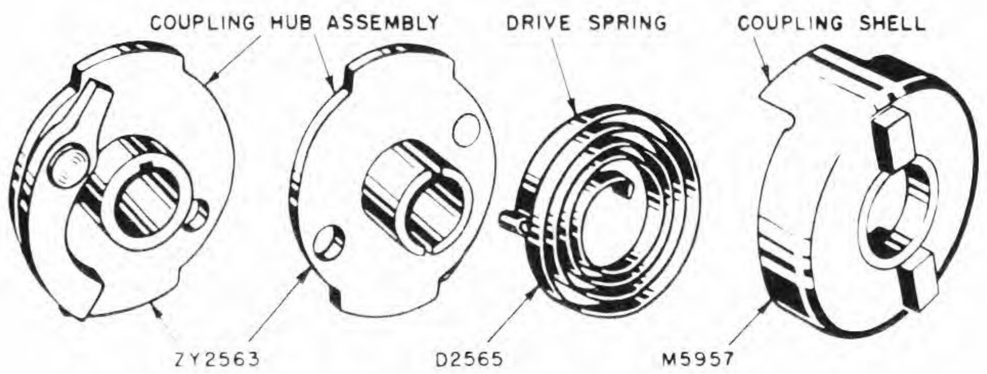

TYPE UBL IMPULSE COUPLING COMPLETE - XZ2563C - LUG ANGLE 0° - CCW

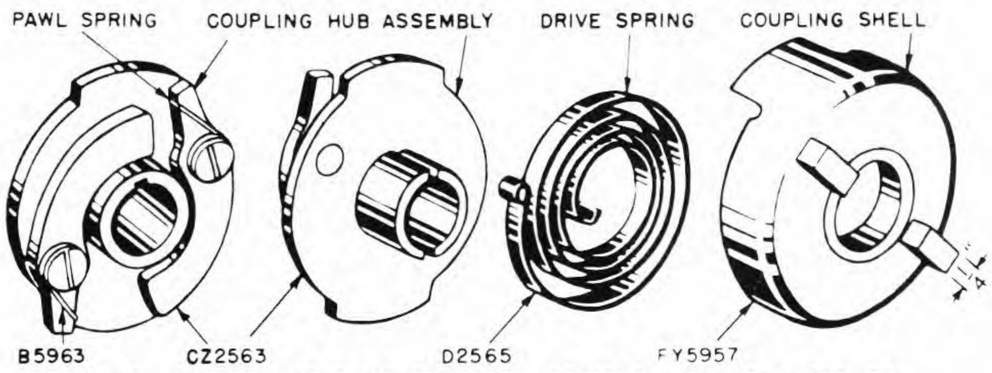

TYPE UB IMPULSE COUPLING COMPLETE - PZ2563C - LUG ANGLE - 35° - CW

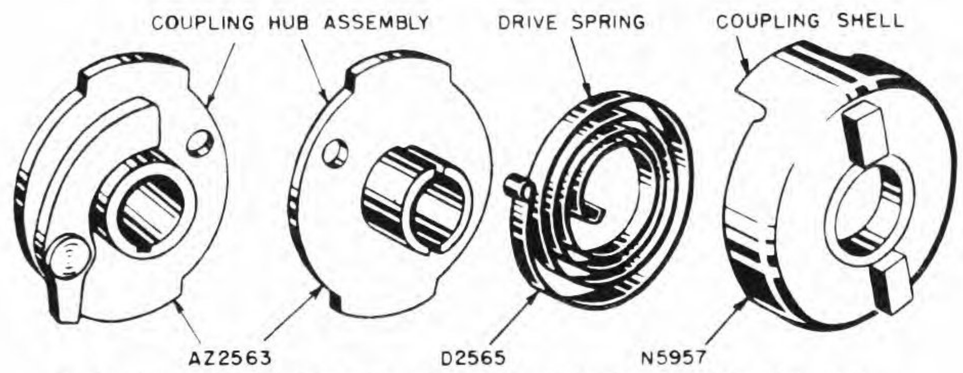

TYPE UB IMPULSE COUPLING COMPLETE - YZ2563C - LUG ANGLE 0° - CW

TYPE UB IMPULSE COUPLING COMPLETE - RZ2563C - LUG ANGLE +10° - CW

TYPE UB IMPULSE COUPLING COMPLETE - ZZ2563C - LUG ANGLE + 30° - CW

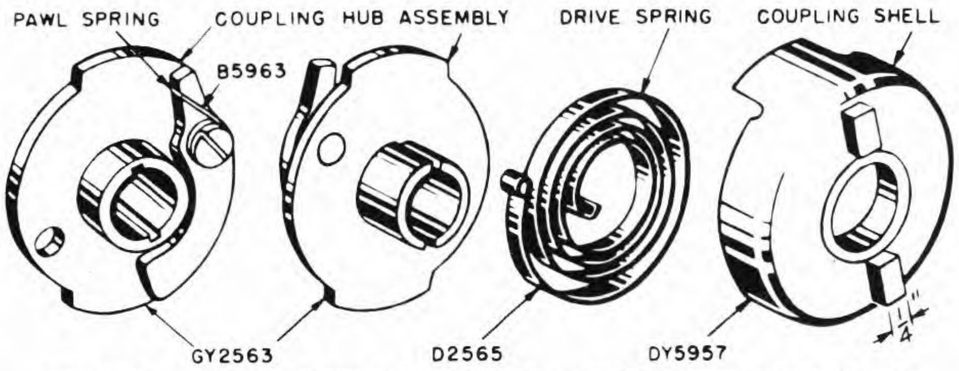

TYPE UB IMPULSE COUPLING COMPLETE - TZ2563C - LUG ANGLE 0° - CW

TYPES UC and UD IMPULSE COUPLINGS

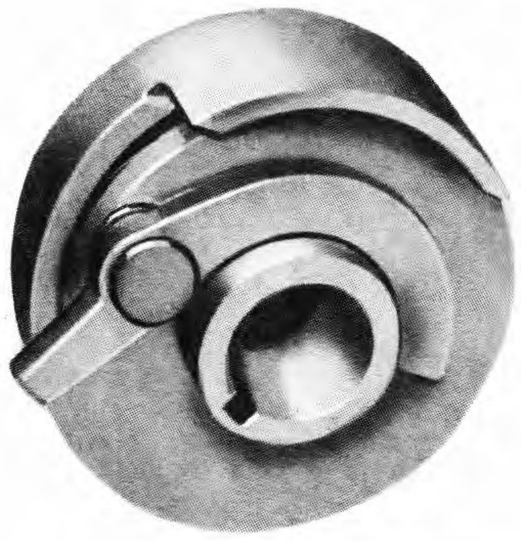

TYPE UC IMPULSE COUPLING
Single Pawl - Clockwise Rotation

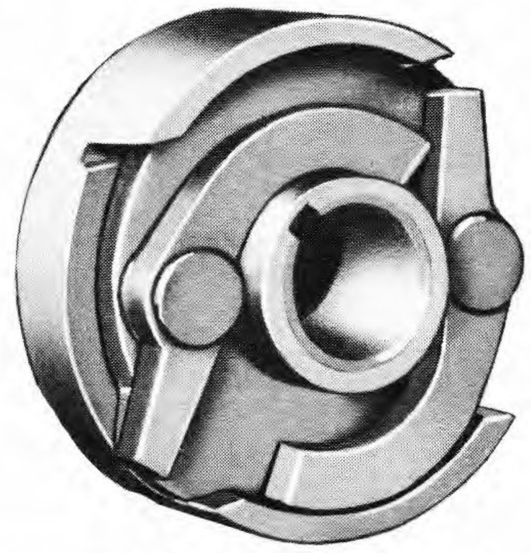

TYPE UD IMPULSE COUPLING
Twin Pawl - Clockwise Rotation

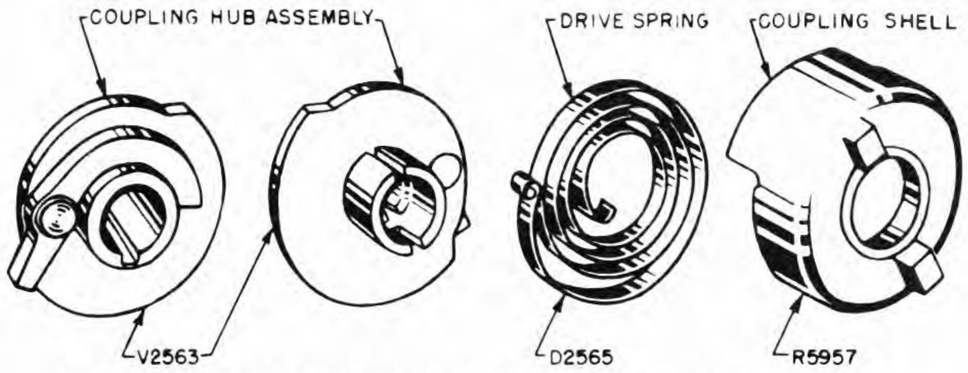

TYPE UC IMPULSE COUPLING COMPLETE - V2563C - LUG ANGLE -25° -CW

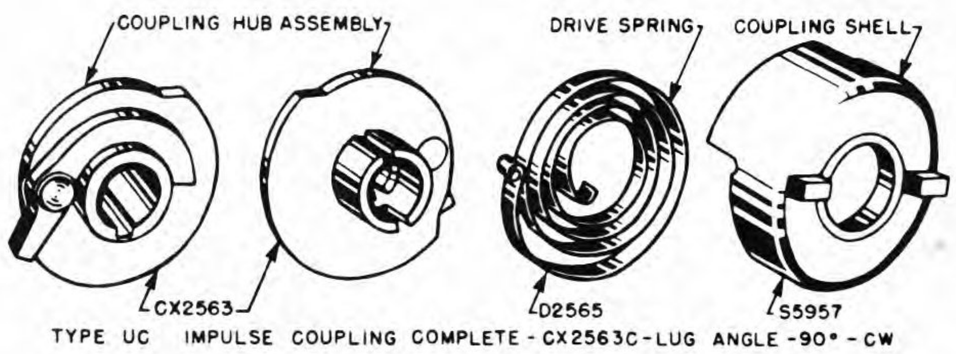

TYPE UC IMPULSE COUPLING COMPLETE - CX2563C - LUG ANGLE -90° - CW

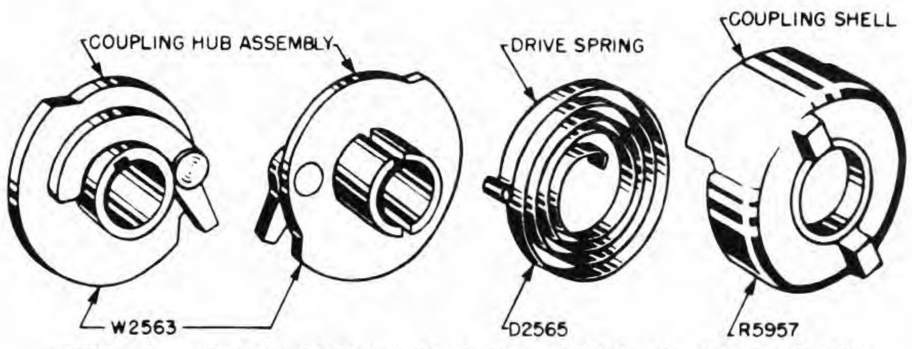

TYPE UCL IMPULSE COUPLING COMPLETE - W2563C - LUG ANGLE - 25° CCW

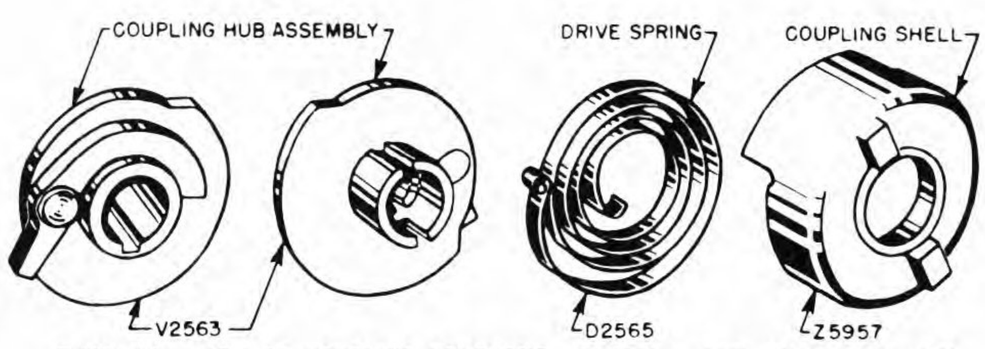

TYPE UC IMPULSE COUPLING COMPLETE - MX2563C - LUG ANGLE - 25° - CW

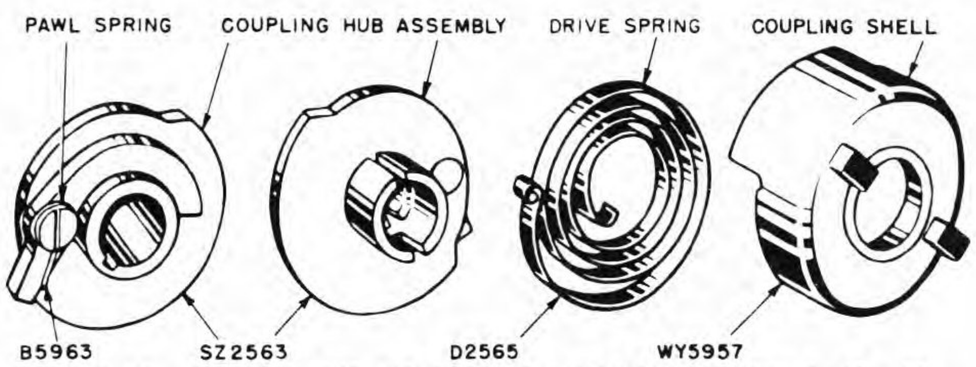

TYPE UC IMPULSE COUPLING COMPLETE - LV2563C - LUG ANGLE - 42° - CW

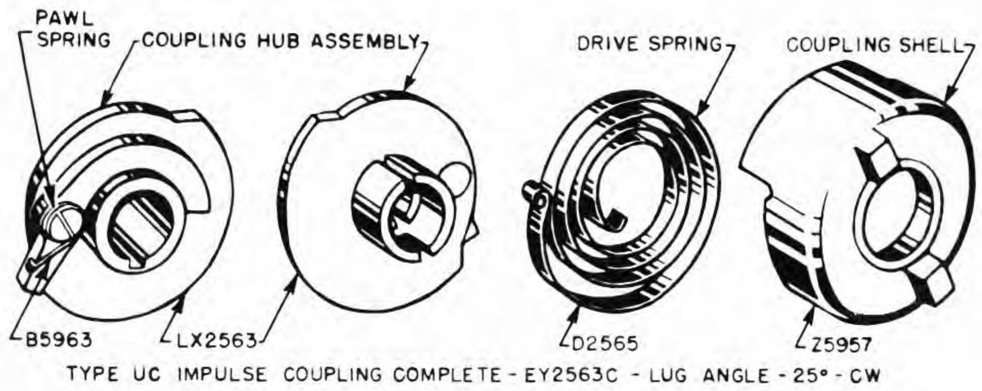

TYPE UC IMPULSE COUPLING COMPLETE - EY2563C - LUG ANGLE - 25° - CW

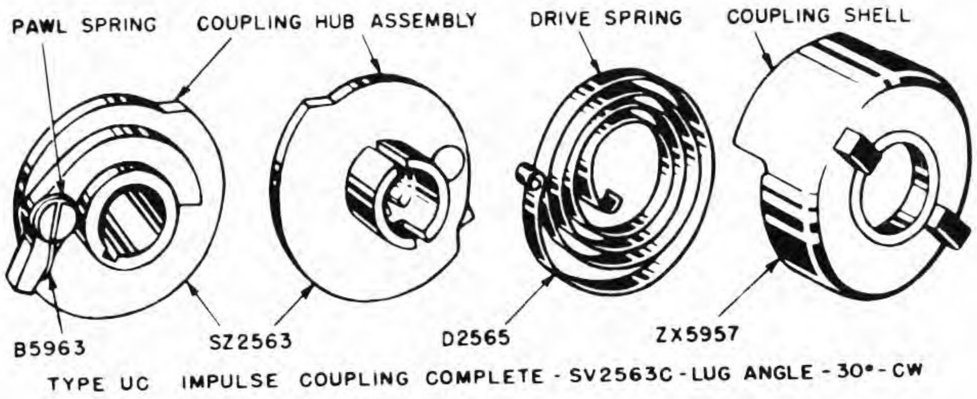

TYPE UC IMPULSE COUPLING COMPLETE - SV2563C - LUG ANGLE - 30° - CW

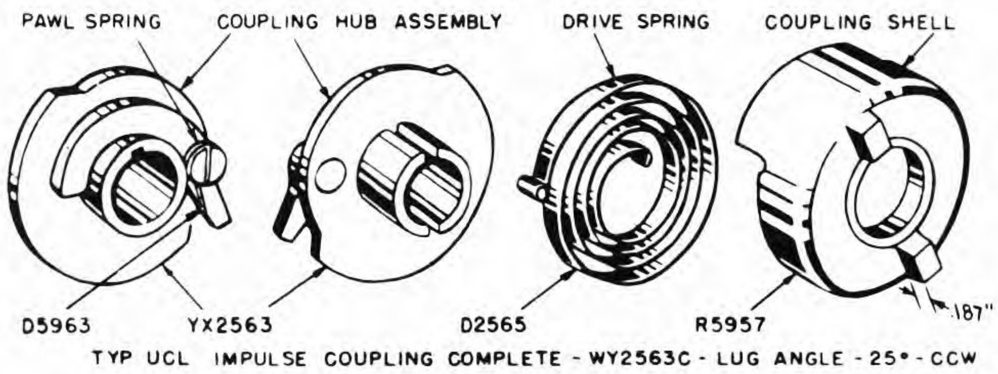

TYP UCL IMPULSE COUPLING COMPLETE - WY2563C - LUG ANGLE - 25° - CCW

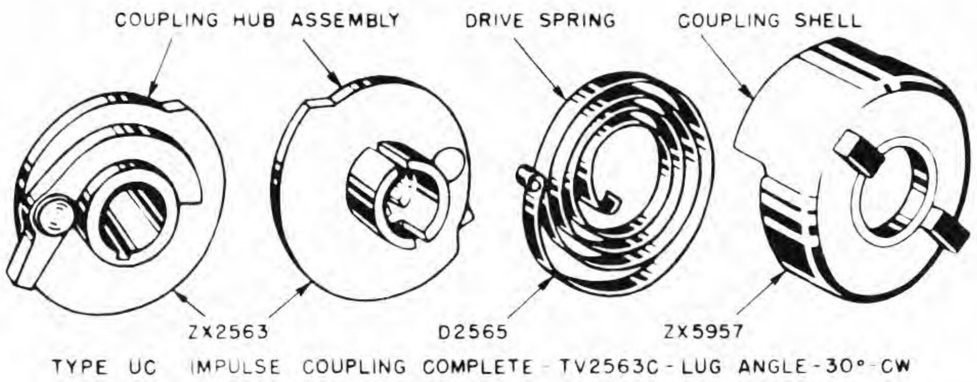

TYPE UC IMPULSE COUPLING COMPLETE - TV2563C - LUG ANGLE - 30° - CW

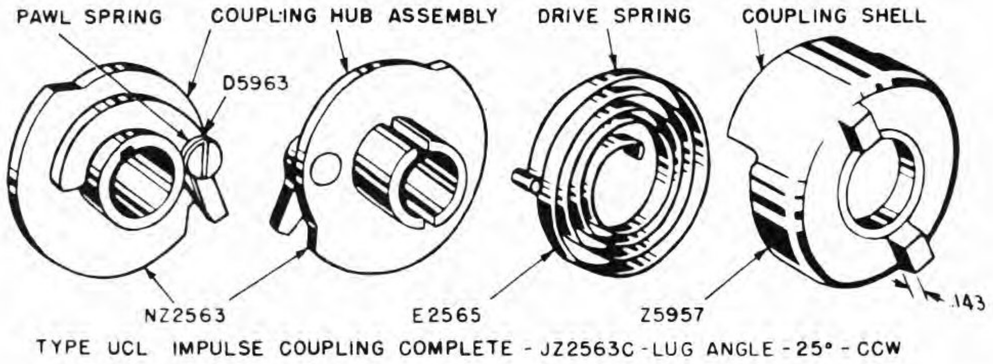

TYPE UCL IMPULSE COUPLING COMPLETE - JZ2563C - LUG ANGLE - 25° - CCW

TYPES UC and UD IMPULSE COUPLINGS

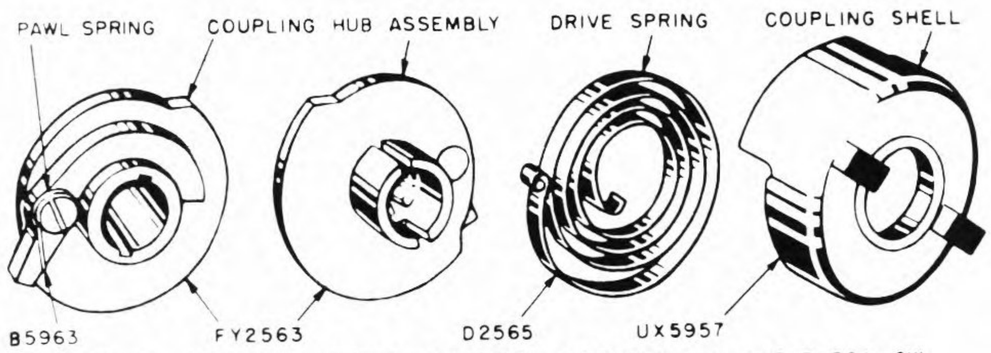

TYPE UC IMPULSE COUPLING COMPLETE - SZ2563C - LUG ANGLE -52° - CW

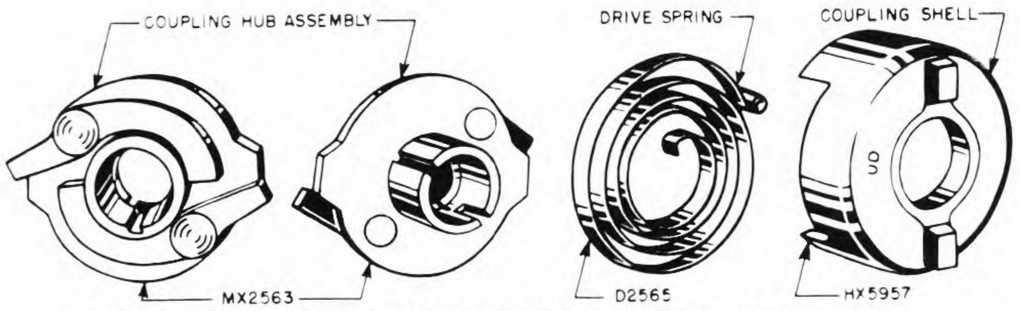

TYPE UD IMPULSE COUPLING COMPLETE - HY2563C - LUG ANGLE -25° - CW

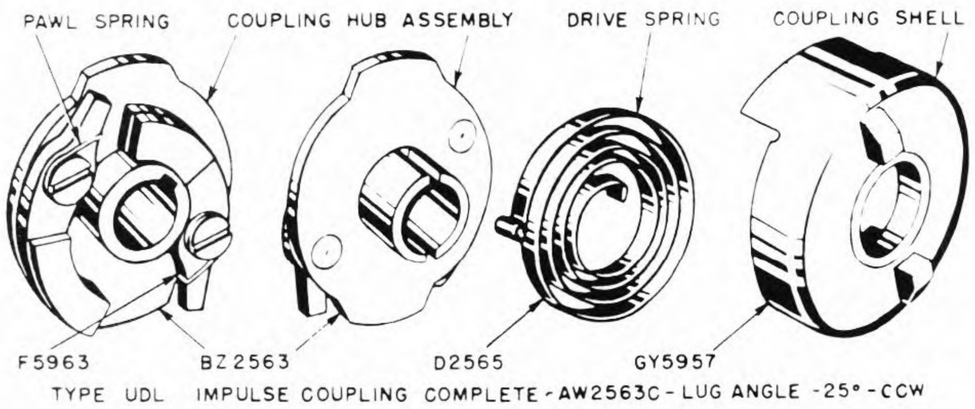

TYPE UDL IMPULSE COUPLING COMPLETE - AW2563C - LUG ANGLE -25° - CCW

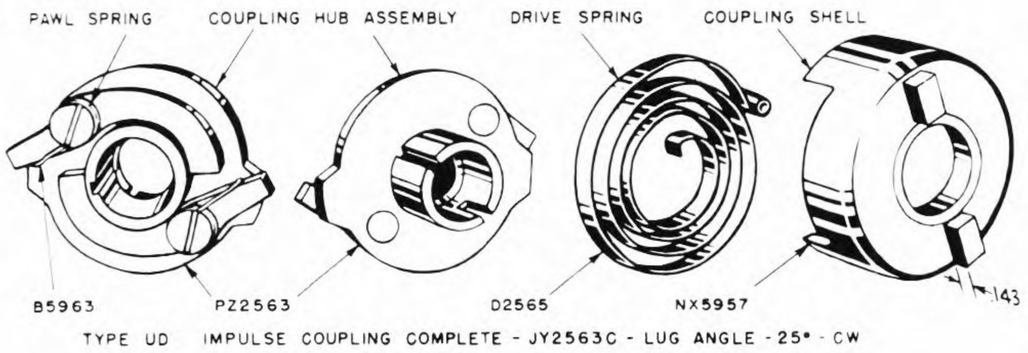

TYPE UD IMPULSE COUPLING COMPLETE - JY2563C - LUG ANGLE -25° - CW

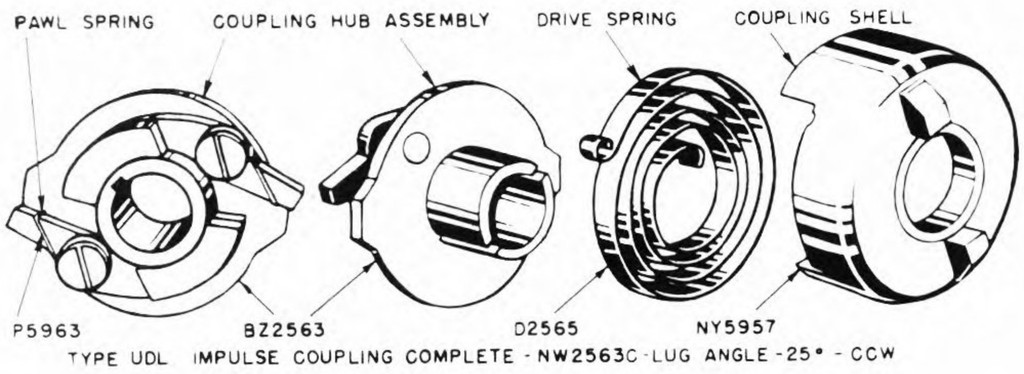

TYPE UDL IMPULSE COUPLING COMPLETE - NW2563C - LUG ANGLE -25° - CCW

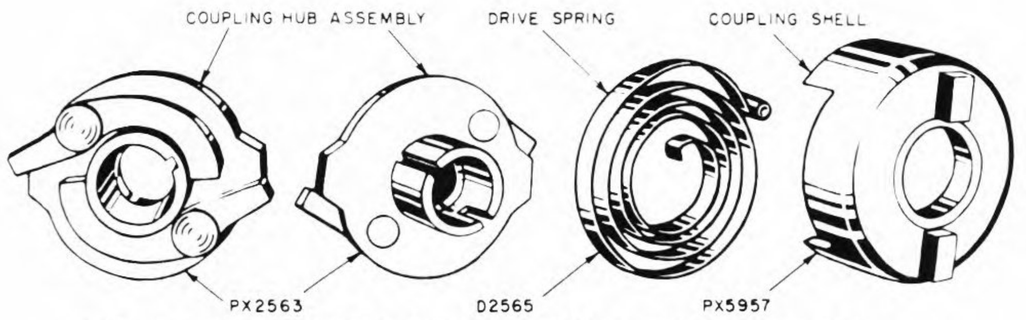

TYPE UD IMPULSE COUPLING COMPLETE - KY2563C - LUG ANGLE 0° - CW

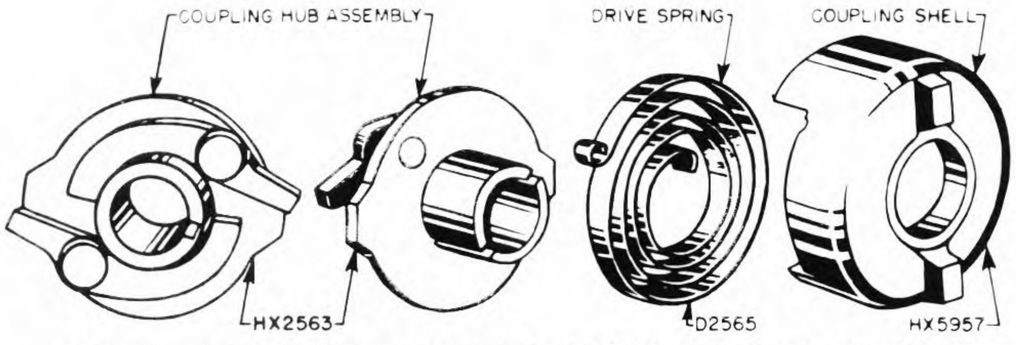

TYPE UDL IMPULSE COUPLING COMPLETE - ZX2563C - LUG ANGLE - 25° - CCW

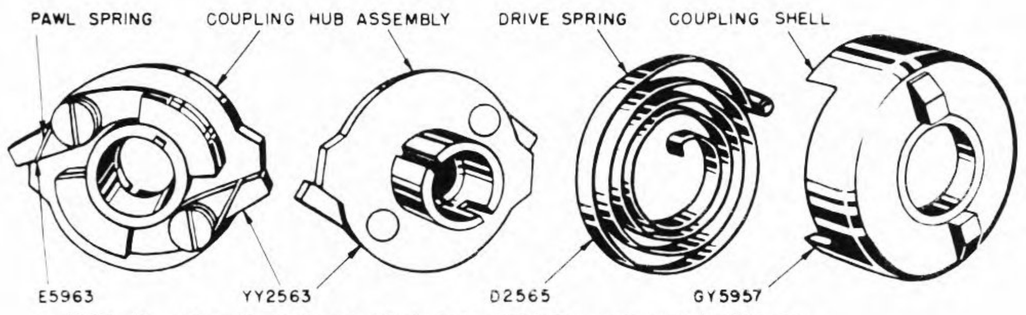

TYPE UD IMPULSE COUPLING COMPLETE - QZ2563C - LUG ANGLE - 25° - CW

IMPULSE COUPLING HOUSINGS for BASE MOUNTING MAGNETOS

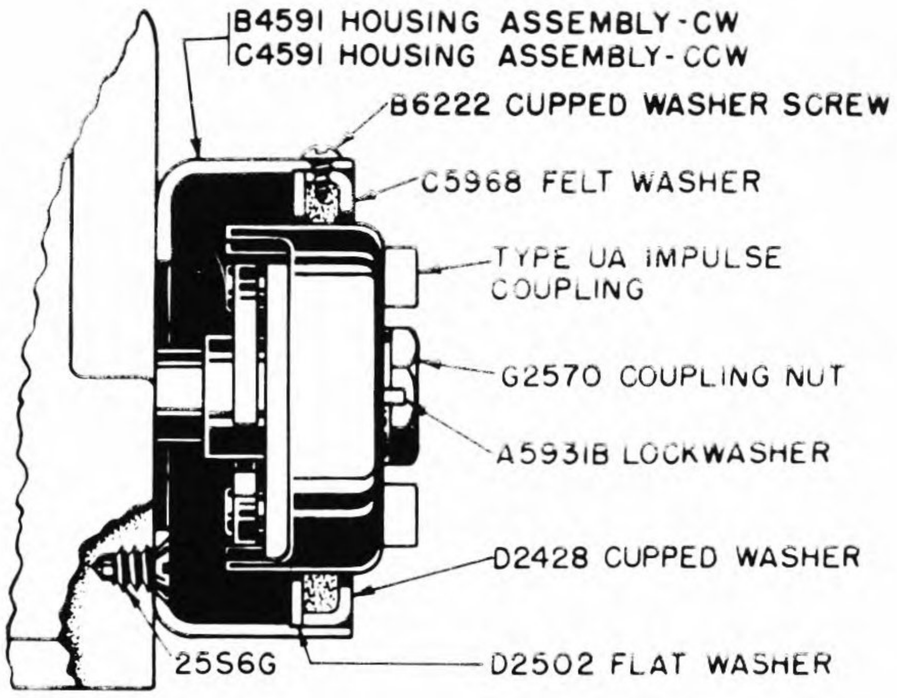

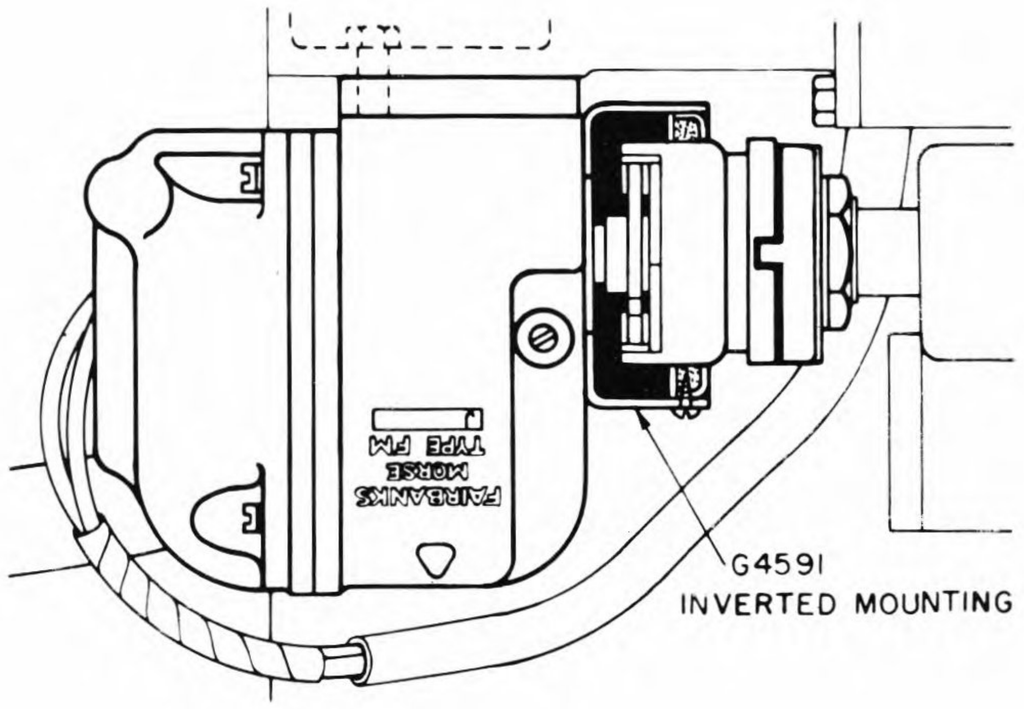

TYPE UA IMPULSE COUPLINGS ON TYPE FM-J MAGNETOS

Base mounting Type FM-J magnetos, equipped with Type UA impulse couplings, require the B4591 Coupling Housing Assembly for CCW rotation or the C4591 Housing Assembly for CW rotation. The parts needed to complete the assembly are D2428 Cupped Washer, D2502 Flat Washer, K2570 Coupling Nut, A5931B Nut Lockwasher, C5968 Felt Washer and two B6222 Cupped Washer Screws. B4591 and C4591 Housing Assemblies are mounted on the frame with four 1/4"-20x3/8" flat head screws - 25S6G.

A special G4591 Coupling Housing Assembly is available for CCW rotation, base mounting Type FM-J magnetos which operate in an inverted position, e.g., the Type FM-J2A36 replacement magnetos for Caterpillar starting engines. All other parts of the housing assembly are identical to those used on standard units.

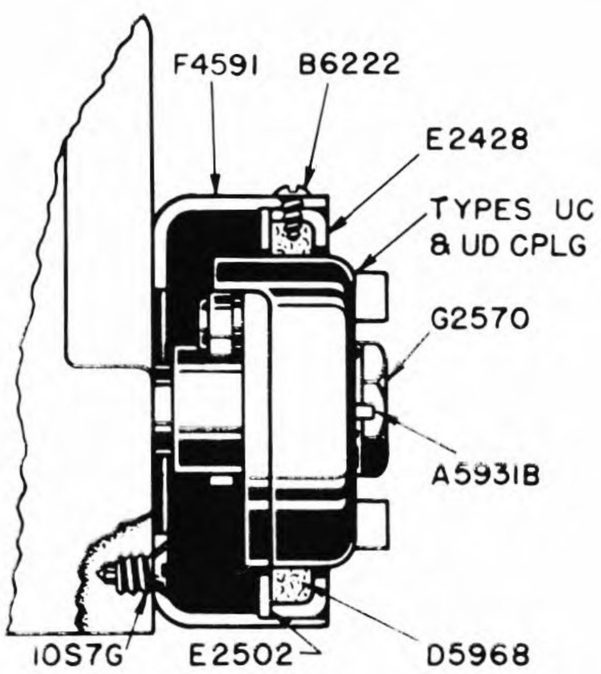

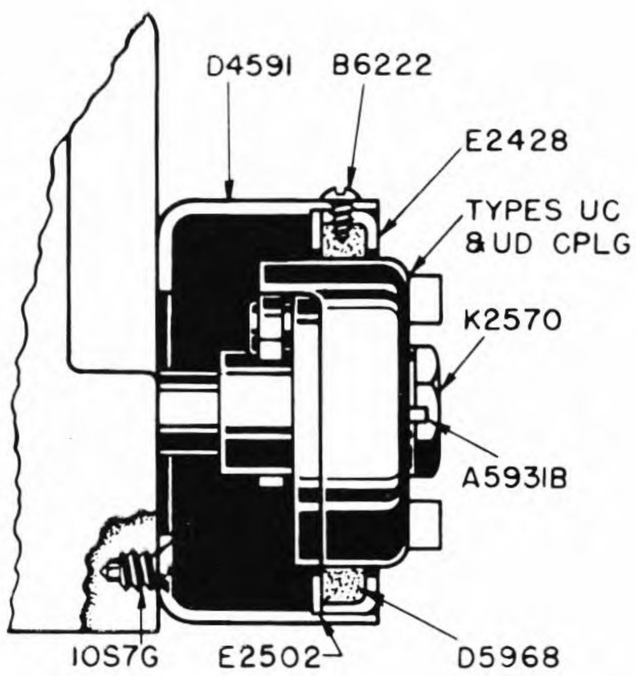

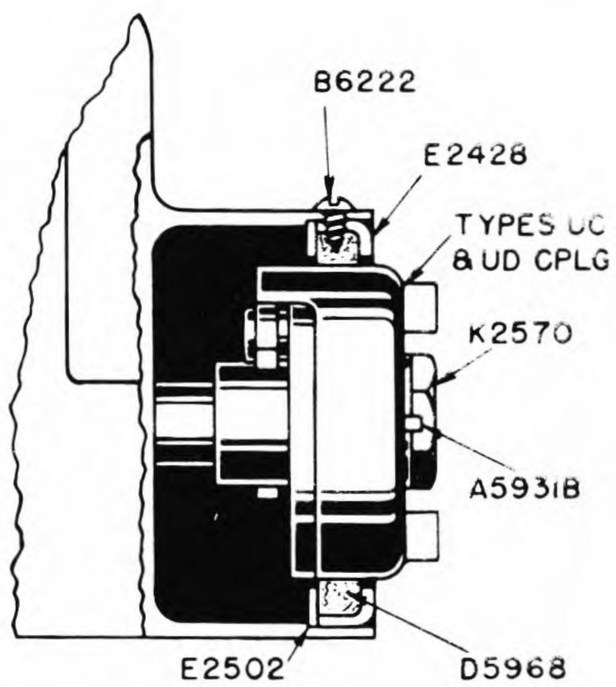

TYPES UC AND UD IMPULSE COUPLINGS ON TYPE FM-J MAGNETOS

Base mounting Type FM-J magnetos equipped with Types UC or UD impulse couplings require the F4591 Coupling Housing Assembly on standard shaft length applications. For extended shaft applications, the D4591 Housing Assembly is available. The parts needed to complete the assembly are E2428 Cupped Washer, E2502 Flat Washer, K2570 Coupling Nut, A5931B Nut Lockwasher, D5968 Felt Washer and two B6222 Cupped Washer Screws. D4591 and F4591 Housing Assemblies are mounted on the frame with two #10-24x7/16" flat head screw - 10S7G. For CW rotation, the mounting holes are marked "C," for CCW rotation the holes are marked "A."

For certain applications, the Type FM-J frame has been furnished with an integral, die cast housing for Types UC & UD couplings. Identical parts are required to complete the housing assembly.

IMPULSE COUPLING NUTS and BUSHINGS

Impulse coupling nuts and gear bushings used on Fairbanks-Morse magnetos are tabulated below. Several important points should be noted in the identification of coupling nuts, e.g., change in size of the magneto shaft thread from 7/16"-20 to 3/8"-16 and the change in coupling and gear nut from one piece to the two piece coupling nut M2570 or P2570 and gear bushing A2572 or B2572. Refer to RPL9837, latest state for prices.

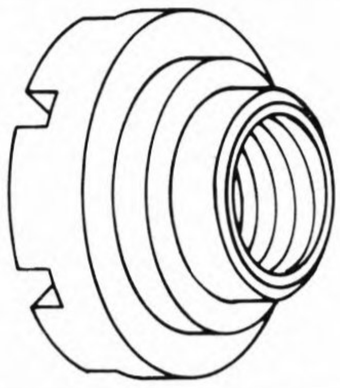

A2570

7/16"-20 thread
W Coupling
Types R2 and RV Magnetos

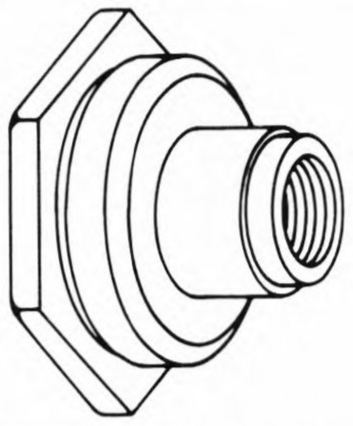

N2570

3/8-16 thread
Type FM-J2B14 Magnetos

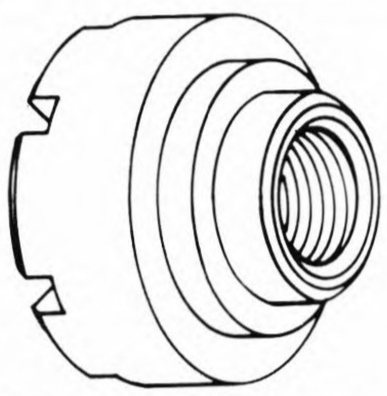

E2570

3/8"-16 thread
X, XA and XD Couplings
Types RV and FM Magnetos

P2570

3/8"-16 Coupling Nut

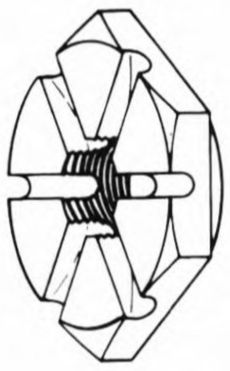

B2572

Gear Bushing

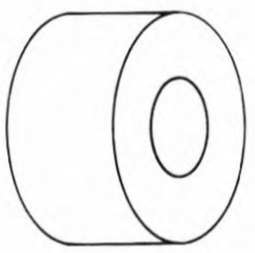

Types FM-JE4B8, FM-J1B13,
FM-J4B13 and FM-JE4B26 Magnetos

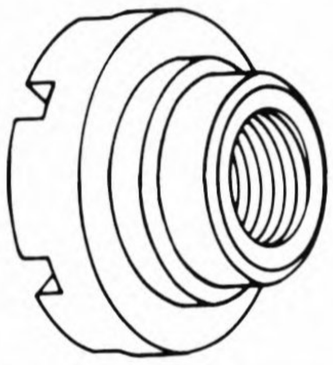

F2570

3/8"-16 thread
W Coupling
Type FM Magnetos

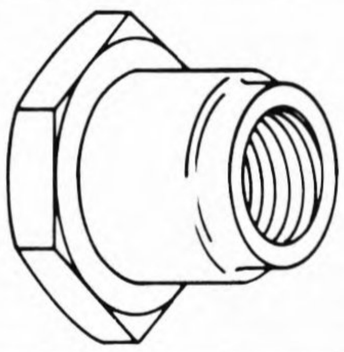

G2570 J2570

3/8"-16 thread 7/16"-20 thread
UA, UB and UC Coupling
All type magnetos

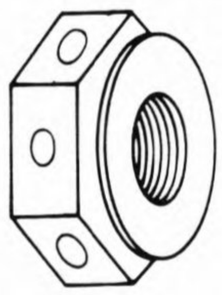

R2570

3/8"-16 thread
Type FM-XE4B16E
Magnetos

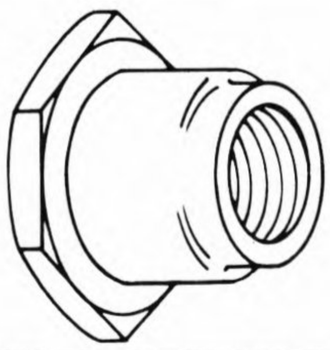

K2570

3/8"-16 thread
UC Coupling
Type FM-J1A7 Magnetos

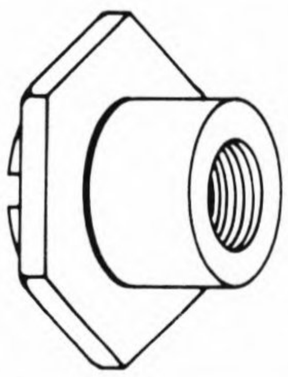

S2570

One piece coupling nut
3/8"-16 thread
Type FM-XYE4A94 Magnetos

M2570
3/8"-16 Coupling Nut

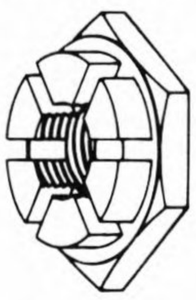

A2572
Gear Bushing

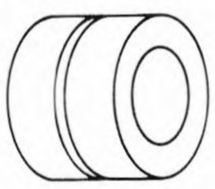

UB8 Coupling - Type FM-J1B7 Magnetos
UB9 Coupling - Type FM-JV4B7 Magnetos
UB14 Coupling - Type FM-JFE2B69 Magnetos

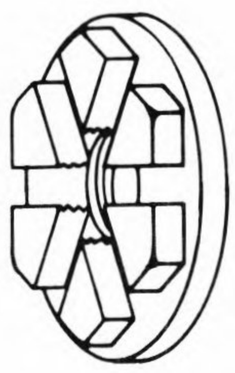

T2570

3/8"-16x1-1/8" Nut
Type FM-X4B14D
Magnetos

IMPULSE COUPLING PAWL STOP PINS

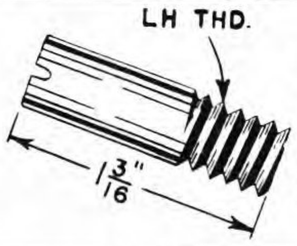

A2568
Used with Types W or UA impulse couplings on CW rotation, base mounting Types RV4 and RV6 magnetos.
3/8"-16x1-3/16"

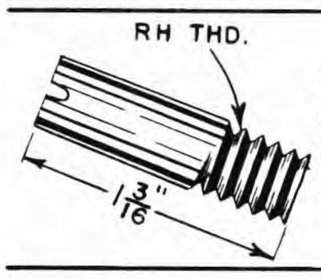

B2568
Used with Types W or UAL impulse couplings on CCW rotation, base mounting Types DRV2, RV4/2, RV4 and RV6 magnetos.
3/8"-16x1-3/16"

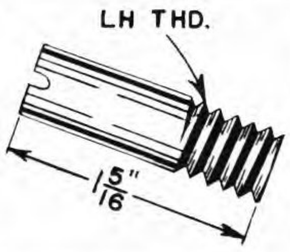

C2568
Used with Series U, X and Y impulse couplings on CW rotation, flange mounting Types RV, FM, FMH, FMK, FMO, FMR and FMJ magnetos.
3/8"-16x1-5/16"

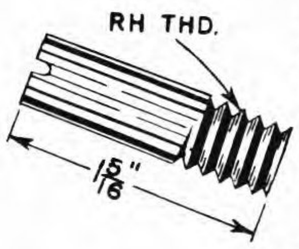

D2568
Used with Series U, X and Y impulse couplings on CCW rotation, flange mounting Types RV, FM, FMH, FMK, FMO, FMR and FMJ magnetos.
3/8"-16x1-5/16"
When D2568 is ordered, furnish B2568.

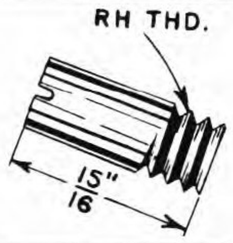

E2568
Used with Types UBL, XD and YB impulse couplings on CCW rotation, special flange mounting Type DRV2B magnetos.
3/8"-16x15/16"

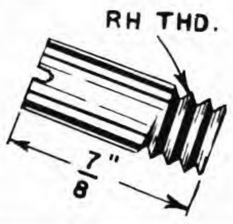

F2568
Used with Type WA impulse couplings on CCW rotation, base mounting Types RV4/2, FMOF2A magnetos.
3/8"-16x7/8"

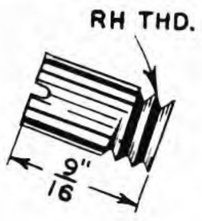

H2568
Used with Type UBL impulse couplings on CCW rotation, special flange mounting Type FMJ1B2B magnetos.
3/8"-16x9/16"

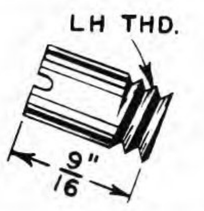

J2568
Used with Type UB impulse couplings on CW rotation, special flange mounting Type FMJ1B2A magnetos.
3/8"-16x9/16"

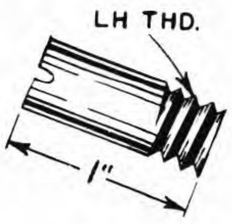

K2568
Used with Type UC impulse couplings on CW rotation, special flange mounting Type FMJ1B7 magnetos.
3/8"-16x1"
When K2568 is ordered, furnish S2568.

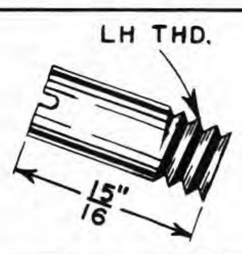

N2568
Used with Type UB impulse couplings on CW rotation Type FMJ magnetos with demountable SAE flange plates.
3/8"-16x15/16"

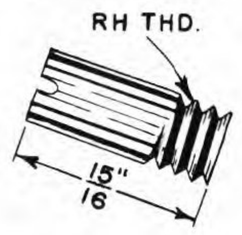

P2568
Used with Type UBL impulse couplings on CCW rotation Type FMJ magnetos with demountable SAE flange plates.
3/8"-16x15/16"

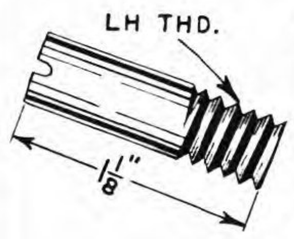

Q2568
Used with Type UB impulse couplings on CW rotation, special flange mounting Type FM-JV4B7 magnetos.
3/8"-16x1-1/8"
When Q2568 is ordered, furnish S2568.

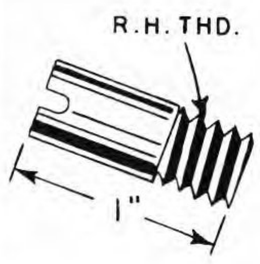

R2568
Used with Type UBL impulse couplings having CCW rotation, Type FM-J1A magnetos.
3/8"-16x1"-RH
When R2568 is ordered, furnish F2568.

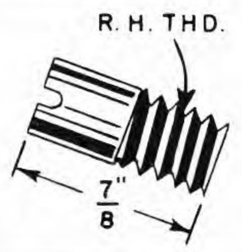

S2568
Used with Type UB impulse couplings having CW rotation, Type FM-J1A magnetos.
3/8"-16x7/8"-LH

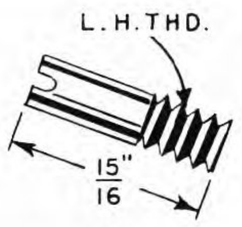

T2568
Used with Type UB impulse couplings having CW rotation, FM-J1B83 magnetos.
1/4"-20x15/16"-LH

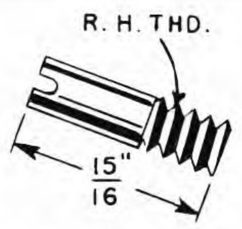

U2568
Used with Type UBL impulse couplings having CCW rotation, FM-J1B26 magnetos.
1/4"-20x15/16"-RH

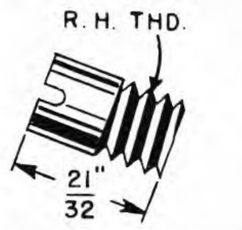

V2568
Used with Type UBL impulse couplings having CCW rotation, FM-J1 magnetos.
1/4"-20x1-5/16"-LR

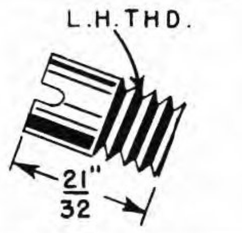

W2568
Used with Type UB impulse couplings having CW rotation.
3/8"-16x21/32"-RH

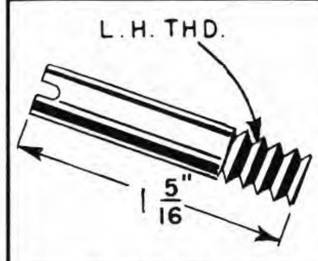

X2568
Used with Type UB impulse couplings having CW rotation, FM-XF2B36F magnetos.
3/8"-16x21/32"-LH

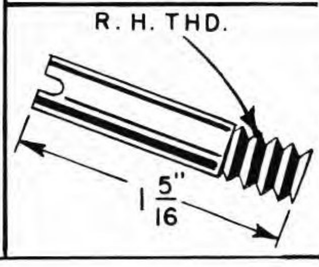

Y2568
Used with Type UBL impulse couplings having CCW rotation, FM-XF2B36H magnetos.
1/4"-20x1-5/16"

ADJUSTABLE DRIVE MEMBERS and STANDARD FLOAT FLOAT DISCS for BASE MOUNTING MAGNETOS

ADJUSTABLE DRIVE MEMBER

Standard base mounting magnetos are usually connected to the engine drive by an adjustable drive member and a float disc as illustrated. The drive member and float disc function as a flexible coupling to correct slight misalignment, while the adjustable feature of the drive member permits variations in magneto to engine timing.

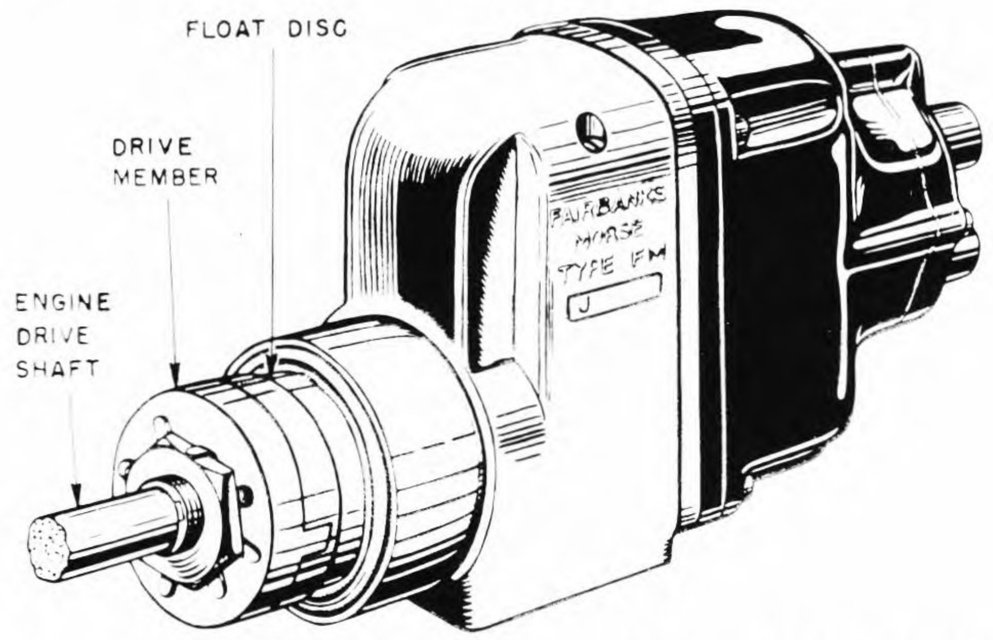

DRIVE MEMBER MOUNTING

Corresponding timing positions are first determined for the engine and the magneto. The drive member is then mounted on the engine drive shaft and the float disc fitted to its driving lugs. The split drive member assembly can then be shifted until the slots of the float disc line up exactly with the impulse coupling lugs. The drive member is locked by tightening the shaft collar nut and turning up one or more of the lockwasher lugs.

DRIVE MEMBER TYPES

The Type N drive member is the standard size unit for use with Type UA impulse couplings. Available for engine drive shafts of 1/2", 9/16", 5/8", 3/4", 13/16" and 7/8" diameters, the Type N drive member can be used to replace units of obsolete design as well as present production models. A smaller size, Type NC drive member, is furnished for use with the small diameter Types UC and UD impulse couplings with which 35 mm base mounting magnetos are equipped. The Type NC drive member is available for engine shafts of 1/2", 1/16", 5/8" and 3/4" diameters.

DRIVE MEMBER REPAIRS

Individual repair parts for Types N and NC drive members have been withdrawn as factory service items. The drive collar lockwasher and float disc are furnished only in complete drive member assemblies. The principal reasons for this change in repairs lie in the fact that the serrations of the old and new collars of the split coupling do not match suitably, and in a thread change. The larger shaft collars were formerly threaded 1-1/8"-20, while later collars have been threaded 1-1/8"-14, nuts of corresponding size being used.

DRIVE MEMBERS and FLOAT DISCS REPAIR CHARTS and LISTS

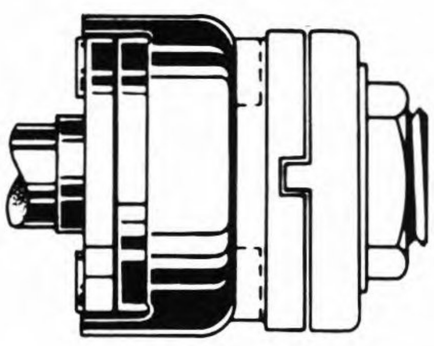

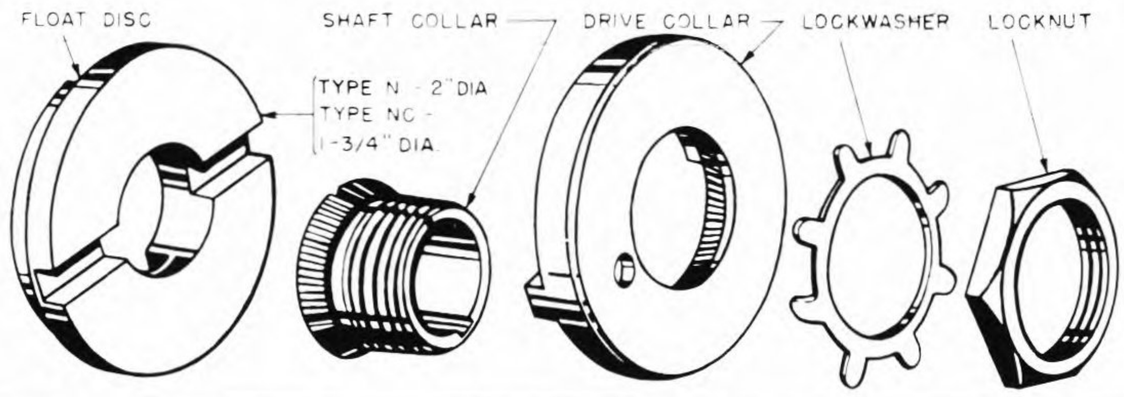

TYPE N DRIVE MEMBER

Part Number	Name of Part
B1513B	Drive Collar Lockwasher - B1513B used with 1/2", 9/16", 5/8", 3/4" Sizes
C1513B	Drive Collar Lockwasher - C1513B used with 13/16", 7/8" Sizes
A1555FC	Drive Member Assembly - Type N, 1/2" Bore
B1555FC	Drive Member Assembly - Type N, 9/16" Bore
C1555FC	Drive Member Assembly - Type N, 5/8" Bore
D1555FC	Drive Member Assembly - Type N, 3/4" Bore 1555FC - Always includes: 1 Shaft Collar 1 Drive Collar 1 Locknut 1 Lockwasher

Part Number	Name of Part
E1555FC	Drive Member Assembly - Type N, 13/16" Bore
F1555FC	Drive Member Assembly - Type N, 7/8" Bore 1555FC - Always includes: 1 Shaft Collar 1 Drive Collar 1 Locknut 1 Lockwasher
G1555FC	Drive Member Assembly - Type N - 5/8" Bore, 3/16" Keyway
H1555FC	Drive Member Assembly - Type N - 3/4" Bore, 21/32" long
J1555FC	Drive Member Assembly - Type N - .7386 Bore, 3/16" Keyway

TYPE NC DRIVE MEMBER

Part Number	Name of Part
B1513B	Drive Collar Lockwasher
A1555GC	Drive Member Assembly - Type NC, 1/2" Bore
B1555GC	Drive Member Assembly - Type NC, 9/16" Bore
C1555GC	Drive Member Assembly - Type NC, 5/8" Bore
D1555GC	Drive Member Assembly - Type NC, 3/4" Bore 1555GC - Always includes: 1 Shaft Collar 1 Drive Collar 1 Locknut 1 Lockwasher
E1555GC	Drive Member Assembly - Type NC - 5/8" Bore, FM-X1A43A

STANDARD FLOAT DISCS

Part Number	Name of Part
A2862	Float Disc - Use with Type N Drive Member - A2862 Disc has 1/4" and 5/16" Slots
A2862A	Float Disc - Use with Type N Drive Member - A2862A Disc has 1/4" Slots only
B2862A	Float Disc - Use on IHC Changeover - Has 1/4" Slots
C2862A	Float Disc - Use on IHC Changeover - Has 1/4" and 5/16" Slots
D2862A	Float Disc - Use on IHC Changeover - Has 1/4" Slots
E2862A	Float Disc - Use on Caterpillar Changeover
G2862A	Float Disc - Use on LeRoi Changeover - Has 1/4" Slots
K2862A	Float Disc - Use on FM-XV6A11 Magneto - Has 1/4" and 5/16" Slots
A2862B	Float Disc - Use with Type NC Drive Member - Has 1/4" Slots
B2862B	Float Disc - Fordson - Has 1/4" and 5/16" Slots

SPECIAL DRIVE MEMBERS, FLOAT DISCS AND ADAPTERS

While SAE standards provide a uniform means of mounting and coupling magnetos to the engines, various manufacturers have or are using special drive or mounting equipment. To permit replacement with standard magnetos, in such cases, a number of special adapters and drive members are available from the factory as shown below.

Description of Application - Engine Mfgr. and Model Magneto Type Designation	Drive Member On Engine Drive Shaft	Float or Adapter Disc
STANDARD TYPE N DRIVE MEMBER - A1555F-C and FLOAT DISC A2862A This standard drive member and float disc are used with nearly all SAE base mounting magnetos. The drive member provides full adjustment for engine to magneto timing and is available in the sizes listed below. A1555F-C - 1/2" Bore B1555F-C - 9/16" Bore C1555F-C - 5/8" Bore D1555F-C - 3/4" Bore E1555F-C - 13/16" Bore F1555F-C - 7/8" Bore G1555F-C - 5/8" Bore, 3/16" Keyway H1555F-C - 3/4" Bore, 21/32" Long J1555F-C - .7386 Bore, 3/16" Keyway The phenol fibre float disc is slotted, 1/4" wide, for types UA and W impulse couplings.	 A1555F-C	 A2862A
SPECIAL INTERNATIONAL HARVESTER CO. DRIVE MEMBER AND ADAPTER - B2862A On IHC and McCormick-Deering Tractors equipped with Splitdorf Dixie 46C or IHC early E4A magnetos, the special drive member shown was used. To adapt the standard SAE base mounting Fairbanks-Morse Types FM-X4A or FM-K4A magnetos to this mounting, a special adapter float disc B2862A is required.	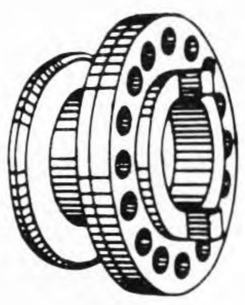	 B2862A
SPECIAL INTERNATIONAL HARVESTER CO. DRIVE MEMBER AND ADAPTER - C2862A On IHC and McCormick-Deering tractors equipped with IHC late E4A or early F4 magnetos, the special drive member shown was used. To adapt the standard SAE base mounting Fairbanks-Morse Types FM-X4A or FM-K4A magnetos to this mounting, a special adapter C2862A is required.	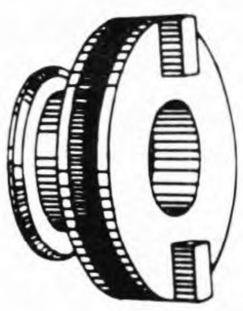	 C2862A
SPECIAL INTERNATIONAL HARVESTER CO. DRIVE MEMBER AND ADAPTER - D2862A On IHC and McCormick-Deering tractors equipped with IHC late F4 magnetos, the special drive member shown was used. To adapt the standard SAE base mounting Types FM-X4A or FM-K4A magnetos to this mounting, a special adapter D2862A is required.		 D2862A
SPECIAL ADAPTER E2862A FOR CATERPILLAR TRACTOR CO. WITH STANDARD DRIVE MEMBER AND FLOAT DISC To replace Eisemann GM4, CT4, G4 and GV4 magnetos on Caterpillar tractors, it is necessary to use an extension on the drive shaft. The standard Type N drive member D1555F-C with 3/4" bore is mounted and keyed to the end of the extension shaft. The Type N float disc A2862A is used between the drive member and the impulse coupling.	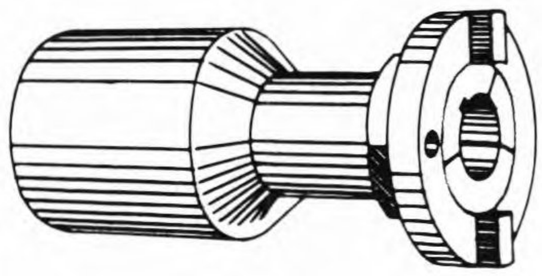 A2862A D1555F-C	 E2862A

Description of Application - Engine Mfgr. and Model Magneto Type Designation	Drive Member On Engine Drive Shaft	Float or Adapter Disc
SPECIAL ADAPTER FOR LE ROI ENGINES - G2862A When replacing magnetos on Le Roi one, two and four cylinder engines, use the special adapter shown. **SPECIAL FLOAT DISC - K2862A** When replacing IHC F6 magnetos, operating at 3/4 crankshaft speed, with a FM-XV6A11 magneto, it is necessary to use the special float disc shown.	 G2862A	 K2862A
STANDARD TYPE NC DRIVE MEMBER A1555G-C AND FLOAT DISC - A2862B The standard Type NC drive member and float disc shown is used with Type UC and UD impulse couplings with which many 35 mm base mounting magnetos are equipped. The drive member provides full adjustment for engine to magneto timing and is available in the sizes listed below. A1555G-C - 1/2" Bore B1555G-C - 9/16" Bore 2 Keyways C1555G-C - 5/8" Bore D1555G-C - 3/4" Bore E1555G-S - 5/8" Bore FM-X1A43A Magneto	 A1555G-C	 A2862B
SPECIAL FLOAT DISC FOR REPLACING FORDSON MAGNETOS When replacing magnetos on Fordson tractors, it is necessary to use the special float disc B2862B shown. **SPECIAL TAPERED DRIVE MEMBER FOR LE ROI CHANGEOVER** When replacing magnetos on some LeRoi engines, this special drive member A1555HC is required. It is an assembly of shaft collar with a taper bore, drive collar, drive collar lockwasher and locknut.	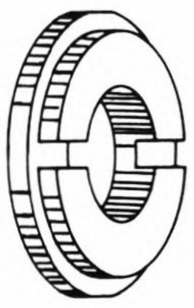 B2862B	 A1555H-C

IMPULSE COUPLINGS and their APPLICATION

Imp. Cplg. Part No.	Type Rotation	Hub Assembly	Drive Spring	Shell	Lug Angle	Used on Magnetos Specify Lag Angle Shown		
**F2563C	UBL-CCW	BY2563	D2565	M5957	0°	DRV2B		
Q2563C	UB -CW	Q2563*	D2565	N5957	0°	FM-LP4B16A-20	FM-X4B8C-25	FM-XOR4B4D-35
						FM-LTP4B16A-20	FM-X4B8D-20	FM-XOR4B8-30
						FM-LTX6B16J-30	FM-X4B8E-35	FM-XOR4B10-45
						FM-LX6B4B-51	FM-X4B9B-15	FM-XOR4B16-15
						FM-O4B4-35	FM-X4B10-35	FM-XOR4B16A-20
						FM-OR4B4A-25	FM-X4B13-20	FM-XOR4B16B-15
						FM-R4B3-30	FM-X4B14D-20	FM-XOR4B17-35
						FM-R4B4-35	FM-X4B16-15	FM-XOR6B4-35
						FM-R6B3-45	FM-X4B16A-20	FM-XOR6B4A-35
						FM-R6B4B-50	FM-X4B16C-20	FM-XOR6B4B-50
						FM-X1B75-35	FM-X4B16E-20	FM-XOR6B4C 50
						FM-X2B13-20	FM-X4B16F-20	FM-XOR6B10-40
						FM-X2B16-20	FM-X4B19A-20	FM-XOR6B14-40
						FM-X4B4A-25	FM-X4B19C-20	FM-XR4B3-30
						FM-X4B5-40	FM-XFZ2B102-25	FM-XR4B4-35
						FM-X4B5B-20	FM-XFZ2B102A-25	FM-XR4B16C-20
						FM-X4B8-18	FM-XOR4B3-30	FM-XR6B4-35
						FM-X4B8A-20	FM-XOR4B4A-35	FM-XR6B14-40
						FM-X4B8B-30		
When Q2563C coupling is ordered, with 20-35° lag angle, furnish DV2563C								
R2563C	UBL-CCW	R2563§	D2565	M5957	0°	FM-LP4B3C-30	FM-X2B6E-25	FM-XOR4B10A-35
						FM-LTP4B3C-30	FM-X2B13A-20	FM-XOR6B10A-40
						FM-OH4B-30	FM-X2B36-30	FM-XOR6B10B-45
						FM-OH6B10-35	FM-X4B6-35	FM-XOR6B10C-45
						FM-OR4B3-30	FM-X4B10C-30	FM-XR4B3B-30
						FM-OR4B3C-30	FM-X4B13A-20	FM-XR4B10-30
						FM-OR4B10A-35	FM-X4B16D-15	FM-XR6B10B-45
						FM-X2A36-30	FM-X4B19-20	FM-XR6B10F-30
						FM-X2B6-35	FM-XOR4B3C-30	
When R2563C coupling is ordered, with 20-35° lag angle, furnish F2563C. When R2563C coupling is ordered, with 20-25° lag angle, furnish FV2563C.								
S2563C	UB -CW	S2563‡ Inc. B5963	D2565	N5957	0°	FM-E6B16P-30	FM-X4B3A-30	FM-XOR4B3B-30
						FM-E6B16Q-40	FM-X4B3B-30	FM-XOR4B3D-30
						FM-E6B16U-20	FM-X4B4-25	FM-XOR4B4B-25
						FM-E6B16V-25	FM-X4B10-25	FM-XOR4B23-40
						FM-E6B16Y-20	FM-X4B16B-15	FM-XOR6B3-45
						FM-E6B97C-30	FM-X4B16V-15	FM-XOR6B3A-45
						FM-J4B3-30	FM-X4B73-15	FM-XOR6B16J-30
						FM-J4B3A-30	FM-X4B86-30	FM-XOR6B16L-20
						FM-K4B-25	FM-XE4B3-30	FM-XR4B3A-30
						FM-K4B3-30	FM-XE4B4-25	FM-XR4B19-35
						FM-LP4B3-30	FM-XE4B4A-25	FM-XR6B3-45
						FM-LP4B4-30	FM-XE4B13-20	FM-XR6B16J-30
						FM-LP4B16B-15	FM-XE4B14A-20	FM-XR6B16M-25
						FM-LTP4B3-30	FM XE4B14F-20	FM-XV4C73A-15
						FM-LTP4B4-35	FM-XE4B16G-25	FM-XV4C73B-15
						FM-LTP4B16B-15	FM-XE4B16P-25	FM-XVE4C73A-15
						FM-LTX6B3-45	FM-XE4B17-45	FM-XVE4C73B-15
						FM-LTX6B4-35	FM-XE4B17B-35	FM-XZ4B16A-20
						FM-LTX6B16M-25	FM-XE4B19A-20	FM-XZ4B16C-20
						FM-LX6B4-35	FM-XE4B44-20	FM-Z4B4-35
						FM-OR4B4-25	FM-XE4B73-15	FM-Z4B16-30
						FM-OR4B4B-25	FM-XE4B73A-15	FM-Z6B16A-40
						FM-OR6B3-45	FM-XE4B74-20	FM-Z6B16B-25
						FM-OR6B3A-45	FM-XE4B86-30	FM-Z6B16C-20
						FM-X4B3-30	FM-XOR4B3A-30	
When S2563C coupling is ordered with 25-30° lag angle, furnish EV2563C.								
T2563C	UA -CW	Q2563*	D2565	Q5957	0°	FM-E6A14F-40	FM-X2A47-30	FM-X4A14B-20
						FM-LP4A11-35	FM-X2A64-20	FM-X4A16-25
						FM-LTP4A11-35	FM-X2A64A-30	FM-X4A19-25
						FM-LTP4A14B-20	FM-X4A3-30	FM-X4A19C-20
						FM-LTX6A8D-50	FM-X4A5-40	FM-X4A30B-25
						FM-LTX6A17-35	FM-X4A7B-20	FM-X6A14-40
						FM-X2A13-25	FM-X4A8-20	FM-XOR4A2-30
						FM-X2A16-20	FM-X4A8A-25	FM-XOR4A3-30
						FM-X2A16B-20	FM-X4A8B-14	FM-XOR4A3A-30
						FM-X2A20-20	FM-X4A9-35	FM-XOR4A4-35
						FM-X2A37A-10	FM-X4A11-35	FM-XOR4A4B-35
						FM-X2A42-35	FM-X4A14-15	FM-XOR4A8-20
When T2563C coupling is ordered, 20-35° lag angle, substitute AY2563 hub.								

T2563C magneto list continued on the next page.

**Complete Impulse Coupling is obsolete - Parts only will be furnished until present stock is exhausted.

See footnote page 31

Imp. Cplg. Part No.	Type Rotation	Hub Assembly	Drive Spring	Shell	Lug Angle	Used on Magnetos Specify Lag Angle Shown		
T2563C - Continued from preceding page								
						FM-XOR4A10-35	FM-XOR6A17-35	FM-XR6A2-30
						FM-XOR4A16-45	FM-XOR6A17B-35	FM-XR6A3-45
						FM-XOR4A16A-45	FM-XOR6A34A-30	FM-XR6A7-50
						FM-XOR4A17-25	FM-XOR6A61A-35	FM-XR6A8-40
						FM-XOR4A36-35	FM-XR4A3-30	FM-XR6A10-35
						FM-XOR6A3-45	FM-XR4A3A-30	FM-XR6A17-35
						FM-XOR6A4-35	FM-XR4A3B-30	FM-XR6A41-37
						FM-XOR6A4B-50	FM-XR4A4-35	FM-XR6A61A-25
						FM-XOR6A7-50	FM-XR4A8-30	FM-XR6A67-20
						FM-XOR6A14-40	FM-XR4A10-35	FM-Z4A4-35
						FM-XOR6A14B-40	FM-XR4A14A-15	FM-Z6A17-35
						FM-XOR6A14E-35	FM-XR4A17-25	
U2563C	UAL-CCW	R2563§	D2565	Z5957	0°	FM-X2A6-35	FM-XOR4A2A-30	FM-XOR6A24C-50
When U2563C coupling is ordered with 20-35° lag angle, substitute BY2563 hub.						FM-X2A6A-35	FM-XOR4A2C-30	FM-XOR6A26-50
						FM-X2A6B-25	FM-XOR4A4A-35	FM-XOR6A40-25
						FM-X2A13A-25	FM-XOR4A4C-35	FM-XOR6A42A-42
						FM-X2A16C-20	FM-XOR4A8C-20	FM-XOR6B14C-40
						FM-X2A37-25	FM-XOR4A10A-35	FM-XR4A4A-35
						FM-X2A39-10	FM-XOR4A14-25	FM-XR4A10A-35
						FM-X2A39A-10	FM-XOR4A14C-25	FM-XR4A14-25
						FM-X2A47A-30	FM-XOR4A24A-35	FM-XR4A64-30
						FM-X4A2-25	FM-XOR6A2-45	FM-XR6A2A-30
						FM-X4A6-20	FM-XOR6A2A-45	FM-XR6A8A-40
						FM-X4A10-30	FM-XOR6A4A-35	FM-XR6A10A-35
						FM-X4A10B-35	FM-XOR6A8-35	FM-XR6A14-25
						FM-X4A11A-35	FM-XOR6A8A-30	FM-XR6A14A-30
						FM-X4A11B-35	FM-XOR6A8C-30	FM-XR6A27-45
						FM-X4A14A-15	FM-XOR6A10-30	FM-XR6A30-20
						FM-X4A14D-20	FM-XOR6A14A-40	FM-XR6A48A-25
						FM-X4A19B-20	FM-XOR6A14D-30	FM-Z6A10-30
						FM-X4A23-15	FM-XOR6A24A-50	
V2563C	UC -CW	V2563	D2565	Z5957	-25°	FM-X1A12-15	FM-X1A42-35	FM-X1A52B-10
						FM-X1A29A-25	FM-X1A43A-25	FM-X1A79-20
						FM-X1A36-15	FM-X1A50-12	FM-X1A79B-20
						FM-X1A37-20	FM-X1A52A-10	FM-X1A81-20
						FM-X1A38-15		
W2563C	UCL-CCW	W2563	D2565	R5957	-25°	FM-X1A7-1-30	FM-X1A10A-35	FM-X1A39A-10
						FM-X1A7-30	FM-X1A10B-30	FM-X1A43-20
						FM-X1A7C-30	FM-X1A37A-10	FM-X2A7-30
						FM-X1A7F-30	FM-X1A39-10	
X2563C	UBL-CCW	X2563 Inc. D5963	D2565	M5957	0°	FM-E6B8-30	FM-E6B8B-30	
AV2563C	UB -CW	BX2563	D2565	CX5957	+15°	FM-LTP4-1B28-40	FM-Z1B28-40	
BV2563C	UB -CW	S2563‡ Inc. B5963	D2565	RY5957	+48°	FM-LT8B17		
CV2563C	UBL-CCW	X2563 Inc. D5963	E2565	SY5957	+48°	FM-LT8B17A		
DV2563C	UB -CW	AY2563	D2565	N5957	0°			
EV2563C	UB -CW	CY2563 Inc. B5963	D2565	N5957	0°			
FV2563C	UBL-CCW	RX2563	D2565	M5957	0°			
GV2563C	UBL-CCW	X2563 Inc. D5963	D2565	LY5957	+30°	FM-LT6B19A		

See footnote page 31

Imp. Cplg. Part No.	Type Rotation	Hub Assembly	Drive Spring	Shell	Lug Angle	Used on Magnetos Specify Lag Angle Shown		
HV2563C	UB -CW	WY2563 Inc. B5963	D2565	N5957	0°	FM-X1-2B44-15		
JV2563C	UBL-CCW	X2563 Inc. D5963	E2565	TY5957	-50°	FM-E6B8H-40	FM-Z6B8G-40	
KV2563C	UB -CW	S2563‡ Inc. B5963	D2565	UY5957	0°	FM-XZ4B16B-15	FM-Z6B16J-30	
LV2563C	UC -CW	SZ2563 Inc. C5963	D2565	WY5957	-42°	FM-PE1B7-13 FM-XD1B7S-13 FM-XD1B7S-1-13 FM-XD1B7S-2-13 FM-XD1B7S-3-13 FM-XD1B7S-4-13	FM-XD1B7T-13 FM-XD1B7U-20 FM-XD1B7U-1-20 FM-XD1B7U-2-20 FM-XD2B7D-20	FM-XDE1B7S-13 FM-XDE1B7U-20 FM-XE2B7C-13 FM-XO2B7C-13 FM-XO2B7D-20
MV2563C	UB -CW	TX2563 Inc. B5963	E2565	N5957	0°	FM-XFE2B86-30	FM-XFE2B86A-30	
NV2563C	UB -CW	SZ2563 Inc. B5963	E2565	Y5957	+10°	FM-E6B97D-55		
PV2563C	UB -CW	HZ2563	D2565	FX5957	+35°	FM-XR6B44-55		
QV2563C	UBL-CCW	EY2563 Inc. D5963	D2565	XY5957	0°	FM-PE1B7R-1-20	FM-XD1B7R-20	FM-XD1B7R-1-15
RV2563C	UBL-CCW	AX2563	D2565	TY5957	-50°			
SV2563C	UC -CW	SZ2563 Inc. C5963	D2565	ZX5957	-30°	FM-XD1B7U-20	FM-XD1B7U-4-20	
TV2563C	UC -CW	ZX2563	D2565	ZX5957	-30°	FM-XD1B7U-1-20		
UV2563C	UB -CW	BX2563	D2565	Y5957	+10°	FM-LTPF2B102-35	FM-LTPF2B102A-35	
WV2563C	UB -CW	DZ2563	E2565	EY5957	+30°	FM-E6B8K-50		
XV2563	UBL-CCW	EY2563	E2565	ZY5957	-5°	FM-XD1B7R-1-15		
YV2563C	UB -CW	CZ2563 Inc. B5963	E2565	AZ5957	0°	FM-X4B7-1-20		
ZV2563C	UB -CW	WY2563	E2565	AZ5957	0°	FM-PE1-2B7C-1-20	FM-X1-2B7-1-20	FM-XFE2B7C-1-20
AW2563C	UDL-CCW	BZ2563 Inc. B5963	D2565	GY5957	-25°	FM-XV4C8-12 FM-XV4C19-15 FM-XV4C19B-12	FM-XV4C19C-12 FM-XVE4C19-15 FM-XVE4C19B-12	FM-XVE4C19C-12 FM-XVE4C44-12
BW2563C	UB -CW	CZ2563 Inc. B5963	E2565	Y5957	+10°	FM-LP4B7A-27 FM-X2B7B-20 FM-X4B7-30 FM-X4B7A-30	FM-X4B7B-22 FM-X4B7C-30 FM-XE2B30-10 FM-XE4B7-30	FM-XZE4B7-27 FM-XZE4B7A-30 FM-XZE4B16U-35
CW2563C	UB -CW	DZ2563 Inc. B5963	E2565	FX5957	+35°	FM-E6B44B-55 FM-X2B7A-30 FM-X2B7B-30	FM-X4B7-20 FM-X4B7A-30 FM-X4B7B-22	FM-XE4B7-30 FM-XR644-55

See footnote page 31

Imp. Cplg. Part No.	Type Rotation	Hub Assembly	Drive Spring	Shell	Lug Angle	Used on Magnetos Specify Lag Angle Shown		
DW2563C	UBL-CCW	X2563 Inc. D5963	E2565	DY5957	+10°	FM-E6B8J-20 FM-E6B11A-30	FM-XOR6B8B-30 FM-XOR6B8E-50	FM-Z6B8E-40 FM-Z6B8F-45
EW2563C	UBL-CCW	X2563 Inc. D5963	E2565	MY5957	+90°	FM-E6B69-20		
FW2563C	UB -CW	EZ2563	E2565	CX5957	+15°	FM-XF2B36D-30		
GW2563C	UAL-CCW	X2563 Inc. D5963	E2565	P5957	0°	FM-E6A11-30 FM-E6A14A-25 FM-E6A14C-40	FM-E6A14D-25 FM-E6A14E-25	FM-E6A14G-25 FM-XE4A14H-20
HW2563C	UB -CW	FZ2563 Inc. B5963	E2565	Y5957	+10°	FM-E6B8D-40	FM-XOR6B8A-40	FM-XOR6B8D-50
JW2563C	UB -CW	GZ2563 Inc. B5963	E2565	EY5957	+30°	FM-E6B16T-50 FM-E6B97A-50	FM-E6B97B-50	FM-XOR6B16H-50
KW2563C	UB -CW	VX2563	D2565	EY5957	+30°	FM-XF2B36F-30		
LW2563C	UBL-CCW	AX2563	D2565	LY5957	+30°	FM-XF2B36H-30		
MW2563C	UB -CW	GZ2563 Inc. B5963	E2565	CX5957	+15°	FM-E6B17-52 FM-E6B17A-52	FM-E6B17B-45	FM-XOR6B17-52
NW2563C	UDL-CCW	BZ2563 Inc. F5963	D2565	NY5957	-25°	FM-ZV4C73A-15 FM-ZV4C73B-15	FM-ZVE4C73A-15	FM-ZVE4C73B-15
PW2563C	UB -CW	CZ2563 Inc. B5963	E2565	PY5957	+15°	FM-X4B16S-35		
RW2563C	UB -CW	S2563‡ Inc. B5963	E2565	PY5957	+35°	FM-XE4B11-35 FM-XE4B11C-35	FM-XE4B11G-15 FM-XE4B11H-8	FM-XE4B11J-15
SW2563C	UBL-CCW	X2563 Inc. D5963	E2565	GX5957	+35°	FM-XE4B11A-35 FM-XE4B11B-15	FM-XE4B11D-35 FM-XE4B11E-15	FM-XE4B11F-8
TW2563C	UB -CW	HZ2563	D2565	DY5957	0°	FM-X2B6G-20		
UW2563C	UB -CW	S2563‡ Inc. B5963	E2565	AX5957	0°	FM-PE1B7R-20	FM-XD1B7R-20	FM-XDE2B71-20
VW2563C	UBL-CCW	JZ2563 Inc. N5963	E2565	M5957	0°	FM-XVE2B69-30		
WW2563C	UB -CW	GZ2563 Inc. B5963	E2565	N5957	0°	FM-E6B16R-50		
XW2563C	UA -CW	KZ2563	E2565	Q5957	0°	FM-X6A8D-50		
YW2563C	UB -CW	S2563‡ Inc. B5963	E2565	QY5957	+5°	FM-E6B16P-30	FM-XR6B16J-30	
ZW2563C	UA -CW	QZ2563 Inc. B5963	D2565	Q5957	0°	FM-XV6A11-20		

See footnote page 31

Imp. Cplg. Part No.	Type Rotation	Hub Assembly	Drive Spring	Shell	Lug Angle	Used on Magnetos Specify Lag Angle Shown		
AX2563C	UBL-CCW	AX2563	D2565	M5957	0°	FM-X1B2B-15 FM-X1B13A-20	FM-X1B103-12 FM-X1B103A-25	FM-XF2B19C-20
BX2563C	UB -CW	BX2563	D2565	N5957	0°	FM-X1B13-20 FM-X1B13B-20	FM-XF2B19-20 FM-XF2B19B-20	FM-XF2B86-30 FM-XY1B19-30
CX2563C	UC -CW	CX2563	D2565	S5957	-90°	FM-X1B12-15	FM-XF2A12-15	FM-XF2B12-15
EX2563C	UAL-CCW	R2563§	D2565	T5957	-20°	FM-X4A7-35		
FX2563C	UA -CW	Q2563*	D2565	U5957	-20°	FM-X4A7A-35		
GX2563C	UB -CW	EX2563 Inc. C5963	EX2565	Y5957	+10°	FM-XV4B7-30 FM-XV4B7A-30 FM-XV4B7B-30 FM-XV4B7C-30 FM-XVE4B7-30	FM-XVE4B7A-30 FM-XVE4B7C-30 FM-XVE4B7E-30 FM-XVE4B7F-30 FM-XVE4B7G-30	FM-XVE4B7J-30 FM-XVE4B89-30 FM-ZV4B7C-30 FM-ZVE4B7G-30
HX2563C	UB -CW	Q2563*	D2565	W5957	-10°	FM-X4B9A-25	FM-X4B11C-12	
JX2563C	UBL-CCW	R2563§	D2565	V5957	0°	FM-X2B6D-35	FM-X2B6F-25	
KX2563C	UA -CW	BX2563	D2565	Q5957	0°	FM-X1A13A-20 FM-X1A19A-20 FM-X1A20-30	FM-X1A20B-20 FM-X1A29-25	FM-X1A33-20 FM-X1A59-25
LX2563C	UAL-CCW	AX2563	D2565	P5957	0°	FM-01A10C-20 FM-01A10E-10 FM-01A10G-30 FM-X1A13-20	FM-X1A47-20 FM-X1A56-30 FM-X1A60-25 FM-XF2A2-40	FM-XF2A19C-20 FM-XF2A39-10 FM-XF2A30A-15
MX2563C	UC -CW	Z2563	D2565	Z5957	-25°	FM-X1B7-30 FM-X1B7B-30 FM-X1B7C-15 FM-X1B7E-30 FM-X1B7E-2-30 FM-X1B7F-30 FM-X1B7J-30	FM-X1B7L-30 FM-XC1B7-30 FM-XC1B7C-15 FM-XD1B7-30 FM-XD1B7B-30 FM-XD1B7C-15 FM-XD1B7K-30	FM-XCE1B7K-30 FM-XCE1B7M-30 FM-XCE1B7P-30 FM-X2B7-30 FM-XO2B7-30 FM-XO2B7A-30
NX2563C	UB -CW	Q2563*	D2565	AX5957	0°	FM-X2B14-20	FM-X2B14A-20	
PX2563C	UB -CW	CX2563	D2565	BX5957	0°	FM-X4B14-20	FM-X4B14A-30	
QX2563C	UB -CW	Q2563*	D2565	CX5957	+15°	FM-X4B19B-35	FM-XOR4B19-35	
RX2563C	UBL-CCW	AX2563	D2565	DX5957	0°	FM-JF2B69A-25 FM-JFE2B69A-25	FM-JFE2B69B-25	FM-XF2B69A-25
SX2563C	UB -CW	FX2563	E2565	EX5957	-5°	FM-XE4B5A-20		
TX2563C	UB -CW	S2563‡	E2565	N5957	0°	FM-XE4B8A-30 FM-XE4B8B-30	FM-XE4B8C-30 FM-XE4B8D-25	FM-XE4B8E-25 FM-XE4B26-20
UX2563C	UB -CW	Q2563*	D2565	FX5957	+35°	FM-LP4B11-35 FM-LTP4B11-35	FM-X4B11-35 FM-X4B11D-15	FM-X4B64-15 FM-XR4B11-25
VX2563C	UBL-CCW	XY2563	D2565	GX5957	+35°	FM-X2B36A-30 FM-X4B11A-35	FM-X4B11B-15 FM-X4B11E-15	FM-XOR4B11A-35

See footnote page 31

Imp. Cplg. Part No.	Type Rotation	Hub Assembly	Drive Spring	Shell	Lug Angle	Used on Magnetos Specify Lag Angle Shown		
WX2563C	UB-CW	S2563‡	E2565	Y5957	+10°	FM-E6B14-30 FM-E6B16-30 FM-E6B16B-30 FM-E6B16C-30 FM-E6B16D-30 FM-E6B16E-35 FM-E6B16F-35 FM-E6B16J-30	FM-E6B16L-30 FM-E6B97-30 FM-E6B98-30 FM-E6B98A-30 FM-LX6B16-30 FM-XOR6B8C-30 FM-XOR6B16-30	FM-XOR6B16A-30 FM-XOR6B16B-30 FM-XOR6B16C-20 FM-XOR6B16F-25 FM-XR6B16-30 FM-XR6B16B-30 FM-XY6B16-30
YX2563C	UB -CW	Q2563*	D2565	EX5957	-5°	MF-JE4B16A-20		
ZX2563C	UDL-CCW	HX2563	D2565	HX5957	-25°	FM-X2A39B-10		
AY2563C	UB -CW	JX2563	D2565	N5957	0°	FM-X4B5A-13		
BY2563C	UB -CW	Q2563*	D2565	LX5957	+25°	FM-X4B9C-25 FM-XOR6B25-45	FM-XR4B9C-25	FM-XR6B23-45
CY2563C	UA -CW	Q2563*	D2565	JX5957	0°			
DY2563C	UAL-CCW	R2563§	D2565	KX5957	0°	FM-OF2A10-40	FM-OFH2A10-40	
EY2563C	UC -CW	LX2563 Inc. B5963	D2565	Z5957	-25°	FM-X1B78-20 FM-X4A7-35 FM-XD1B7D-25 FM-XDE1B7D-25 FM-XDE1B7F-30 FM-XDE1B7G-25 FM-XDE1B7K-30	FM-XDE1B7M-30 FM-XDE1B7P-30 FM-XD1B7-30 FM-XE1B7A-30 FM-XE1B7B-30 FM-XE1B7D-30	FM-XE1B7F-30 FM-XE1B7G-30 FM-XE1B7H-30 FM-XE1B7N-30 FM-XE2B7-30 FM-XE2B7A-30
FY2563C	UBL-CCW	R2563§	D2565	MX5957	+15°	FM-J4B3-30		
GY2563C	UB -CW	CZ2563 Inc. B5963	E2565	Y5957	+10°	FM-X4B45A-35°	FM-XF2B7-30	
HY2563C	UD -CW	MX2563	D2565	HX5957	-25°	FM-X2A80-30		
JY2563C	UD -CW	NX2563	D2565	NX5957	-25°	FM-J2B78-20		
KY2563C	UD -CW	PX2563	D2565	PX5957	0°	FM-X4A73-30		
LY2563C	UB -CW	BX2563	D2565	Y5957	+10°	FM-X4B11-35	FM-X4B11A-35	
PY2563C	UBL-CCW	MX2563 Inc. D5963	D2565	RX5957	0°	FM-X1B26-25		
QY2563C	UBL-CCW	QX2563	D2565	M5957	0°	DRV2B for John Deere		
RY2563C	UBL-CCW	RX2563	D2565	V5957	0°	FM-X2B6F-25		
SY2563C	UB -CW	BX2563	D2565	AX5957	0°	FM-XD1B7U-3-20		
TY2563C	UA -CW	VX2563	D2565	Q5957	0°	FM-LTPF2A42-35 FM-XF2A13-25	FM-XF2A19B-20 FM-XF2A30-15	FM-XF2A30B-15
UY2563C	UAL-CCW	UX2563	D2565	P5957	0°	FM-FK2A2A-40	FM-OFR2A42J-35	

See footnote page 31

Imp. Cplg. Part No.	Type Rotation	Hub Assembly	Drive Spring	Shell	Lug Angle	Used on Magnetos Specify Lag Angle Shown		
WY2563C	UCL-CCW	YX2563 Inc. D5963	D2565	R5957	-25°	FM-X1A7E-25 FM-XE1A7-30 FM-XE1A7A-30	FM-XE1A7B-30 FM-XE1A7C-30 FM-XE1A7D-30	FM-XE1A7E-30 FM-XE1A7F-30
XY2563C	UB -CW	S2563‡ Inc. B5963	E2565	YX5957	+20°	FM-E6B16M-40 FM-E6B16N-40	FM-XR6B16A-40	FM-XR6B16G-40
ZY2563C	UBL-CCW	AX2563	D2565	AY5957	+30°	FM-XF2B36C-30		
AZ2563C	UBL-CCW	DY2563 Inc. D5963	D2565	M5957	0°	FM-FR3B86-30		
BZ2563C	UB -CW	S2563‡ Inc. B5963	E2565	EX5957	-5°	FM-XE4B16A-15 FM-XE4B16B-15 FM-XE4B16C-20 FM-XE4B16F-20 FM-XE4B16M-20	FM-XE4B16Q-20 FM-XE4B16R-20 FM-XE4B16W-20 FM-XE4B16Y-20 FM-XE4B89-15	FM-XZE4B16B-15 FM-XZE4B16F-20 FM-XZE4B16F-1-20 FM-XZE4B16S-15 FM-XZE4B16Z-15
CZ2563C	UAL-CCW	R2563§	D2565	TX5957	-10°	FM-X2B14B-10	FM-XDE2B14-10	FM-XDE2B14A-10
DZ2563C	UB -CW	WY2563 Inc. B5963	D2565	Y5957	+10°	FM-P1-2B7-30 FM-PE1-2B7C-30 FM-X1-2B7-30	FM-X1-2B7A-30 FM-XE1-2B7-30 FM-XE1-2B7A-30	FM-XE1-2B7C-30 FM-XE1-2B44-20
EZ2563C	UBL-CCW	EY2563 Inc. B5963	E2565	DX5957	0°	FM-JE1-2B69-15 FM-JE1-2B69B-15 FM-JE1-2B69C-30 FM-JE1-2B69D-15 FM-JFE2B69-25	FM-JFE2B69C-25 FM-PE1-2B69-15 FM-PE1-2B69B-15 FM-PE1-2B69D-15 FM-X1-2B69-15	FM-XE1-2B69-15 FM-XFE2B69-25 FM-XFE2B69A-25 FM-XFE2B69C-25 FM-XYE1-2B69-15
FZ2563C	UBL-CCW	R2563§	D2565	CY5957	-75°	FM-X4B5C-15		
GZ2563C	UB -CW	VY2563 Inc. C5963	E2565	Y5957	+10°	FM-XFE2B7-30 FM-XFE2B7B-30	FM-XFE2B7C-30	FM-XFE2B89-30
HZ2563C	UB -CW	CZ2563 Inc. B5963	E2565	DY5957	0°	FM-LTP4B16R-15 FM-X4B16G-15 FM-X4B16K-20 FM-X4B16R-15 FM-X4B16T-25 FM-X4B16U-10	FM-XE4B16E-15 FM-XE4B16J-25 FM-XE4B16V-25 FM-XY4B16G-25 FM-XYE4B16H-25 FM-XYE4B16K-25	FM-XYE4B16L-25 FM-XZ4B16K-20 FM-XZ4B16R-15 FM-XZE4B16K-25 FM-XZE4B16T-25
JZ2563C	UCL-CCW	NZ2563 Inc. D5963	E2565	Z5957	-25°	FM-X1B93-10	FM-XE1B93-10	
MZ2563C	UA -CW	CZ2563 Inc. B5963	D2565	JY5957	0°	FM-XYE4A94-18	FM-XYE4A94A-18	
NZ2563C	UB -CW	GZ2563 Inc. B5963	D2565	FY5957	+30°	FM-E6B16A-50	FM-XR6B16F-50	
PZ2563C	UB -CW	CZ2563 Inc. B5963	D2565	FY5957	-35°	FM-X4B44A-20	FM-X4B44B-20	FM-XE4B44A-20
QZ2563C	UD -CW	YY2563 Inc. E5963	D2565	GY5957	+10°	FM-XV4C16-10 FM-XV4C19A-15 FM-XV4C69-10 FM-XV4C69A-10 FM-XV4C73-10	FM-XV4C94A-20 FM-XVE4C19A FM-XVE4C69-10 FM-XVE4C69A-10 FM-XVE4C73-10	FM-XVE4C94-20 FM-XVE4C94A-20 FM-XVE4C100-12 FM-ZV4C73-10 FM-ZVE4C73-10
RZ2563C	UB -CW	S2563‡	E2565	Y5957	+10°	FM-XE4B17A-35		

See footnote page 31

Imp. Cplg. Part No.	Type Rotation	Hub Assembly	Drive Spring	Shell	Lug Angle	Used on Magneto Specify Lag Angle Shown		
SZ2563C	UC -CW	FY2563 Inc. B5963	D2565	UX5957	-52°	FM-LTP4B11A-35	FM-X1B90-18	
TZ2563C	UB -CW	S2563‡ Inc. B5963	D2565	DY5957	0°	FM-JE1-2B69A-15	FM-X1-2B69A-15	
UZ2563C	UB -CW	S2563‡ Inc. B5963	D2565	HY5957	-35°	FM-X4B14C-21 FM-XE4B14-20	FM-XE4B14B-21 FM-XE4B14C-21	FM-XE4B14E-21 FM-XZ4B14C-21
VZ2563C	UB -CW	S2563‡ Inc. B5963	D2565	CX5957	+15°	FM-E6B8A-37 FM-E6B8C-37 FM-E6B8M-37 FM-E6B16G-35	FM-E6B44A-37 FM-E6B44C-37 FM-X4B17C-45 FM-X4B17D-35	FM-XE4B17C-45 FM-XE4B17D-35 FM-XOR6B8-37
WZ2563C	UA -CW	S2563‡ Inc. B5963	D2565	Q5957	0°	FM-XE4A7-37 FM-XE4A7A-20 FM-XE4A8-25 FM-XE4A8A-20 FM-XE4A8B-15 FM-XE4A10-25 FM-XE4A14-20	FM-XE4A14A-20 FM-XE4A14B-20 FM-XE4A14F-20 FM-XE4A14G-20 FM-XE4A14J-20 FM-XE4A14K-20 FM-XE4A14L-20	FM-XE4A14M-20 FM-XE4A14N-20 FM-XE4A26-20 FM-XE4A30-20 FM-XE4A30A-20 FM-XE4A30B-25 FM-XE4A44D-20
XZ2563C	UBL-CCW	ZY2563	D2565	M5957	0°	FM-X1B20-15		
YZ2563C	UB -CW	AX2563	D2565	N5957	0°	FM-X1B2C-17		
ZZ2563C	UB -CW	BX2563	D2565	BY5957	+30°	FM-XF2B36A-30		

* When a dual keyway hub with 20°-35° lag is desired, order AY2563 hub.

§ When a triple keyway hub with 20°-35° - JD 35° lag is desired, order BY2563 hub.

‡ When a dual keyway hub with 25°-30° lag is desired, order CY2563 hub.

WHEN ORDERING IMPULSE COUPLINGS AND HUBS - ALWAYS SPECIFY LAG ANGLE

TABULATION of MAGNETOS and their IMPULSE COUPLINGS

Type Magneto	Impulse Coupling	Type	Lag Angle	Rot-ation
FM				
FM-4A10	T2563C**	UA	35	CW
FM-4A10A	U2563C‡‡	UAL	35	CCW
FM-6A2	T2563C**	UA	30	CW
FM-6A2A	U2563C‡‡	UAL	30	CCW
FM-6A3	T2563C**	UA	45	CW
FM-6A8	T2563C**	UA	40	CW
FM-6A8A	U2563C‡‡	UAL	40	CCW
FM-6A11	T2563C**	UA	45	CW
FM-6A14	U2563C‡‡	UAL	35	CCW
FM-6A17	T2563C**	UA	35	CW
FM-6A26	U2563C‡‡	UAL	27	CCW
FM-6A27	U2563C‡‡	UAL	45	CCW
FM-6A41	T2563C**	UA	37	CW
FM-6A48	T2563C**	UA	25	CW
FM-6A48A	U2563C‡‡	UAL	25	CCW
FM-6A67	T2563C**	UA	20	CW
FM-6B3	Q2563C*	UB	45	CW
FM-6B4	Q2563C*	UB	35	CW
FM-6B5	Q2563C*	UB	35	CW
FM-6B5A	Q2563C*	UB	20	CW
FM-6B10	Q2563C*	UB	35	CW
FM-6B16	WX2563C	UB	30	CW
FM-6B23	BY2563C	UB	45	CW
FM-E6				
FM-E6A11	GW2563C	UAL	30	CCW
FM-E6A14A	GW2563C	UAL	25	CCW
FM-E6A14C	GW2563C	UAL	40	CCW
FM-E6A14D	GW2563C	UAL	25	CCW
FM-E6A14E	GW2563C	UAL	25	CCW
FM-E6A14F	T2563C**	UA	40	CW
FM-E6A14G	GW2563C	UAL	25	CCW
FM-E6B8	X2563C	UBL	30	CCW
FM-E6B8A	VZ2563C	UB	37	CW
FM-E6B8B	X2563C	UBL	36	CCW
FM-E6B8C	VZ2563C	UB	37	CW
FM-E6B8D	HW2563C	UB	40	CW
FM-E6B8J	DW2563C	UBL	30	CCW
FM-E6B8H	JV2563C	UBL	40	CCW
FM-E6B8K	WV2563C	UB	50	CW
FM-E6B8M	VZ2563C	UB	37	CW
FM-E6B11A	DW2563C	UBL	30	CCW
FM-E6B14	WX2563C	UB	30	CW
FM-E6B16	WX2563C	UB	30	CW
FM-E6B16A	NZ2563C	UB	50	CW
FM-E6B16B	WX2563C	UB	30	CW
FM-E6B16C	WX2563C	UB	30	CW
FM-E6B16D	WX2563C	UB	30	CW
FM-E6B16E	WX2563C	UB	35	CW
FM-E6B16F	WX2563C	UB	35	CW
FM-E6B16G	VZ2563C	UB	35	CW
FM-E6B16H	CW2563C	UB	55	CW
FM-E6B16J	WX2563C	UB	30	CW
FM-E6B16L	WX2563C	UB	30	CW
FM-E6B16M	XY2563C	UB	40	CW
FM-E6B16N	XY2563C	UB	40	CW
FM-E6B16P	S2563C‡	UB	30	CW
FM-E6B16Q	S2563C‡	UB	40	CW
FM-E6B16R	WW2563C	UB	50	CW
FM-E6B16T	JW2563C	UB	50	CW
FM-E6B16U	S2563C‡	UB	20	CW
FM-E6B16V	S2563C‡	UB	25	CW
FM-E6B16W	HZ2563C	UB	30	CW
FM-E6B16Y	S2563C‡	UB	30	CW
FM-E6B17	MW2563C	UB	52	CW
FM-E6B17A	MW2563C	UB	52	CW
FM-E6B17B	MW2563C	UB	45	CW
FM-E6B44	CW2563C	UB	55	CW
FM-E6B44A	VZ2563C	UB	37	CW
FM-E6B44B	CW2563C	UB	55	CW
FM-E6B44C	VZ2563C	UB	37	CW
FM-E6B69	EW2563C	UBL	20	CCW
FM-E6B97	WX2563C	UB	30	CW
FM-E6B97A	JW2563C	UB	50	CW
FM-E6B97B	JW2563C	UB	50	CW
FM-E6B97C	S2563C‡	UB	30	CW
FM-E6B97D	NV2563C	UB	55	CW
FM-E6B98	WX2563C	UB	30	CW
FM-E6B98A	WX2563C	UB	30	CW
FM-FH				
FM-FH3A35B	UY2563C	UAL	35	CCW
FM-FK				
FM-FK2A2	LX2563C	UAL	20	CCW
FM-FK2A2A	UY2563C	UAL	40	CCW
FM-FK2A10	T2563C**	UAL	35	CCW
FM-FK2A10A	KX2563C	UA	35	CW
FM-FR				
FM-FR3B86	AZ2563C	UBL	30	CCW
FM-H				
FM-H4A10	T2563C**	UA	35	CW
FM H4A10A	U2563C‡‡	UAL	35	CCW
FM-H6A2	T2563C**	UA	30	CW
FM-H6A2A	U2563C‡‡	UAL	30	CCW
FM-H6A3	T2563C**	UA	45	CW
FM-H6A8	T2563C**	UA	40	CW
FM-H6A8A	U2563C‡‡	UAL	40	CCW
FM-H6A10	T2563C**	UA	35	CW
FM-H6A10A	U2563C‡‡	UAL	35	CCW
FM-H6A11	T2563C**	UA	45	CW
FM-H6A14	U2563C‡‡	UAL	35	CCW
FM-H6A14A	U2563C‡‡	UAL	30	CCW
FM-H6A17	T2563C**	UA	35	CW
FM-H6A26	U2563C‡‡	UAL	27	CCW
FM-H6A27	U2563C‡‡	UAL	45	CCW
FM-H6A41	T2563C**	UA	37	CW
FM-H6A48	T2563C**	UA	25	CW
FM-H6A48A	U2563C‡‡	UAL	25	CCW
FM-H6A67	T2563C**	UA	20	CW
FM-H6B3	Q2563C*	UB	45	CW
FM-H6B4	Q2563C*	UB	35	CW
FM-H6B5	Q2563C*	UB	35	CW
FM-H6B5A	Q2563C*	UB	20	CW
FM-H6B10	Q2563C*	UB	35	CW
FM-H6B10A	R2563C§	UBL	35	CCW
FM-H6B10B	R2563C§	UBL	45	CCW
FM-H6B16	WX2563C	UB	30	CW
FM-H6B16A	WX2563C	UB	30	CW
FM-H6B16B	WX2563C	UB	25	CW
FM-H6B16F	WX2563C	UB	30	CW
FM-H6B16M	S2563C‡	UB	25	CW
FM-H6B23	BY2563C	UB	45	CW
FM-J1				
FM-J1-2B69A	TZ2563C	UB	15	CW
FM-J1A2S	KX2563C	UA	15	CW
FM-J1A7	W2563C	UCL	30	CCW
FM-J1A7A	W2563C	UCL	30	CCW
FM-J1A7C	W2563C	UCL	30	CCW

See footnotes page 44

Type Magneto	Impulse Coupling	Type	Lag Angle	Rotation
FM-J1				
FM-J1A10A	W2563C	UCL	35	CCW
FM-J1A10B	W2563C	UCL	30	CCW
FM-J1A10G	V2563C	UC	30	CW
FM-J1A12	CX2563C	UC	15	CW
FM-J1A13	LX2563C	UAL	20	CCW
FM J1A13A	T2563C**	UA	20	CW
FM-J1A19A	KX2563C	UA	20	CW
FM-J1A20	T2563C**	UA	30	CW
FM-J1A20B	KX2563C	UA	20	CW
FM-J1A29	T2563C**	UA	25	CW
FM-J1A29A	V2563C	UC	25	CW
FM-J1A33	T2563C**	UA	20	CW
FM-J1A34	T2563C**	UA	25	CW
FM-J1A36	V2563C	UC	15	CW
FM-J1A37	V2563C	UC	20	CW
FM-J1A37A	W2563C	UCL	10	CCW
FM-J1A38	V2563C	UC	15	CW
FM-J1A38A	V2563C	UC	15	CW
FM-J1A39	W2563C	UCL	10	CCW
FM-J1A39A	W2563C	UCL	10	CCW
FM-J1A42	V2563C	UC	35	CW
FM-J1A43	W2563C	UCL	20	CCW
FM-J1A43A	V2563C	UC	25	CW
FM-J1A47	U2563C‡‡	UAL	20	CCW
FM-J1A50	V2563C	UC	12	CW
FM-J1A52A	V2563C	UC	10	CW
FM-J1A52B	V2563C	UC	10	CW
FM-J1A53	KX2563C	UA	30	CW
FM-J1A53A	KX2563C	UA	25	CW
FM-J1A56	LX2563C	UAL	30	CCW
FM-J1A59	KX2563C	UA	25	CW
FM-J1A60	LX2563C	UAL	25	CCW
FM-J1A79	V2563C	UC	20	CW
FM-J1A79A	V2563C	UC	20	CW
FM-J1A79B	V2563C	UC	20	CW
FM-J1A80	V2563C	UC	30	CW
FM-J1A81	V2563C	UC	20	CW
FM-J1B2A	BX2563C	UB	17	CW
FM-J1B2B	AX2563C	UBL	15	CCW
FM-J1B7	MX2563C	UC	30	CW
FM-J1B7B	MX2563C	UC	30	CW
FM-J1B7C	MX2563C	UC	15	CW
FM-J1B7D	EY2563C	UC	30	CW
FM-J1B7E	MX2563C	UC	30	CW
FM-J1B7F	MX2563C	UC	30	CW
FM-J1B11	LY2563C	UB	20	CW
FM-J1B11A	LY2563C	UB	20	CW
FM-J1B12	CX2563C	UC	15	CW
FM-J1B13	BX2563C	UB	20	CW
FM-J1B13A	AX2563C	UBL	20	CCW
FM-J1B13B	BX2563C	UB	20	CW
FM-J1B15A	BX2563C	UB	15	CW
FM-J1B16	BX2563C	UB	20	CW
FM-J1B19	BX2563C	UB	20	CW
FM-J1B26	PY2563C	UBL	25	CCW
FM-J1B75	Q2563C*	UB	35	CW
FM-J1B77	AX2563C	UBL	15	CCW
FM-J1B78	EY2563C	UC	20	CW
FM-J1B82	AX2563C	UBL	30	CCW
FM-J1B83	NX2563C	UB	30	CW
FM-J1B85	SY2563C	UB	30	CW
FM-J2				
FM-J2A6	U2563C‡‡	UAL	35	CCW
FM-J2A6A	U2563C‡‡	UAL	35	CCW
FM-J2A6B	U2563C‡‡	UAL	25	CCW
FM-J2A7	W2563C	UAL	30	CCW
FM-J2A13	T2563C**	UA	25	CW
FM-J2A13A	U2563C‡‡	UAL	25	CCW
FM-J2A16	T2563C**	UA	20	CW
FM-J2A16A	U2563C‡‡	UAL	20	CCW
FM-J2A16B	T2563C**	UA	20	CW
FM-J2A16C	U2563C‡‡	UAL	20	CCW
FM-J2A20	T2563C**	UA	20	CW
FM-J2				
FM-J2A36	R2563C§	UBL	30	CCW
FM-J2A37	U2563C‡‡	UAL	25	CCW
FM-J2A37A	T2563C**	UA	10	CW
FM-J2A39	U2563C‡‡	UAL	10	CCW
FM-J2A39A	U2563C‡‡	UAL	10	CCW
FM-J2A39B	ZX2563C	UDL	10	CCW
FM-J2A42	T2563C**	UA	35	CW
FM-J2A47	T2563C**	UA	30	CW
FM-J2A47A	U2563C‡‡	UAL	30	CCW
FM-J2A64	U2563‡‡	UA	20	CW
FM-J2B3	Q2563C*	UB	35	CW
FM-J2B6	R2563C§	UBL	35	CCW
FM-J2B6D	JX2563C	UBL	35	CCW
FM-J2B6E	R2563C§	UBL	25	CCW
FM-J2B6F	JX2563C	UBL	25	CCW
FM-J2B7	MX2563C	UC	30	CW
FM J2B7A	GY2563C	UB	30	CW
FM-J2B10	Q2563C*	UB	35	CW
FM-J2B10A	R2563C§	UBL	35	CCW
FM-J2B13	Q2563C*	UB	20	CW
FM-J2B13A	R2563C§	UBL	20	CCW
FM-J2B14	NX2563C	UB	20	CW
FM-J2B14A	NX2563C	UB	20	CW
FM-J2B16	Q2563C*	UB	20	CW
FM-J2B16A	R2563C§	UBL	20	CCW
FM-J2B35	X2563C	UBL	35	CCW
FM-J2B36	R2563C§	UBL	30	CCW
FM-J2B36A	VX2563C	UBL	30	CCW
FM-J2B44	Q2563C*	UB	20	CW
FM-J2B68	R2563C§	UBL	15	CCW
FM-J2B78	JY2563C	UD	20	CW
FM-J4				
FM-J4A2	U2563C‡‡	UAL	25	CCW
FM-J4A3	T2563C**	UA	30	CW
FM-J4A5	T2563C**	UA	40	CW
FM-J4A6	U2563C‡‡	UAL	20	CCW
FM-J4A7	EX2563C	UAL	35	CCW
FM-J4A7A	FX2563C	UA	35	CW
FM-J4A8	T2563C**	UA	20	CW
FM-J4A9	T2563C**	UA	35	CW
FM-J4A10	U2563C‡‡	UAL	30	CCW
FM-J4A11	T2563C**	UA	35	CW
FM-J4A11A	U2563C‡‡	UAL	35	CCW
FM-J4A11B	U2563C‡‡	UAL	35	CCW
FM-J4A12	T2563C**	UA	15	CW
FM-J4A14	T2563C**	UA	15	CW
FM-J4A14A	U2563C‡‡	UAL	15	CCW
FM-J4A14B	T2563C**	UA	20	CW
FM-J4A16	T2563C**	UA	25	CW
FM-J4A19	T2563C**	UA	25	CW
FM-J4A19A	U2563C‡‡	UAL	25	CCW
FM-J4A19B	U2563C‡‡	UAL	20	CCW
FM-J4A19C	T2563C**	UA	20	CW
FM-J4A23	U2563C‡‡	UAL	15	CCW
FM-J4A30B	T2563C**	UA	25	CW
FM-J4A64	U2563C‡‡	UAL	35	CCW
FM-J4A73	KY2563C	UD	30	CW
FM-J4B3	S2563C‡	UB	30	CW
FM-J4B3A	S2563C‡	UB	30	CW
FM-J4B4	S2563C‡	UB	25	CW
FM-J4B4A	Q2563C*	UB	25	CW
FM-J4B5	Q2563C*	UB	40	CW
FM-J4B5A	AY2563C	UB	13	CW
FM-J4B6	R2563C§	UBL	35	CCW
FM-J4B8	Q2563C*	UB	18	CW
FM-J4B8A	Q2563C*	UB	20	CW
FM-J4B8B	TX2563C	UB	30	CW
FM-J4B9	Q2563C*	UB	15	CW
FM-J4B9A	HX2563C	UB	25	CW
FM-J4B9B	Q2563C*	UB	15	CW
FM-J4B9C	BY2563C	UB	25	CW
FM-J4B10	Q2563C*	UB	35	CW
FM-J4B10B	Q2563C*	UBL	35	CCW

See footnotes page 44

Type Magneto	Impulse Coupling	Type	Lag Angle	Rot-ation
FM-J4				
FM-J4B11	UX2563C	UB	35	CW
FM-J4B11A	VX2563C	UBL	35	CCW
FM-J4B11B	VX2563C	UBL	15	CCW
FM-J4B11C	HX2563C	UB	12	CW
FM-J4B11D	UX2563C	UB	15	CW
FM-J4B13	Q2563C*	UB	20	CW
FM-J4B13A	R2563C§	UBL	15	CCW
FM-J4B14	PX2563C	UB	20	CW
FM-J4B14A	PX2563C	UB	30	CW
FM-J4B14B	R2563C§	UBL	15	CCW
FM-J4B16	Q2563C*	UB	15	CW
FM-J4B16A	Q2563C*	UB	20	CW
FM-J4B16B	Q2563C*	UB	15	CW
FM-J4B16C	Q2563C*	UB	20	CW
FM-J4B16D	R2563C§	UBL	15	CCW
FM-J4B16E	Q2563C*	UB	20	CW
FM-J4B16F	Q2563C*	UB	20	CW
FM-J4B19	Q2563C*	UBL	20	CCW
FM-J4B19A	Q2563C*	UB	20	CW
FM-J4B19B	QX2563C	UB	35	CW
FM-J4B19C	Q2563C*	UB	20	CW
FM-J4B23	QX2563C	UB	35	CW
FM-J4B73	S2563C‡	UB	15	CW
FM-J4B74	Q2563C*	UB	20	CW
FM-J4B86	S2563C‡	UB	30	CW
FM-JDE2				
FM-JDE2B71	NX2563C	UB	20	CW
FM-JE1				
FM-JE1-2B69	EZ2563C	UBL	15	CCW
FM-JE1-2B69A	TZ2563C	UB	15	CW
FM-JE1-2B69B	EZ2563C	UBL	15	CCW
FM-JE1-2B69C	EZ2563C	UBL	30	CCW
FM-JE1-2B69D	EZ2563C	UBL	15	CCW
FM-JE1A7	W2563C	UCL	30	CCW
FM-JE1A7A	W2563C	UCL	30	CCW
FM-JE1A7B	W2563C	UCL	30	CCW
FM-JE1A7C	W2563C	UCL	30	CCW
FM-JE1A7D	W2563C	UCL	30	CCW
FM-JE1A7E	WY2563C	UCL	30	CCW
FM-JE1A10	V2563C	UC	30	CW
FM-JE1A81	V2563C	UC	20	CW
FM-JE1B2A	BX2563C	UB	15	CW
FM-JE1B7	MX2563C	UC	30	CW
FM-JE1B7A	MX2563C	UC	30	CW
FM-JE1B7B	MX2563C	UC	30	CW
FM-JE1B7C	MX2563C	UC	30	CW
FM-JE1B7D	MX2563C	UC	30	CW
FM-JE1B7E	MX2563C	UC	30	CW
FM-JE1B7F	MX2563C	UC	30	CW
FM-JE1B7G	EY2563C	UC	30	CW
FM-JE1B7H	MX2563C	UC	30	CW
FM-JE1B7J	MX2563C	UC	15	CW
FM-JE2				
FM-JE2B7	MX2563C	UC	30	CW
FM-JE2B13	Q2563C*	UB	20	CW
FM-JE2B84	R2563C§	UBL	35	CCW
FM-JE4				
FM-JE4A7	T2563C**	UA	37	CW
FM-JE4A8	T2563C**	UA	25	CW
FM-JE4A14	T2563C**	UA	20	CW
FM-JE4A26	T2563C**	UA	20	CW
FM-JE4A30	T2563C**	UA	20	CW
FM-JE4A30A	T2563C**	UA	20	CW
FM-JE4A30B	T2563C**	UA	25	CW
FM-JE4				
FM-JE4A44D	T2563C**	UA	20	CW
FM-JE4B3	S2563C‡	UB	30	CW
FM-JE4B4	S2563C‡	UB	25	CW
FM-JE4B8	TX2563C	UB	20	CW
FM-JE4B8A	TX2563C	UB	30	CW
FM-JE4B8B	TX2563C	UB	30	CW
FM-JE4B8C	TX2563C	UB	25	CW
FM-JE4B10	R2563C§	UBL	30	CCW
FM-JE4B16	SX2563C	UB	15	CW
FM-JE4B16A	YX2563C	UB	15	CW
FM-JE4B16B	YX2563C	UB	15	CW
FM-JE4B16C	YX2563C	UB	20	CW
FM-JE4B16D	BZ2563C	UB	20	CW
FM-JE4B26	TX2563C	UB	20	CW
FM-JE4B44	Q2563C*	UB	20	CW
FM-JE4B73	S2563C‡	UB	15	CW
FM-JE4B73A	S2563C‡	UB	15	CW
FM-JE4B86	Q2563C*	UB	30	CW
FM-JF2				
FM-JF2A2	LX2563C	UAL	40	CCW
FM-JF2A10A	KX2563C	UA	35	CW
FM-JF2A10B	LX2563C	UAL	35	CCW
FM-JF2A10C	KX2563C	UA	30	CW
FM-JF2A12	CX2563C	UC	15	CW
FM-JF2A13	KX2563C	UA	25	CW
FM-JF2A19B	KX2563C	UA	20	CW
FM-JF2A19C	LX2563C	UAL	20	CCW
FM-JF2A30	KX2563C	UA	15	CW
FM-JF2A30A	LX2563C	UAL	15	CCW
FM-JF2A31	LX2563C	UAL	25	CCW
FM-JF2A31A	KX2563C	UA	25	CW
FM-JF2A39	LX2563C	UAL	10	CCW
FM-JF2A60	U2563C‡‡	UAL	25	CCW
FM-JF2B7	GZ2563C	UB	30	CW
FM-JF2B12	CX2563C	UC	15	CW
FM-JF2B19B	BX2563C	UB	20	CW
FM-JF2B19C	AX2563C	UBL	20	CCW
FM-JF2B69A	RX2563C	UBL	25	CCW
FM-JF2B86	BX2563C	UB	30	CW
FM-JFE2				
FM-JFE2A30	KX2563C	UA	15	CW
FM-JFE2B7	GZ2563C	UB	30	CW
FM-JFE2B7B	GZ2563C	UB	30	CW
FM-JFE2B44	Q2563C*	UB	20	CW
FM-JFE2B69	EZ2563C	UBL	25	CCW
FM-JFE2B69A	RX2563C	UBL	25	CCW
FM-JFE2B69B	RX2563C	UBL	25	CCW
FM-JFE2B69C	EZ2563C	UBL	25	CCW
FM-JFE2B86	BX2563C	UB	30	CW
FM-JGF2				
FM-JGF2A19	NX2563C	UB	20	CW
FM-JV4				
FM-JV4B7	GX2563C	UB	30	CW
FM-JV4B7A	GX2563C	UB	30	CW
FM-JV4B7B	GX2563C	UB	30	CW
FM-JV4B7C	GX2563C	UB	30	CW
FM-JV4B10	GX2563C	UB	20	CW
FM-JV4B75	GX2563C	UB	25	CW
FM-JVE4				
FM-JVE4B7	GX2563C	UB	30	CW
FM-JVE4B7A	GX2563C	UB	30	CW

See footnotes page 44

Type Magneto	Impulse Coupling	Type	Lag Angel	Rot-ation
FM-JVE4				
FM-JVE4B7B	GX2563C	UB	30	CW
FM-JVE4B7C	GX2563C	UB	30	CW
FM-JVE4B7D	GX2563C	UB	30	CW
FM-JVE4B7E	GX2563C	UB	30	CW
FM-K				
FM-K4A3	T2563C**	UA	30	CW
FM-K4A3A	U2563C‡‡	UAL	35	CCW
FM-K4A3B	T2563C**	UA	30	CW
FM-K4A4	T2563C**	UA	35	CW
FM-K4A4A	U2563C‡‡	UBL	35	CCW
FM-K4A5	T2563C**	UA	40	CW
FM-K4A5A	U2563C‡‡	UAL	40	CCW
FM-K4A7	U2563C‡‡	UAL	25	CCW
FM-K4A8	T2563C**	UA	20	CW
FM-K4A9	T2563C**	UA	25	CW
FM-K4A11	T2563C**	UA	35	CW
FM-K4A11A	T2563C**	UA	30	CW
FM-K4A14	U2563C‡‡	UAL	15	CCW
FM-K4A14A	T2563C**	UA	20	CW
FM-K4A19	T2563C**	UA	25	CW
FM-K4A19A	T2563C**	UA	30	CW
FM-K4A31	T2563C**	UA	45	CW
FM-K4A36	T2563C**	UA	35	CW
FM-K4A36A	T2563C**	UA	30	CW
FM-K4A40	T2563C**	UA	15	CW
FM-K4A41	T2563C**	UA	37	CW
FM-K4A64	T2563C**	UAL	30	CCW
FM-K4B3	S2563C‡	UB	30	CW
FM-K4B3A	Q2563C*	UBL	30	CCW
FM-K4B4	S2563C‡	UB	25	CW
FM-K4B4A	Q2563C*	UB	35	CW
FM-K4B19	Q2563C*	UB	35	CW
FM-K4B19A	Q2563C*	UB	20	CW
FM-K4B23	Q2563C*	UB	40	CW
FM-LP				
FM-LP4A11	T2563C**	UB	35	CW
FM-LP4B3	S2563C‡	UB	30	CW
FM-LP4B3C	R2563C§	UBL	30	CCW
FM-LP4B4	S2563C‡	UB	30	CW
FM-LP4B7A	BW2563C	UB	27	CW
FM-LP4B11	UX2563C‡‡	UB	35	CW
FM-LP4B16A	Q2563C*	UB	20	CW
FM-LP4B16B	S2563C‡	UB	15	CW
FM-LTP				
FM-LTP4-1B28	AV2563C	UB	40	CW
FM-LTP4A11	T2563C**	UA	35	CW
FM-LTP4A14B	T2563C**	UA	20	CW
FM-LTP4B3	S2563C‡	UB	30	CW
FM-PTP4B3C	R2563C§	UBL	30	CCW
FM-LTP4B4	S2563C‡	UB	35	CW
FM-LTP4B8B	Q2563C*	UB	30	CW
FM-LTP4B11	UX2563C	UB	35	CW
FM-LTP4B11A	SZ2563C	UBL	35	CCW
FM-LTP4B16A	Q2563C*	UB	20	CW
FM-LTP4B16B	S2563C‡	UB	15	CW
FM-LTP4B16R	HZ2563C	UB	15	CW
FM-LTPF				
FM-LTPF2A42	TY2563C	UA	35	CW
FM-LTPF2B102	UV2563C	UB	35	CW
FM-LTPF2B102A	UV2563C	UB	35	CW

Type Magneto	Impulse Coupling	Type	Lag Angel	Rot-ation
FM-LTX				
FM-LTX6A8D	T2563C**	UA	50	CW
FM-LTX6A17	T2563C**	UA	35	CW
FM-LTX6B3	S2563C‡	UB	45	CW
FM-LTX6B4	S2563C‡	UB	35	CW
FM-LTX6B4B	Q2563C*	UB	51	CW
FM-LTX6B8G	JV2563C	UBL	40	CCW
FM-LTX6B16	WX2563C	UB	30	CW
FM-LTX6B16A	WX2563C	UB	20	CW
FM-LTX6B16J	KV2563C	UB	30	CW
FM-LTX6B16M	S2563C‡	UB	25	CW
FM-LX				
FM-LX6B4	S2563C	UB	35	CW
FM-LX6B4B	Q2563C	UB	51	CW
FM-LX6B8A	HW2563C	UB	40	CW
FM-LX6B8G	JV2563C	UBL	40	CCW
FM-LX6B16	WX2563C	UB	30	CW
FM-01				
FM-01A10C	LX2563C	UAL	20	CCW
FM-01A10E	LX2563C	UAL	10	CCW
FM-01A10F	KX2563C	UA	30	CW
FM-01A10G	LX2563C	UAL	30	CCW
FM-01A10H	KX2563C	UA	15	CW
FM-03				
FM-03A33	U2563C‡‡	UAL	20	CCW
FM-03A33A	U2563C‡‡	UAL	20	CCW
FM-03A35	U2563C‡‡	UAL	35	CCW
FM-03A42B	T2563C**	UA	32	CW
FM-03A46	T2563C**	UA	30	CW
FM-03A46A	U2563C‡‡	UAL	30	CCW
FM-03A46B	T2563C**	UA	30	CW
FM-03A46C	U2563C‡‡	UAL	30	CCW
FM-03A57	T2563C**	UA	20	CW
FM-03A57A	T2563C**	UA	20	CW
FM-03A65	T2563C**	UA	45	CW
FM-03A65A	T2563C**	UA	45	CW
FM-03B2	Q2563C*	UB	35	CW
FM-03B2A	R2563C§	UBL	35	CCW
FM-03B2C	Q2563C*	UB	35	CW
FM-03B2D	R2563C§	UBL	35	CCW
FM-04				
FM-04A2	T2563C**	UA	30	CW
FM-04A2A	U2563C‡‡	UAL	30	CCW
FM-04A2B	T2563C**	UA	30	CW
FM-04A2C	U2563C‡‡	UAL	30	CCW
FM-04A4	T2563C**	UA	35	CW
FM-04A4A	U2563C‡‡	UAL	35	CCW
FM-04A4B	T2563C**	UA	35	CW
FM-04A4C	U2563C‡‡	UAL	35	CCW
FM-04A5	T2563C**	UA	40	CW
FM-04A5A	T2563C**	UA	40	CW
FM-04A8	T2563C**	UA	20	CW
FM-04A8A	U2563C‡‡	UAL	20	CCW
FM-04A8B	T2563C**	UA	20	CW
FM-04A8C	U2563C‡‡	UAL	20	CCW
FM-04A10	T2563C**	UA	35	CW
FM-04A14	U2563C‡‡	UAL	25	CCW
FM-04A14A	T2563C**	UA	15	CW
FM-04A14B	T2563C**	UA	15	CW
FM-04A14C	U2563C‡‡	UAL	25	CCW
FM-04A16	T2563C**	UA	45	CW
FM-04A16A	T2563C**	UA	45	CW
FM-04A17	T2563C**	UA	25	CW

See footnotes page 44

Type Magneto	Impulse Coupling	Type	Lag Angle	Rotation
FM-04				
FM-04A17A	T2563C**	UA	25	CW
FM-04A24	T2563C**	UA	35	CW
FM-04A24A	U2563C‡‡	UAL	35	CCW
FM-04A24B	U2563C‡‡	UAL	50	CCW
FM-04A24C	U2563C‡‡	UAL	25	CCW
FM-04A24D	T2563C**	UA	35	CW
FM-04A24E	U2563C‡‡	UAL	35	CCW
FM-04A24G	U2563C‡‡	UAL	25	CCW
FM-04A31	T2563C**	UA	37	CW
FM-04A31A	T2563C**	UA	37	CW
FM-04A36	T2563C**	UA	35	CW
FM-04A36A	T2563C**	UA	35	CW
FM-04A42	T2563C**	UA	32	CW
FM-04A42A	U2563C‡‡	UAL	32	CCW
FM-04A42B	T2563C**	UA	32	CW
FM-04A42C	U2563C‡‡	UAL	32	CCW
FM-04A57	T2563C**	UA	50	CW
FM-04B2	S2563C‡	UB	30	CW
FM-04B3	R2563C§	UBL	30	CCW
FM-04B3A	S2563C‡	UB	30	CW
FM-04B3B	S2563C‡	UB	30	CW
FM-04B3C	R2563C§	UBL	30	CCW
FM-04B3D	S2563C‡	UB	30	CW
FM-04B4	Q2563C*	UB	35	CW
FM-04B4A	S2563C‡	UB	25	CW
FM-04B4B	S2563C‡	UB	25	CW
FM-04B4C	R2563C§	UBL	35	CCW
FM-04B4D	Q2563C*	UB	35	CW
FM-04B8	Q2563C*	UB	30	CW
FM-04B8A	Q2563C*	UB	30	CW
FM-04B10A	Q2563C*	UB	25	CW
FM-04B11	UX2563C	UB	35	CW
FM-04B11A	UX2563C	UB	35	CW
FM-04B16	Q2563C*	UB	15	CW
FM-04B16A	Q2563C*	UB	20	CW
FM-04B16B	Q2563C*	UB	15	CW
FM-04B16C	Q2563C*	UB	20	CW
FM-04B19	QX2563C	UB	35	CW
FM-04B19A	QX2563C	UB	35	CW
FM-04B19B	QX2563C	UB	35	CW
FM-06				
FM-06A2	U2563C‡‡	UAL	45	CCW
FM-06A2A	U2563C‡‡	UAL	45	CCW
FM-06A2B	U2563C‡‡	UAL	45	CCW
FM-06A3	T2563C**	UA	45	CW
FM-06A3A	T2563C**	UA	45	CW
FM-06A4	T2563C**	UA	35	CW
FM-06A4A	U2563C‡‡	UAL	35	CCW
FM-06A4B	T2563C**	UA	35	CW
FM-06A4C	U2563C‡‡	UAL	35	CCW
FM-06A7	T2563C**	UA	50	CW
FM-06A7A	T2563C**	UA	50	CW
FM-06A8	U2563C‡‡	UAL	35	CCW
FM-06A8A	U2563C‡‡	UAL	30	CCW
FM-06A8C	U2563C‡‡	UAL	30	CCW
FM-06A10	U2563C‡‡	UAL	30	CCW
FM-06A14	T2563C**	UA	40	CW
FM-06A14A	U2563C‡‡	UAL	40	CCW
FM-06A14B	T2563C**	UA	40	CW
FM-06A14C	U2563C‡‡	UAL	40	CCW
FM-06A17	T2563C**	UA	35	CW
FM-06A17A	T2563C**	UA	35	CW
FM-06A17B	T2563C**	UA	35	CW
FM-06A24	T2563C**	UA	50	CW
FM-06A24A	U2563C‡‡	UAL	50	CCW
FM-06A26	U2563C‡‡	UAL	50	CCW
FM-06A26A	U2563C‡‡	UAL	27	CCW
FM-06A26B	U2563C‡‡	UAL	50	CCW
FM-06A26C	U2563C‡‡	UAL	27	CCW
FM-06A34	T2563C**	UA	30	CW
FM-06A34A	T2563C**	UA	30	CW
FM-06A40	U2563C‡‡	UAL	25	CCW
FM-06				
FM-06A40A	U2563C‡‡	UAL	25	CCW
FM-06A42	T2563C**	UA	42	CW
FM-06A42A	U2563C‡‡	UAL	42	CCW
FM-06A42B	T2563C**	UA	42	CW
FM-06A42C	U2563C‡‡	UAL	42	CW
FM-06A61	T2563C**	UA	25	CW
FM-06A61A	T2563C**	UA	25	CW
FM-06B3	S2563C‡	UB	45	CW
FM-06B3A	S2563C‡	UB	45	CW
FM-06B4	Q2563C*	UB	35	CW
FM-06B4A	Q2563C*	UB	35	CW
FM-06B4B	Q2563C*	UB	50	CW
FM 06B10	R2563C§	UBL	35	CCW
FM-06B10A	R2563C§	UBL	35	CCW
FM-06B10B	R2563C§	UBL	45	CCW
FM-06B16	WX2563C	UB	30	CW
FM-06B16A	WX2563C	UB	20	CW
FM-06B16B	WX2563C	UB	30	CW
FM-06B16C	WX2563C	UB	20	CW
FM-0F2				
FM-0F2A10	DY2563C	UAL	40	CCW
FM-0F2A31	LX2563C	UAL	25	CCW
FM-0F2A31A	KX2563C	UA	25	CW
FM-0F2A31B	LX2563C	UAL	25	CCW
FM-0F2A31C	KX2563C	UA	25	CW
FM-0F2A42	KX2563C	UA	35	CW
FM-0F2A42D	LX2563C	UAL	15	CCW
FM-0F2A42E	KX2563C	UA	15	CW
FM-0F2A42F	KX2563C	UA	15	CW
FM-0F2A42G	KX2563C	UA	32	CW
FM-0F2A42H	LX2563C	UAL	32	CCW
FM-0F2A42J	LX2563C	UAL	35	CCW
FM-0F2A42K	KX2563C	UA	35	CW
FM-0F2A42L	LX2563C	UAL	15	CCW
FM-0F2A42M	KX2563C	UA	15	CW
FM-0F2A42N	KX2563C	UA	15	CW
FM-0F2A46	KX2563C	UA	15	CW
FM-0F2A46A	LX2563C	UAL	25	CCW
FM-0F2A46B	KX2563C	UA	35	CW
FM-0F2A46C	LX2563C	UAL	35	CCW
FM-0F2A46D	KX2563C	UA	15	CW
FM-0F2A46E	LX2563C	UAL	25	CCW
FM-0F2A46F	KX2563C	UA	35	CW
FM-0F2A46G	LX2563C	UAL	35	CCW
FM-0F2A54	LX2563C	UAL	20	CCW
FM-0F2A54A	LX2563C	UAL	20	CCW
FM-0F2B2B	BX2563C	UB	45	CW
FM-0F2B2C	LX2563C	UAL	45	CCW
FM-0F2B10	AX2563C	UBL	25	CCW
FM-0F3				
FM-0F3A35	LX2563C	UAL	25	CCW
FM-0F3A42B	T2563C**	UA	32	CW
FM-0F3A42C	U2563C‡‡	UAL	32	CCW
FM-0F3A57C	LX2563C	UAL	45	CCW
FM-0F3A65	KX2563C	UA	30	CW
FM-0F3A65A	LX2563C	UAL	30	CCW
FM-0F3A65B	KX2563C	UA	30	CW
FM-0FH2				
FM-0FH2A31	LX2563C	UAL	25	CCW
FM-0FH2A31A	KX2563C	UA	25	CW
FM-0FH2A31B	LX2563C	UAL	25	CCW
FM-0FH2A31C	KX2563C	UA	25	CW
FM-0FH2A42	KX2563C	UA	32	CW
FM-0FH2A42A	LX2563C	UAL	32	CCW
FM-0FH2A42B	LX2563C	UAL	35	CCW
FM-0FH2A42C	KX2563C	UA	35	CW

See footnotes page 44

Type Magneto	Impulse Coupling	Type	Lag Angle	Rotation
FM-OFH2				
FM-OFH2A42D	LX2563C	UAL	15	CCW
FM-OFH2A42E	KX2563C	UA	15	CW
FM-OFH2A42F	KX2563C	UA	15	CW
FM-OFH2A42G	KX2563C	UA	32	CW
FM-OFH2A42H	LX2563C	UAL	32	CCW
FM-OFH2A42J	LX2563C	UAL	35	CCW
FM-OFH2A42K	KX2563C	UA	35	CW
FM-OFH2A42L	LX2563C	UAL	15	CCW
FM-OFH2A42M	KX2563C	UA	15	CW
FM-OFH2A42N	KX2563C	UA	15	CW
FM-OFH2A46	KX2563C	UA	15	CW
FM-OFH2A46A	LX2563C	UAL	25	CCW
FM-OFH2A46B	KX2563C	UA	35	CW
FM-OFH2A46C	KX2563C	UA	35	CW
FM-OFH2A46D	KX2563C	UA	15	CW
FM-OFH2A46E	LX2563C	UAL	25	CCW
FM-OFH2A46F	KX2563C	UA	35	CW
FM-OFH2A46G	LX2563C	UAL	35	CCW
FM-OFH2A54	LX2563C	UAL	20	CCW
FM-OFH2A54A	U2563C‡‡	UAL	20	CCW
FM-OFH2B2B	BX2563C	UB	45	CW
FM-OFH2B2C	AX2563C	UBL	45	CCW
FM-OFH2B10	AX2563C	UBL	25	CCW
FM-OFH3				
FM-OFH3A35	LX2563C	UAL	25	CCW
FM-OFH3A42B	T2563C**	UA	32	CW
FM-OFH3A42C	U2563C‡‡	UAL	32	CCW
FM-OFH3A65	KX2563C	UA	30	CW
FM-OFR2				
FM-OFR2A10A	DY2563C	UAL	40	CCW
FM-OFR2A31	LX2563C	UAL	25	CCW
FM-OFR2A31A	KX2563C	UA	25	CW
FM-OFR2A42	KX2563C	UA	30	CW
FM-OFR2A42A	LX2563C	UAL	32	CCW
FM-OFR2A42B	LX2563C	UAL	35	CCW
FM-OFR2A42C	KX2563C	UA	35	CW
FM-OFR2A42E	KX2563C	UA	15	CW
FM-OFR2A42J	UY2563C	UAL	35	CCW
FM-OFR2A42P	KX2563C	UA	30	CW
FM-OFR2A46	KX2563C	UA	15	CW
FM-OFR2A54	LX2563C	UAL	20	CCW
FM-OFR2B2	BX2563C	UB	45	CW
FM-OFR2B2A	AX2563C	UBL	45	CCW
FM-OFR2B2B	BX2563C	UB	45	CW
FM-OFR2B10	AX2563C	UBL	25	CCW
FM-OH3				
FM-OH3A33	U2563C‡‡	UAL	20	CCW
FM-OH3A35	U2563C‡‡	UAL	35	CCW
FM-OH3A42B	T2563C**	UA	32	CW
FM-OH3A46	T2563C**	UA	30	CW
FM-OH3A46A	U2563C‡‡	UAL	30	CCW
FM-OH3A46B	T2563C**	UA	30	CW
FM-OH3A46C	U2563C‡‡	UAL	30	CCW
FM-OH3A57	T2563C**	UA	20	CW
FM-OH3B2	Q2563C*	UB	35	CW
FM-OH3B2A	R2563C§	UBL	35	CCW
FM-OH4				
FM-OH4A2	T2563C**	UA	30	CW
FM-OH4A2A	U2563C‡‡	UAL	30	CCW
FM-OH4A2B	T2563C**	UA	30	CW
FM-OH4A2C	U2563C‡‡	UAL	30	CCW
FM-OH4A3	U2563C‡‡	UAL	30	CCW
FM-OH4A3A	T2563C**	UA	30	CW
FM-OH4A4	T2563C**	UA	35	CW
FM-OH4				
FM-OH4A4A	U2563C‡‡	UAL	35	CCW
FM-OH4A4B	T2563C**	UA	35	CW
FM-OH4A4C	U2563C‡‡	UAL	35	CCW
FM-OH4A5	T2563C**	UA	40	CW
FM-OH4A5A	T2563C**	UA	40	CW
FM-OH4A8	T2563C**	UA	20	CW
FM-OH4A8A	U2563C‡‡	UAL	20	CCW
FM-OH4A8B	T2563C**	UA	20	CW
FM-OH4A8C	U2563C‡‡	UAL	20	CCW
FM-OH4A10	T2563C**	UA	35	CW
FM-OH4A10A	U2563C‡‡	UAL	35	CCW
FM-OH4A14	U2563C‡‡	UAL	25	CCW
FM-OH4A14A	T2563C**	UA	15	CW
FM-OH4A14C	U2563C‡‡	UAL	25	CCW
FM-OH4A16	T2563C**	UA	45	CW
FM-OH4A16A	T2563C**	UA	45	CW
FM-OH4A17	T2563C**	UA	25	CW
FM-OH4A17A	T2563C**	UA	25	CW
FM-OH4A24	T2563C**	UA	35	CW
FM-OH4A24A	U2563C‡‡	UAL	35	CCW
FM-OH4A24B	U2563C‡‡	UAL	50	CCW
FM-OH4A24C	U2563C‡‡	UAL	25	CCW
FM-OH4A31	T2563C**	UA	37	CW
FM-OH4A31A	T2563C**	UA	37	CW
FM-OH4A36	T2563C**	UA	35	CW
FM-OH4A36A	T2563C**	UA	35	CW
FM-OH4A42	T2563C**	UA	32	CW
FM-OH4A42A	U2563C‡‡	UAL	32	CCW
FM-OH4A42B	T2563C**	UAL	32	CCW
FM-OH4A42C	U2563C‡‡	UAL	32	CCW
FM-OH4A57	T2563C**	UA	50	CW
FM-OH4A64	T2563C**	UA	30	CW
FM-OH4B3	R2563C§	UBL	30	CCW
FM-OH4B3A	S2563C‡	UB	30	CW
FM-OH4B3B	S2563C‡	UB	30	CW
FM-OH4B3C	R2563C§	UBL	30	CCW
FM-OH4B3D	S2563C‡	UB	30	CW
FM-OH4B4	Q2563C*	UB	35	CW
FM-OH4B4A	S2563C‡	UB	25	CW
FM-OH4B4B	S2563C‡	UB	25	CW
FM-OH4B4C	R2563C§	UBL	35	CCW
FM-OH4B4D	Q2563C*	UB	35	CW
FM-OH4B8	Q2563C*	UB	30	CW
FM-OH4B10A	Q2563C*	UB	25	CW
FM-OH4B11	UX2563C	UB	35	CW
FM-OH4B11A	UX2563C	UB	35	CW
FM-OH4B16	Q2563C*	UB	15	CW
FM-OH4B16A	Q2563C*	UB	20	CW
FM-OH4B16B	Q2563C*	UB	15	CW
FM-OH4B16C	Q2563C*	UB	20	CW
FM-OH4B19	QX2563C	UB	35	CW
FM-OH4B19A	QX2563C	UB	35	CW
FM-OH4B19B	QX2563C	UB	35	CW
FM-OH6				
FM-OH6A2	U2563C‡‡	UAL	45	CCW
FM-OH6A2A	U2563C‡‡	UAL	45	CCW
FM-OH6A3	T2563C**	UA	45	CW
FM-OH6A3A	T2563C**	UA	45	CW
FM-OH6A4	T2563C**	UA	35	CW
FM-OH6A4A	U2563C‡‡	UAL	35	CCW
FM-OH6A4B	T2563C**	UA	50	CW
FM-OH6A2	U2563C‡‡	UAL	45	CCW
FM-OH6A2A	U2563C‡‡	UAL	45	CCW
FM-OH6A3	T2563C**	UA	45	CW
FM-OH6A4B	T2563C**	UA	50	CW
FM-OH6A4C	U2563C‡‡	UAL	50	CCW
FM-OH6A7	T2563C**	UA	50	CW
FM-OH6A7A	T2563C**	UA	50	CW
FM-OH6A8	U2563C‡‡	UAL	35	CCW
FM-OH6A8A	U2563C‡‡	UAL	30	CCW
FM-OH6A8C	U2563C‡‡	UAL	30	CCW
FM-OH6A10	U2563C‡‡	UAL	30	CCW
FM-OH6A14	T2563C**	UA	40	CW

See footnotes page 44

IMPULSE COUPLINGS FOR FAIRBANKS-MORSE MAGNETOS

Type Magneto	Impulse Coupling	Type	Lag Angle	Rotation
FM-OH6				
FM-OH6A14A	U2563C‡‡	UAL	40	CCW
FM-OH6A14B	T2563C**	UA	40	CW
FM-OH6A14C	U2563C‡‡	UAL	40	CCW
FM-OH6A17	T2563C**	UA	35	CW
FM-OH6A17A	T2563C**	UA	35	CW
FM-OH6A17B	T2563C**	UA	35	CW
FM-OH6A24	T2563C**	UA	50	CW
FM-OH6A24A	U2563C‡‡	UAL	50	CCW
FM-OH6A26	U2563C‡‡	UAL	50	CCW
FM-OH6A26A	U2563C‡‡	UAL	27	CCW
FM-OH6A26C	U2563C‡‡	UAL	27	CCW
FM-OH6A34	T2563C**	UA	30	CW
FM-OH6A34A	T2563C**	UA	30	CW
FM-OH6A40	U2563C‡‡	UAL	25	CCW
FM-OH6A40A	U2563C‡‡	UAL	25	CCW
FM-OH6A42	T2563C**	UA	42	CW
FM-OH6A42A	U2563C‡‡	UAL	42	CCW
FM-OH6A42B	T2563C**	UA	42	CW
FM-OH6A42C	U2563C‡‡	UAL	42	CCW
FM-OH6A61	T2563C**	UA	25	CW
FM-OH6B3	S2563C‡	UB	45	CW
FM-OH6B3A	S2563C‡	UB	45	CW
FM-OH6B4	Q2563C*	UB	35	CW
FM-OH6B4A	Q2563C*	UB	35	CW
FM-OH6B4B	Q2563C*	UB	50	CW
FM-OH6B10	R2563C§	UBL	35	CCW
FM-OH6B10A	R2563C§	UBL	35	CCW
FM-OH6B10B	R2563C§	UBL	45	CCW
FM-OH6B10C	Q2563C*	UB	40	CW
FM-OH6B16	WX2563C	UB	30	CW
FM-OH6B16A	WX2563C	UB	20	CW
FM-OH6B16B	WX2563C	UB	30	CW
FM-OH6B16C	WX2563C	UB	20	CW
FM-OH6B16J	S2563C‡	UB	30	CW
FM-OH6B16L	S2563C‡	UB	20	CW
FM-OH6B17	S2563C‡	UB	45	CW
FM-OH6B23	BY2563C	UB	45	CW
FM-OR4				
FM-OR4A2	T2563C**	UA	30	CW
FM-OR4A2A	U2563C‡‡	UAL	30	CCW
FM-OR4A2B	T2563C**	UA	30	CW
FM-OR4A2C	U2563C‡‡	UAL	30	CCW
FM-OR4A3	T2563C**	UA	30	CW
FM-OR4A4	T2563C**	UA	35	CW
FM-OR4A4A	U2563C‡‡	UAL	35	CCW
FM-OR4A4B	T2563C**	UA	35	CW
FM-OR4A4C	U2563C‡‡	UAL	35	CCW
FM-OR4A5	T2563C**	UA	40	CW
FM-OR4A8A	U2563C‡‡	UAL	20	CCW
FM-OR4A8B	T2563C**	UA	20	CW
FM-OR4A10	T2563C**	UA	35	CW
FM-OR4A14	U2563C‡‡	UAL	25	CCW
FM-OR4A14A	T2563C**	UA	15	CW
FM-OR4A14C	U2563C‡‡	UAL	25	CCW
FM-OR4A16	T2563C**	UA	45	CW
FM-OR4A17	T2563C**	UA	25	CW
FM-OR4A17A	T2563C**	UA	25	CW
FM-OR4A24	T2563C**	UA	35	CW
FM OR4A24A	U2563C‡‡	UAL	35	CCW
FM-OR4A24B	U2563C‡‡	UAL	50	CCW
FM-OR4A31	T2563C**	UA	37	CW
FM-OR4A36	T2563C**	UA	35	CW
FM-OR4A42	T2563C**	UA	32	CW
FM-OR4A42A	U2563C‡‡	UAL	32	CCW
FM-OR4A57	T2563C**	UA	50	CW
FM-OR4B3	R2563C§	UBL	30	CCW
FM-OR4B3A	S2563C‡	UB	30	CW
FM-OR4B3C	R2563C§	UBL	30	CCW
FM-OR4B3D	S2563C‡	UB	30	CW
FM-OR4B4	S2563C‡	UB	25	CW
FM-OR4B4A	Q2563C*	UB	35	CW
FM-OR4B4B	S2563C‡	UB	25	CW
FM-OR4B4C	R2563C§	UBL	35	CCW
FM-OR4				
FM-OR4B8	Q2563C*	UB	30	CW
FM-OR4B10	Q2563C*	UB	45	CW
FM-OR4B10A	R2563C§	UBL	35	CCW
FM-OR4B11	UX2563C	UB	35	CW
FM-OR4B11B	VX2563C	UBL	15	CCW
FM-OR4B16	Q2563C*	UB	15	CW
FM-OR4B16A	Q2563C*	UB	20	CW
FM-OR4B16B	Q2563C*	UB	15	CW
FM-OR4B16C	Q2563C*	UB	20	CW
FM-OR4B16D	Q2563C*	UB	15	CW
FM-OR4B16E	Q2563C*	UB	20	CW
FM-OR4B19B	QX2563C	UB	35	CW
FM-OR6				
FM-OR6A2	U2563C‡‡	UAL	45	CCW
FM-OR6A2A	U2563C‡‡	UAL	45	CCW
FM-OR6A3	T2563C**	UA	45	CW
FM-OR6A3A	T2563C**	UA	45	CW
FM-OR6A4	T2563C**	UA	35	CW
FM-OR6A4A	U2563C‡‡	UAL	35	CCW
FM-OR6A4B	T2563C**	UA	50	CW
FM-OR6A4C	U2563C‡‡	UAL	50	CCW
FM-OR6A7B	T2563C**	UA	50	CW
FM-OR6A8	U2563C‡‡	UAL	35	CCW
FM-OR6A8A	U2563C‡‡	UAL	30	CCW
FM-OR6A8C	U2563C‡‡	UAL	30	CCW
FM-OR6A14	T2563C**	UA	40	CW
FM-OR6A14B	T2563C**	UA	40	CW
FM-OR6A14C	U2563C‡‡	UAL	40	CCW
FM-OR6A17	T2563C**	UA	35	CW
FM-OR6A24B	T2563C**	UA	50	CW
FM-OR6A24C	U2563C‡‡	UAL	50	CCW
FM-OR6A26C	U2563C‡‡	UAL	27	CCW
FM-OR6A34A	T2563C**	UA	30	CW
FM-OR6A40A	U2563C‡‡	UAL	25	CCW
FM-OR6A42B	T2563C**	UA	42	CW
FM-OR6A42C	U2563C‡‡	UAL	42	CCW
FM-OR6A61	T2563C**	UA	25	CW
FM-OR6A61A	T2563C**	UA	25	CW
FM-OR6B3	S2563C‡	UB	45	CW
FM-OR6B3A	S2563C‡	UB	45	CW
FM-OR6B4	Q2563C*	UB	35	CW
FM-OR6B4A	Q2563C*	UB	35	CW
FM-OR6B4B	Q2563C*	UB	50	CW
FM-OR6B4C	Q2563C*	UB	50	CW
FM-OR6B10	Q2563C*	UB	40	CW
FM-OR6B10A	R2563C§	UBL	40	CCW
FM-OR6B10B	R2563C§	UBL	45	CCW
FM-OR6B10C	R2563C§	UBL	45	CCW
FM-OR6B10E	R2563C§	UBL	35	CCW
FM-OR6B14	Q2563C*	UB	40	CW
FM-OR6B16	WX2563C	UB	30	CW
FM-OR6B16A	WX2563C	UB	20	CW
FM-OR6B16B	WX2563C	UB	30	CW
FM-OR6B16C	WX2563C	UB	20	CW
FM-OR6B16D	WX2563C	UB	30	CW
FM-OR6B16E	WX2563C	UB	20	CW
FM-OR6B23	BY2563C	UB	45	CW
FM-P1-2				
FM-P1-2B7	DZ2563C	UB	30	CW
FM-P1-2B7-1	DZ2563C	UB	20	CW
FM-PE1-2				
FM-PE1-2B7C	DZ2563C	UB	30	CW
FM-PE1-2B7C-1	ZV2563C	UB	20	CW
FM-PE1-2B69	EX2563C	UBL	15	CCW
FM-PE1-2B69B	EZ2563C	UBL	15	CCW
FM-PE1-2B69D	EZ2563C	UBL	15	CCW

See footnotes page 44

Type Magneto	Impulse Coupling	Type	Lag Angle	Rotation
FM-PE				
FM-PE1B7	LV2563C	UC	13	CW
FM-PE1B7R	UW2563C	UBL	20	CCW
FM-PE1B7R-1	QV2563C	UBL	20	CCW
FM-R				
FM-R4A3	T2563C**	UA	30	CW
FM-R4A4	T2563C**	UA	35	CW
FM-R4A10	T2563C**	UA	35	CW
FM-R4A10A	U2563C‡‡	UAL	35	CCW
FM-R4A41	T2563C**	UA	37	CW
FM-R4B3	Q2563C*	UB	30	CW
FM-R4B3B	R2563C§	UAL	30	CCW
FM-R4B4	Q2563C*	UB	35	CW
FM-R6A2	T2563C**	UA	30	CW
FM-R6A2A	U2563C‡‡	UAL	30	CCW
FM-R6A3	T2563C**	UA	45	CW
FM-R6A7	T2563C**	UA	50	CW
FM-R6A7B	U2563C‡‡	UAL	50	CCW
FM-R6A8	T2563C**	UA	40	CW
FM-R6A8A	U2563C‡‡	UAL	40	CCW
FM-R6A10	T2563C**	UA	35	CW
FM-R6A10A	U2563C‡‡	UAL	35	CCW
FM-R6A14	U2563C‡‡	UAL	25	CCW
FM-R6A14A	U2563C‡‡	UAL	30	CCW
FM-R6A17	T2563C**	UA	35	CW
FM-R6A26	U2563C‡‡	UAL	27	CCW
FM-R6A27	U2563C‡‡	UAL	45	CCW
FM-R6A41	T2563C**	UA	37	CW
FM-R6A48	T2563C**	UA	25	CW
FM-R6A48A	U2563C‡‡	UAL	25	CCW
FM-R6A67	T2563C**	UA	20	CW
FM-R6B3	Q2563C*	UB	45	CW
FM-R6B4	Q2563C*	UB	35	CW
FM-R6B4B	Q2563C*	UB	50	CW
FM-R6B10	Q2563C*	UB	35	CW
FM-R6B10B	R2563C§	UBL	45	CCW
FM-R6B10C	R2563C§	UBL	45	CCW
FM-R6B16	WX2563C	UB	30	CW
FM-R6B16A	XY2563C	UB	40	CW
FM-R6B16B	WX2563C	UB	30	CW
FM-R6B16C	XY2563C	UB	40	CW
FM-R6B23	BY2563C	UB	45	CW
FM-X1-2				
FM-X1-2B7	DZ2563C	UB	30	CW
FM-X1-2B7-1	ZV2563C	UB	20	CW
FM-X1-2B7A	DZ2563C	UB	30	CW
FM-X1-2B44	HV2563C	UB	20	CW
FM-X1-2B69	EZ2563C	UBL	15	CCW
FM-X1-2B69A	TZ2563C	UB	15	CW
FM-X1				
FM-X1A7	W2563C	UCL	30	CCW
FM-X1A7-1	W2563C	UCL	30	CCW
FM-X1A7C	W2563C	UCL	30	CCW
FM-X1A7E	WY2563C	UCL	25	CCW
FM-X1A7E-1	MX2563C	UC	20	CW
FM-X1A7F	W2563C	UCL	30	CCW
FM-X1A10A	W2563C	UCL	35	CCW
FM-X1A10B	W2563C	UCL	30	CCW
FM-X1A10G	V2563C	UC	30	CW
FM-X1A12	V2563C	UC	15	CW
FM-X1A13	LX2563C	UAL	20	CCW
FM-X1A13A	KX2563C	UA	20	CW
FM-X1A19A	KX2563C	UA	20	CW
FM-X1A20	KX2563C	UA	30	CW
FM-X1A20B	KX2563C	UA	20	CW
FM-X1A29	KX2563C	UA	25	CW
FM-X1A29A	V2563C	UC	25	CW
FM-X1A33	KX2563C	UA	20	CW
FM-X1				
FM-X1A36	V2563C	UC	15	CW
FM-X1A37	V2563C	UC	20	CW
FM-X1A37A	W2563C	UCL	10	CCW
FM-X1A38	V2563C	UC	15	CW
FM-X1A39	W2563C	UCL	10	CCW
FM-X1A39A	W2563C	UCL	10	CCW
FM-X1A42	V2563C	UC	35	CW
FM-X1A43	W2563C	UCL	20	CCW
FM-X1A43A	V2563C	UC	25	CW
FM-X1A47	LX2563C	UAL	20	CCW
FM-X1A50	V2563C	UC	12	CW
FM-X1A52A	V2563C	UC	10	CW
FM-X1A52B	V2563C	UC	10	CW
FM-X1A56	LX2563C	UAL	30	CCW
FM-X1A59	KX2563C	UA	25	CW
FM-X1A60	LX2563C	UAL	25	CCW
FM-X1A79	V2563C	UC	20	CW
FM-X1A79B	V2563C	UC	20	CW
FM-X1A81	V2563C	UC	20	CW
FM-X1B2A	BX2563C	UB	17	CW
FM-X1B2B	AX2563C	UBL	15	CCW
FM-X1B2C	YZ2563C	UB	17	CW
FM-X1B2D	DZ2563C	UBL	15	CCW
FM-X1B7	MX2563C	UC	30	CW
FM-X1B7B	MX2563C	UC	30	CW
FM-X1B7C	MX2563C	UC	15	CW
FM-X1B7E	MX2563C	UC	30	CW
FM-X1B7E-1	MX2563C	UC	20	CW
FM-X1B7E-2	MX2563C	UC	30	CW
FM-X1B7F	MX2563C	UC	30	CW
FM-X1B7J	MX2563C	UC	30	CW
FM-X1B7L	MX2563C	UC	30	CW
FM-X1B11	LY2563C	UB	20	CW
FM-X1B11A	LY2563C	UB	20	CW
FM-X1B12	CX2563C	UC	15	CW
FM-X1B13	BX2563C	UB	20	CW
FM-X1B13A	AX2563C	UBL	20	CCW
FM-X1B13B	BX2563C	UB	20	CW
FM-X1B26	PY2563C	UBL	25	CCW
FM-X1B75	Q2563C*	UB	35	CW
FM-X1B78	EY2563C	UC	20	CW
FM-X1B90	SZ2563C	UC	18	CW
FM-X1B93	JZ2563C	UCL	10	CCW
FM-X1B103	AX2563C	UAL	12	CCW
FM-X1B103A	AX2563C	UBL	25	CCW
FM-X2				
FM-X2A6	U2563C‡‡	UAL	35	CCW
FM-X2A6A	U2563C‡‡	UAL	35	CCW
FM-X2A6B	U2563C‡‡	UAL	25	CCW
FM-X2A7	W2563C	UCL	30	CCW
FM-X2A13	T2563C**	UA	25	CW
FM-X2A13A	U2563C‡‡	UAL	25	CCW
FM-X2A16	T2563C**	UA	20	CW
FM-X2A16B	T2563C**	UA	20	CW
FM-X2A16C	U2563C‡‡	UAL	20	CCW
FM-X2A20	T2563C**	UA	20	CW
FM-X2A36	R2563C§	UBL	30	CCW
FM-X2A37	U2563C‡‡	UAL	25	CCW
FM-X2A37A	T2563C**	UA	10	CW
FM-X2A39	U2563C‡‡	UAL	10	CCW
FM-X2A39A	U2563C‡‡	UAL	10	CCW
FM-X2A39B	ZX2563C	UDL	10	CCW
FM-X2A42	T2563C**	UA	35	CW
FM-X2A47	T2563C**	UA	30	CW
FM-X2A47A	U2563C‡‡	UAL	30	CCW
FM-X2A64	T2563C**	UA	20	CW
FM-X2A64A	T2563C**	UA	30	CW
FM-X2A80	HY2563C	UD	30	CW
FM-X2B3	Q2563C*	UB	35	CW
FM-X2B6	R2563C§	UBL	35	CCW
FM-X2B6D	JX2563C	UBL	25	CCW
FM-X2B6E	R2563C	UBL	25	CCW
FM-X2B6F	JX2563C	UBL	25	CCW

See footnotes page 44

Type Magneto	Impulse Coupling	Type	Lag Angle	Rotation
FM-X2				
FM-X2B6G	TW2563C	UB	20	CW
FM-X2B7	MX2563C	UC	30	CW
FM-X2B7A	BW2563C	UB	30	CW
FM-X2B7B	BW2563C	UB	30	CW
FM-X2B13	Q2563C*	UB	20	CW
FM-X2B13A	R2563C§	UBL	20	CCW
FM-X2B14	NX2563C	UB	20	CW
FM-X2B14A	NX2563C	UB	20	CW
FM-X2B14B	CZ2563C	UAL	10	CCW
FM-X2B16	Q2563C*	UB	20	CW
FM-X2B36	R2563C§	UBL	30	CCW
FM-X2B36A	VX2563C	UBL	30	CCW
FM-X4				
FM-X4A2	U2563C‡‡	UAL	25	CCW
FM-X4A3	T2563C**	UA	30	CW
FM-X4A5	T2563C**	UA	40	CW
FM-X4A6	U2563C‡‡	UAL	20	CCW
FM-X4A7	EX2563C	UAL	35	CCW
FM-X4A7A	FX2563C	UA	35	CW
FM-X4A7B	T2563C**	UA	20	CW
FM-X4A8	T2563C**	UA	20	CW
FM-X4A8A	T2563C**	UA	25	CW
FM-X4A8B	T2563C**	UA	14	CW
FM-X4A9	T2563C**	UA	35	CW
FM-X4A10	T2563C**	UAL	30	CCW
FM-X4A10B	U2563C‡‡	UAL	35	CCW
FM-X4A11	T2563C**	UA	35	CW
FM-X4A11A	U2563C‡‡	UAL	35	CCW
FM-X4A11B	U2563C‡‡	UAL	35	CCW
FM-X4A14	T2563C**	UA	15	CW
FM-X4A14A	U2563C‡‡	UAL	15	CCW
FM-X4A14B	T2563C**	UA	20	CW
FM-X4A14D	U2563C‡‡	UAL	20	CCW
FM-X4A16	T2563C**	UA	25	CW
FM-X4A19	T2563C**	UA	25	CW
FM-X4A19B	U2563C‡‡	UAL	20	CCW
FM-X4A19C	T2563C**	UA	20	CW
FM-X4A23	U2563C‡‡	UAL	15	CCW
FM-X4A30B	T2563C**	UA	25	CW
FM-X4A73	KY2563C	UD	30	CW
FM-X4B3	S2563C‡	UB	30	CW
FM-X4B3A	S2563C‡	UB	30	CW
FM-X4B3B	S2563C‡	UB	30	CW
FM-X4B4	S2563C‡	UB	25	CW
FM-X4B4A	Q2563C*	UB	25	CW
FM-X4B5	Q2563C*	UB	40	CW
FM-X4B5A	AY2563C	UB	13	CW
FM-X4B5B	Q2563C*	UB	20	CW
FM-X4B5C	FZ2563C	UBL	15	CCW
FM-X4B6	R2563C§	UBL	35	CCW
FM-X4B7	BW2563C	UB	30	CW
FM-X4B7-1	ZV2563C	UB	20	CW
FM-X4B7A	BW2563C	UB	30	CW
FM-X4B7B	BW2563C	UB	22	CW
FM-X4B7C	BW2563C	UB	30	CW
FM-X4B8	Q2563C*	UB	18	CW
FM-X4B8A	Q2563C*	UB	20	CW
FM-X4B8B	Q2563C*	UB	30	CW
FM-X4B8C	Q2563C*	UB	25	CW
FM-X4B8D	Q2563C*	UB	20	CW
FM-X4B8E	Q2563C*	UB	35	CW
FM-X4B9	Q2563C*	UB	15	CW
FM-X4B9A	HX2563C	UB	25	CW
FM-X4B9B	Q2563C*	UB	15	CW
FM-X4B9C	BY2563C	UB	25	CW
FM-X4B10	S2563C‡	UB	35	CW
FM-X4B10B	R2563C§	UBL	35	CCW
FM-X4B10C	R2563C§	UBL	30	CCW
FM-X4B11	UX2563C	UB	35	CW
FM-X4B11A	VX2563C	UBL	35	CCW
FM-X4B11B	VX2563C	UBL	15	CCW
FM-X4B11C	HX2563C	UB	12	CW
FM-X4				
FM-X4B11D	UX2563C	UB	15	CW
FM-X4B11E	VX2563C	UBL	15	CCW
FM-X4B13	Q2563C*	UB	20	CW
FM-X4B13A	R2563C§	UBL	20	CCW
FM-X4B14	PX2563C	UB	20	CW
FM-X4B14A	PX2563C	UB	30	CW
FM-X4B14C	UZ2563C	UB	20	CW
FM-X4B14D	Q2563C*	UB	20	CW
FM-X4B16	Q2563C*	UB	15	CW
FM-X4B16A	Q2563C*	UB	20	CW
FM-X4B16B	S2563C‡	UB	15	CW
FM-X4B16C	Q2563C*	UB	20	CW
FM-X4B16D	R2563C§	UBL	15	CCW
FM-X4B16E	Q2563C*	UB	20	CW
FM-X4B16F	Q2563C*	UB	20	CW
FM-X4B16G	HZ2563C	UB	15	CW
FM-X4B16K	HZ2563C	UB	20	CW
FM-X4B16R	HZ2563C	UB	15	CW
FM-X4B16S	PW2563C	UB	35	CW
FM-X4B16T	HZ2563C	UB	25	CW
FM-X4B16U	HZ2563C	UB	10	CW
FM-X4B16V	S2563C‡	UB	15	CW
FM-X4B17C	VZ2563C	UB	45	CW
FM-X4B17D	VZ2563C	UB	35	CW
FM-X4B19	R2563C§	UBL	20	CCW
FM-X4B19A	Q2563C*	UB	20	CW
FM-X4B19B	QX2563C	UB	35	CW
FM-X4B19C	Q2563C*	UB	20	CW
FM-X4B23	QX2563C	UB	35	CW
FM-X4B44A	PZ2563C	UB	20	CW
FM-X4B44B	PZ2563C	UB	20	CW
FM-X4B45A	GY2563C	UB	35	CW
FM-X4B64	UX2563C	UB	15	CW
FM-X4B73	S2563C‡	UB	15	CW
FM-X4B74	Q2563C*	UB	20	CW
FM-X4B86	S2563C‡	UB	30	CW
FM-XC1				
FM-XC1B7	MX2563C	UC	30	CW
FM-XC1B7C	MX2563C	UC	15	CW
FM-XC1B7D	EY2563C	UC	25	CW
FM-XCE1				
FM-XCE1B7F	MX2563C	UC	30	CW
FM-XCE1B7G	EY2563C	UC	30	CW
FM-XCE1B7K	MX2563C	UC	30	CW
FM-XCE1B7M	MX2563C	UC	30	CW
FM-XCE1B7P	MX2563C	UC	30	CW
FM-XD1				
FM-XD1B7	MX2563C	UC	30	CW
FM-XD1B7B	MX2563C	UC	30	CW
FM-XD1B7C	MX2563C	UC	15	CW
FM-XD1B7D	EY2563C	UC	25	CW
FM-XD1B7K	MX2563C	UC	30	CW
FM-XD1B7R	UW2563C	UBL	20	CCW
FM-XD1B7R-1	QV2563C	UBL	15	CCW
FM-XD1B7S	LV2563C	UC	13	CW
FM-XD1B7S-1	LV2563C	UC	13	CW
FM-XD1B7S-2	LV2563C	UC	13	CW
FM-XD1B7S-3	LV2563C	UC	13	CW
FM-XD1B7S-4	LV2563C	UC	13	CW
FM-XD1B7T	LV2563C	UC	13	CW
FM-XD1B7U	SV2563C	UC	20	CW
FM-XD1B7U-1	TV2563C	UC	20	CW
FM-XD1B7U-2	LV2563C	UC	20	CW
FM-XD1B7U-3	SV2563C	UC	20	CW
FM-XD1B7U-4	SV2563C	UC	20	CW

See footnotes page 44

Type Magneto	Impulse Coupling	Type	Lag Angle	Rotation
FM-XDE1				
FM-XDE1B7D	EY2563C	UC	25	CW
FM-XDE1B7F	EY2563C	UC	30	CW
FM-XDE1B7G	EY2563C	UC	25	CW
FM-XDE1B7K	EY2563C	UC	30	CW
FM-XDE1B7M	EY2563C	UC	30	CW
FM-XDE1B7P	EY2563C	UC	30	CW
FM-XDE1B7S	LV2563C	UC	13	CW
FM-XDE1B7U	LV2563C	UC	20	CW
FM-XDE2				
FM-XDE2B14	CZ2563C	UAL	10	CCW
FM-XDE2B14A	CZ2563C	UAL	10	CCW
FM-XDE2B71	UW2563C	UB	20	CW
FM-XE1-2				
FM-XE1-2B7	DZ2563C	UB	30	CW
FM-XE1-2B7A	DZ2563C	UB	30	CW
FM-XE1-2B7C	DZ2563C	UB	30	CW
FM-XE1-2B44	DX2563C	UB	20	CW
FM-XE1-2B69	EZ2563C	UBL	15	CCW
FM-XE1				
FM-XE1A7	WY2563C	UCL	30	CCW
FM-XE1A7A	WY2563C	UCL	30	CCW
FM-XE1A7B	WY2563C	UCL	30	CCW
FM-XE1A7C	WY2563C	UCL	30	CCW
FM-XE1A7D	WY2563C	UCL	30	CCW
FM-XE1A7E	WY2563C	UCL	30	CCW
FM-XE1A7F	WY2563C	UCL	30	CCW
FM-XE1B7	EY2563C	UC	30	CW
FM-XE1B7A	EY2563C	UC	30	CW
FM-XE1B7B	EY2563C	UC	30	CW
FM-XE1B7D	EY2563C	UC	30	CW
FM-XE1B7F	EY2563C	UC	30	CW
FM-XE1B7G	EY2563C	UC	30	CW
FM-XE1B7H	EY2563C	UC	30	CW
FM-XE1B7M	MX2563C	UC	30	CW
FM-XE1B7N	EY2563C	UC	30	CW
FM-XE1B93	JZ2563C	UCL	10	CCW
FM-XE2				
FM-XE2B7	EY2563C	UC	30	CW
FM-XE2B7A	EY2563C	UC	30	CW
FM-XE2B7C	LV2563C	UC	13	CW
FM-XE2B7D	LV2563C	UC	20	CW
FM-XE2B30	SW2563C	UB	10	CW
FM-XE4				
FM-XE4A7	WZ2563C	UA	37	CW
FM-XE4A7A	WZ2563C	UA	20	CW
FM-XE4A8	WZ2563C	UA	25	CW
FM-XE4A8A	WZ2563C	UA	20	CW
FM-XE4A8B	WZ2563C	UA	15	CW
FM-XE4A10	WZ2563C	UB	25	CW
FM-XE4A14	WZ2563C	UA	20	CW
FM-XE4A14A	WZ2563C	UA	20	CW
FM-XE4A14B	WZ2563C	UA	20	CW
FM-XE4A14C	WZ2563C	UA	20	CW
FM-XE4A14D	GW2563C	UAL	20	CCW
FM-XE4A14F	WZ2563C	UA	20	CW
FM-XE4A14G	WZ2563C	UA	20	CW
FM-XE4A14H	GW2563C	UAL	20	CCW
FM-XE4A14J	WZ2563C	UA	20	CW
FM-XE4A14K	WZ2563C	UA	20	CW
FM-XE4A14L	WZ2563C	UA	20	CW
FM-XE4A14M	WZ2563C	UA	20	CW
FM-XE4				
FM-XE4A14	WZ2563C	UA	20	CW
FM-XE4A26	WZ2563C	UA	20	CW
FM-XE4A30	WZ2563C	UA	20	CW
FM-XE4A30A	WZ2563C	UA	20	CW
FM-XE4A30B	WZ2563C	UA	25	CW
FM-XE4A44D	WZ2563C	UA	20	CW
FM-XE4A94	MZ2563C	UA	18	CW
FM-XE4A94A	MZ2563C	UA	18	CW
FM-XE4B3	S2563C‡	UB	30	CW
FM-XE4B4	S2563C‡	UB	25	CW
FM-XE4B4A	S2563C‡	UB	25	CW
FM-XE4B5A	SX2563C	UB	20	CW
FM-XE4B7	BW2563C	UB	30	CW
FM-XE4B8	TX2563C	UB	20	CW
FM-XE4B8A	TX2563C	UB	30	CW
FM-XE4B8B	TX2563C	UB	30	CW
FM-XE4B8C	TX2563C	UB	30	CW
FM-XE4B8D	TX2563C	UB	25	CW
FM-XE4B8E	TX2563C	UB	25	CW
FM-XE4B8F	TX2563C	UB	30	CW
FM-XE4B11	RW2563C	UB	35	CW
FM-XE4B11A	SW2563C	UBL	35	CCW
FM-XE4B11B	SW2563C	UBL	15	CCW
FM-XE4B11C	RW2563C	UB	35	CW
FM-XE4B11D	SW2563C	UBL	35	CCW
FM-XE4B11E	SW2563C	UBL	15	CCW
FM-XE4B11F	SW2563C	UBL	8	CCW
FM-XE4B11G	RW2563C	UB	15	CW
FM-XE4B11H	RW2563C	UB	15	CW
FM-XE4B11J	RW2563C	UB	15	CW
FM-XE4B13	S2563C‡‡	UB	20	CW
FM-XE4B14	UZ2563C	UB	20	CW
FM-XE4B14A	S2563C‡	UB	20	CW
FM-XE4B14B	UZ2563C	UB	21	CW
FM-XE4B14C	UZ2563C	UB	21	CW
FM-XE4B14E	UZ2563C	UB	21	CW
FM-XE4B14F	S2563C‡	UB	20	CW
FM-XE4B16	SX2563C	UB	15	CW
FM-XE4B16A	BZ2563C	UB	15	CW
FM-XE4B16B	BZ2563C	UB	15	CW
FM-XE4B16C	BZ2563C	UB	20	CW
FM-XE4B16E	HZ2563C	UB	15	CW
FM-XE4B16F	BZ2563C	UB	20	CW
FM-XE4B16G	S2563C‡	UB	25	CW
FM-XE4B16J	HZ2563C	UB	25	CW
FM-XE4B16M	BZ2563C	UB	20	CW
FM-XE4B16M-1	BZ2563C	UB	20	CW
FM-XE4B16P	S2563C‡	UB	25	CW
FM-XE4B16Q	BZ2563C	UB	20	CW
FM-XE4B16R	BZ2563C	UB	20	CW
FM-XE4B16T	NZ2563C	UB	25	CW
FM-XE4B16V	HZ2563C	UB	25	CW
FM-XE4B16W	BZ2563C	UB	20	CW
FM-XE4B16Y	BZ2563C	UB	15	CW
FM-XE4B17	S2563C‡	UB	45	CW
FM-XE4B17A	RZ2563C	UB	35	CW
FM-XE4B17B	S2563C‡	UB	35	CW
FM-XE4B17C	VZ2563C	UB	45	CW
FM-XE4B17D	VZ2563C	UB	35	CW
FM-XE4B19A	S2563C‡	UB	20	CW
FM-XE4B26	TX2563C	UB	20	CW
FM-XE4B44	S2563C‡	UB	20	CW
FM-XE4B44A	RX2563C	UB	20	CW
FM-XE4B73	S2563C‡	UB	15	CW
FM-XE4B73A	S2563C‡	UB	15	CW
FM-XE4B74	S2563C‡	UB	20	CW
FM-XE4B86	S2563C‡	UB	30	CW
FM-XE4B89	BZ2563C	UB	15	CW
FM-XF2				
FM-XF2A2	LX2563C	UAL	40	CCW
FM-XF2A12	CX2563C	UC	15	CW
FM-XF2A13	TY2563C	UA	25	CW
FM-XF2A19B	TY2563C	UA	20	CW

See footnotes page 44

Type Magneto	Impulse Coupling	Type	Lag Angle	Rotation
FM-XF2				
FM-XF2A19C	LX2563C	UAL	20	CCW
FM-XF2A30	TY2563C	UA	15	CW
FM-XF2A30A	LX2563C	UAL	15	CCW
FM-XF2A30B	TY2563C	UA	15	CW
FM-XF2A36	LX2563C	UAL	20	CW
FM-XF2A39	LX2563C	UAL	10	CCW
FM-XF2B7	GY2563C	UB	30	CW
FM-XF2B12	CX2563C	UC	15	CW
FM-XF2B19	BX2563C	UB	20	CW
FM-XF2B19B	BX2563C	UB	20	CW
FM-XF2B19C	AX2563C	UBL	20	CCW
FM-XF2B36A	ZZ2563C	UB	30	CW
FM-XF2B36C	ZY2563C	UBL	30	CCW
FM-XF2B36D	FW2563C	UB	30	CW
FM-XF2B36F	KW2563C	UB	30	CW
FM-XF2B36H	LW2563C	UBL	30	CCW
FM-XF2B69A	RX2563C	UBL	25	CCW
FM-XF2B86	BX2563C	UB	30	CW
FM-XFE2				
FM-XFE2B7	GZ2563C	UB	30	CW
FM-XFE2B7C-1	ZV2563C	UB	20	CW
FM-XFE2B7A	GZ2563C	UB	30	CW
FM-XFE2B7B	GZ2563C	UB	30	CW
FM-XFE2B7C	GZ2563C	UB	30	CW
FM-XFE2B69	EZ2563C	UBL	25	CCW
FM-XFE2B69A	EZ2563C	UBL	25	CCW
FM-XFE2B69C	EZ2563C	UBL	25	CCW
FM-XFE2B86	MY2563C	UBL	30	CCW
FM-XFE2B86A	MV2563C	UB	30	CW
FM-XFE2B89	GZ2563C	UB	30	CW
FM-XFZ				
FM-XFZ2B102	Q2563C*	UB	25	CW
FM-XFZ2B102A	Q2563C*	UB	25	CW
FM-XO2				
FM-XO2B7	MX2563C	UC	30	CW
FM-XO2B7A	MX2563C	UC	30	CW
FM-XO2B7C	LV2563C	UC	13	CW
FM-XO2B7D	LV2563C	UC	20	CW
FM-XOR4				
FM-XOR4A2	T2563C**	UA	30	CW
FM-XOR4A2A	U2563C‡‡	UAL	30	CCW
FM-XOR4A2C	U2563C‡‡	UAL	30	CCW
FM-XOR4A3	T2563C**	UA	30	CW
FM-XOR4A3A	T2563C**	UA	30	CW
FM-XOR4A4	T2563C**	UA	35	CW
FM-XOR4A4A	U2563C‡‡	UAL	35	CCW
FM-XOR4A4B	T2563C**	UA	35	CW
FM-XOR4A4C	U2563C‡‡	UA	35	CW
FM-XOR4A8	T2563C**	UA	20	CW
FM-XOR4A8C	U2563C‡‡	UAL	20	CCW
FM-XOR4A10	T2563C**	UA	35	CW
FM-XOR4A10A	U2563C‡‡	UAL	35	CCW
FM-XOR4A14	U2563C‡‡	UAL	25	CCW
FM-XOR4A14C	U2563C‡‡	UAL	25	CCW
FM-XOR4A16	T2563C**	UA	45	CW
FM-XOR4A16A	T2563C**	UA	45	CW
FM-XOR4A17	T2563C**	UA	25	CW
FM-XOR4A24A	U2563C‡‡	UAL	35	CCW
FM-XOR4A36	T2563C**	UA	35	CW
FM-XOR4B3	Q2563C*	UBL	30	CCW
FM-XOR4B3A	S2563C‡	UB	30	CW
FM-XOR4B3B	S2563C‡	UB	30	CW
FM-XOR4B3C	R2563C§	UBL	30	CCW
FM-XOR4				
FM-XOR4B3D	S2563C‡	UB	30	CW
FM-XOR4B4	S2563C‡	UB	25	CW
FM-XOR4B4A	Q2563C*	UB	35	CW
FM-XOR4B4B	S2563C‡	UB	25	CW
FM-XOR4B4D	Q2563C*	UB	35	CW
FM-XOR4B8	Q2563C*	UB	30	CW
FM-XOR4B10	Q2563C*	UB	45	CW
FM-XOR4B10A	R2563C§	UBL	35	CCW
FM-XOR4B11	UX2563C	UB	35	CW
FM-XOR4B11A	VX2563C	UBL	35	CCW
FM-XOR4B16	Q2563C*	UB	15	CW
FM-XOR4B16A	Q2563C*	UB	20	CW
FM-XOR4B16B	Q2563C*	UB	15	CW
FM-XOR4B17	W2563C	UB	35	CW
FM-XOR4B19	QX2563C	UB	35	CW
FM-XOR4B23	S2563C‡	UB	40	CW
FM-XOR6				
FM-XOR6A2	U2563C‡‡	UAL	45	CCW
FM-XOR6A2A	U2563C‡‡	UAL	45	CCW
FM-XOR6A3	T2563C**	UA	45	CW
FM-XOR6A3A	T2563C**	UA	45	CW
FM-XOR6A4	T2563C**	UA	35	CW
FM-XOR6A4A	U2563C‡‡	UAL	35	CCW
FM-XOR6A4B	T2563C**	UA	50	CW
FM-XOR6A7	T2563C**	UA	50	CW
FM-XOR6A8	U2563C‡‡	UAL	35	CCW
FM-XOR6A8A	U2563C‡‡	UAL	30	CCW
FM-XOR6A8C	U2563C‡‡	UAL	30	CCW
FM-XOR6A10	U2563C‡‡	UAL	30	CCW
FM-XOR6A14	T2563C**	UA	40	CW
FM-XOR6A14A	U2563C‡‡	UAL	40	CCW
FM-XOR6A14B	T2563C**	UA	40	CW
FM-XOR6A14D	U2563C‡‡	UAL	30	CCW
FM-XOR6A14E	T2563C**	UA	35	CW
FM-XOR6A17	T2563C**	UA	35	CW
FM-XOR6A17B	T2563C**	UA	35	CW
FM-XOR6A24A	U2563C‡‡	UAL	50	CCW
FM-XOR6A24C	U2563C‡‡	UAL	50	CCW
FM-XOR6A26	U2563C‡‡	UAL	50	CCW
FM-XOR6A34A	T2563C**	UA	30	CW
FM-XOR6A40	U2563C‡‡	UAL	25	CCW
FM-XOR6A42A	U2563C‡‡	UAL	42	CCW
FM-XOR6A61A	T2563C**	UA	25	CW
FM-XOR6B3	S2563C‡	UB	45	CW
FM-XOR6B3A	S2563C‡	UB	45	CW
FM-XOR6B4	Q2563C*	UB	35	CW
FM-XOR6B4A	Q2563C*	UB	35	CW
FM-XOR6B4B	Q2563C*	UB	50	CW
FM-XOR6B4C	Q2563C*	UB	50	CW
FM-XOR6B8	VZ2563C	UB	37	CW
FM-XOR6B8A	HW2563C	UB	40	CW
FM-XOR6B8B	DW2563C	UBL	30	CCW
FM-XOR6B8C	WX2563C	UB	30	CW
FM-XOR6B8D	HW2563C	UB	50	CW
FM-XOR6B8E	DW2563C	UBL	50	CCW
FM-XOR6B10	Q2563C*	UB	40	CW
FM-XOR6B10A	R2563C§	UBL	40	CCW
FM-XOR6B10B	R2563C§	UBL	45	CCW
FM-XOR6B10C	R2563C§	UBL	45	CCW
FM-XOR6B14	Q2563C*	UB	40	CW
FM-XOR6B14C	U2563C‡‡	UAL	40	CCW
FM-XOR6B16	WX2563C	UB	30	CW
FM-XOR6B16A	WX2563C	UB	20	CW
FM-XOR6B16B	WX2563C	UB	30	CW
FM-XOR6B16C	WX2563C	UB	20	CW
FM-XOR6B16F	WX2563C	UB	25	CW
FM-XOR6B16H	JW2563C	UB	50	CW
FM-XOR6B16J	S2563C‡	UB	30	CW
FM-XOR6B16L	S2563C‡	UB	20	CW
FM-XOR6B17	MW2563C	UB	52	CW
FM-XOR6B23	BY2563C	UB	45	CW

See footnotes page 44

Type Magneto	Impulse Coupling	Type	Lag Angle	Rotation
FM-XR4				
FM-XR4A3	T2563C**	UA	30	CW
FM-XR4A3A	T2563C**	UA	30	CW
FM-XR4A3B	T2563C**	UA	30	CW
FM-XR4A4	T2563C**	UA	35	CW
FM-XR4A4A	U2563C‡‡	UAL	35	CCW
FM-XR4A8	T2563C**	UA	20	CW
FM-XR4A10	T2563C**	UA	35	CW
FM-XR4A10A	U2563C‡‡	UAL	35	CCW
FM-XR4A14	U2563C‡‡	UAL	25	CCW
FM-XR4A14A	T2563C**	UAL	15	CCW
FM-XR4A17	T2563C**	UA	25	CW
FM-XR4A64	U2563C‡‡	UAL	30	CCW
FM-XR4B3	Q2563C*	UB	30	CW
FM-XR4B3A	S2563C‡	UB	30	CW
FM-XR4B3B	R2563C§	UBL	30	CCW
FM-XR4B4	Q2563C*	UB	35	CW
FM-XR4B4A	S2563C‡	UB	25	CW
FM-XR4B9C	BY2563C	UB	25	CW
FM-XR4B10	R2563C§	UBL	30	CCW
FM-XR4B11	UX2563C	UB	35	CW
FM-XR4B16C	Q2563C*	UB	20	CW
FM-XR4B19	S2563C‡	UB	35	CW
FM-XR6				
FM-XR6A2	T2563C**	UA	30	CW
FM-XR6A2A	U2563C‡‡	UAL	30	CCW
FM-XR6A3	T2563C**	UA	45	CW
FM-XR6A7	T2563C**	UA	50	CW
FM-XR6A8	T2563C**	UA	40	CW
FM-XR6A8A	U2563C‡‡	UAL	40	CCW
FM-XR6A10	T2563C**	UA	35	CW
FM-XR6A10A	U2563C‡‡	UAL	35	CCW
FM-XR6A14	U2563C‡‡	UAL	25	CCW
FM-XR6A14A	U2563C‡‡	UAL	30	CCW
FM-XR6A14B	T2563C**	UA	40	CW
FM-XR6A17	T2563C**	UA	35	CW
FM-XR6A27	U2563C‡‡	UAL	45	CCW
FM-XR6A30	U2563C‡‡	UAL	20	CCW
FM-XR6A41	T2563C**	UA	37	CW
FM-XR6A48A	U2563C‡‡	UAL	25	CCW
FM-XR6A61A	T2563C**	UA	25	CW
FM-XR6A64	U2563C‡‡	UAL	30	CCW
FM-XR6A67	T2563C**	UA	20	CW
FM-XR6B3	S2563C‡	UB	45	CW
FM-XR6B4	Q2563C*	UB	35	CW
FM-XR6B10	Q2563C*	UB	35	CW
FM-XR6B10B	R2563C§	UBL	45	CCW
FM-XR6B10F	R2563C§	UBL	30	CCW
FM-XR6B14	Q2563C*	UB	40	CW
FM-XR6B16	WX2563C	UB	30	CW
FM-XR6B16A	XY2563C	UB	40	CW
FM-XR6B16B	WX2563C	UB	30	CW
FM-XR6B16E	DW2563C	UBL	30	CCW
FM-XR6B16F	NZ2563C	UB	50	CW
FM-XR6B16G	XY2563C	UB	40	CW
FM-XR6B16J	S2563C‡	UB	30	CW
FM-XR6B16K	S2563C‡	UB	40	CW
FM-XR6B16M	S2563C‡	UB	25	CW
FM-XR6B23	BY2563C	UB	45	CW
FM-XR6B44	CW2563C	UB	55	CW
FM-XV4				
FM-XV4B7	GX2563C	UB	30	CW
FM-XV4B7A	GX2563C	UB	30	CW
FM-XV4B7B	GX2563C	UB	30	CW
FM-XV4B7C	GX2563C	UB	30	CW
FM-XV4C				
FM-XV4C8	AW2563C	UDL	12	CCW
FM-XV4C				
FM-XV4C16	QZ2563C	UD	10	CW
FM-XV4C19	AW2563C	UDL	15	CCW
FM-XV4C19A	QZ2563C	UD	15	CW
FM-XV4C19B	AW2563C	UDL	12	CCW
FM-XV4C19C	AW2563C	UDL	12	CCW
FM-XV4C69	QZ2563C	UD	10	CW
FM-XV4C69A	QZ2563C	UD	10	CW
FM-XV4C73	QZ2563C	UD	10	CW
FM-XV4C73A	S2563C‡	UDL	15	CCW
FM-XV4C73B	S2563C‡	UDL	15	CCW
FM-XV4C94A	QZ2563C	UD	20	CW
FM-XV6				
FM-XV6A11	KW2563C	UA	20	CW
FM-XVE2				
FM-XVE2B69	VW2563C	UBL	30	CCW
FM-XVE4B				
FM-XVE4B7	GX2563C	UB	30	CW
FM-XVE4B7A	GX2563C	UB	30	CW
FM-XVE4B7C	GX2563C	UB	30	CW
FM-XVE4B7E	GX2563C	UB	30	CW
FM-XVE4B7F	GX2563C	UB	30	CW
FM-XVE4B7G	GX2563C	UB	30	CW
FM-XVE4B7J	GX2563C	UB	30	CW
FM-XVE4B89	GX2563C	UB	30	CW
FM-XVE4C				
FM-XVE4C19	AW2563C	UDL	15	CCW
FM-XVE4C19A	QZ2563C	UD	15	CW
FM-XVE4C19B	AW2563C	UDL	12	CCW
FM-XVE4C19C	AW2563C	UDL	12	CCW
FM-XVE4C44	AW2563C	UDL	12	CCW
FM-XVE4C69	QZ2563C	UD	10	CW
FM-XVE4C69A	QZ2563C	UD	10	CW
FM-XVE4C73	QZ2563C	UD	10	CW
FM-XVE4C73A	S2563C‡	UDL	15	CCW
FM-XVE4C73B	S2563C‡	UDL	15	CCW
FM-XVE4C94	QZ2563C	UD	20	CW
FM-XVE4C94A	QZ2563C	UD	20	CW
FM-XVE4C100	QZ2563C	UD	12	CW
FM-XY1				
FM-XY1B19	BX2563C	UB	30	CW
FM-XY4				
FM-XY4B16G	HZ2563C	UB	25	CW
FM-XY6				
FM-XY6B16	WX2563C	UB	30	CW
FM-XYE1-2				
FM-XYE1-2B69	EZ2563C	UBL	15	CCW
FM-XYE4				
FM-XYE4A94	MZ2563C	UA	18	CW

See footnotes page 44

IMPULSE COUPLINGS FOR FAIRBANKS-MORSE MAGNETOS

Type Magneto	Impulse Coupling	Type	Lag Angle	Rotation
FM-XYE4				
FM-XYE4A94A	MZ2563C	UA	18	CW
FM-XYE4B8F	VZ2563C	UB	37	CW
FM-XYE4B16H	HZ2563C	UB	25	CW
FM-XYE4B16K	HZ2563C	UB	25	CW
FM-XYE4B16L	HZ2563C	UB	25	CW
FM-XZ4				
FM-XZ4B14C	UZ2563C	UB	21	CW
FM-XZ4B16A	S2563C‡	UB	20	CW
FM-XZ4B16B	KV2563C	UB	15	CW
FM-XZ4B16C	S2563C‡	UB	20	CW
FM-XZ4B16K	HZ2563C	UB	20	CW
FM-XZ4B16R	HZ2563C	UB	15	CW
FM-XZE4				
FM-XZE4A7A	WZ2563C	UA	20	CW
FM-XZE4B7	BW2563C	UB	27	CW
FM-XZE4B7A	BW2563C	UB	30	CW
FM-XZE4B16B	BZ2563C	UB	15	CW
FM-XZE4B16F	BZ2563C	UB	20	CW
FM-XZE4B16F-1	BZ2563C	UB	20	CW
FM-XZE4B16K	HZ2563C	UB	25	CW
FM-XZE4B16S	BZ2563C	UB	15	CW
FM-XZE4B16T	HZ2563C	UB	25	CW
FM-XZE4B16U	BW2563C	UB	35	CW
FM-XZE4B16Z	BZ2563C	UB	15	CW
FM-Z1-2				
FM-Z1-2B7	DZ2563C	UB	30	CW
FM-Z1				
FM-Z1B28	AV2563C	UB	40	CW
FM-Z4A				
FM-Z4A4	T2563C**	UA	35	CW
FM-Z4B				
FM-Z4B4	S2563C‡	UB	35	CW
FM-Z6				
FM-Z6A8D	XW2563C	UA	50	CW
FM-Z6A10	N2563C	UAL	30	CCW
FM-Z6A14	T2563C**	UA	40	CW
FM-Z6A17	T2563C**	UA	35	CW
FM-Z6B8E	DW2563C	UBL	40	CCW
FM-Z6B8F	DW2563C	UBL	45	CCW
FM-Z6B8G	JV2563C	UBL	40	CCW
FM-Z6B16	S2563C‡	UB	30	CW
FM-Z6B16A	S2563C‡	UB	40	CW
FM-Z6B16B	S2563C‡	UB	25	CW
FM-Z6B16C	S2563C‡	UB	20	CW
FM-Z6B16J	KV2563C	UB	30	CW
FM-ZD1				
FM-ZD1B7R	UW2563C	UBL	30	CCW
FM-ZV4				
FM-ZV4B7	GX2563C	UB	30	CW
FM-ZV4B7C	GX2563C	UB	30	CW
FM-ZV4C				
FM-ZV4C44	AW2563C	UDL	12	CCW
FM-ZV4C73	Q2563C*	UD	10	CW
FM-ZV4C73A	NW2563C	UDL	15	CCW
FM-ZV4C73B	NW2563C	UDL	15	CCW
FM-ZVE2				
FM-ZVE2B69	VW2563C	UBL	30	CCW
FM-ZVE4				
FM-ZVE4B7	GX2563C	UB	30	CW
FM-ZVE4B7G	GX2563C	UB	30	CW
FM-ZVE4C				
FM-ZVE4C73	QZ2563C	UD	10	CW
FM-ZVE4C73A	NW2563C	UDL	15	CCW
FM-ZVE4C73B	NW2563C	UDL	15	CCW

* When a Q2563C coupling with 20° - 35° lag is desired, order DV2563C.
§ When a R2563C coupling with 20° - 35° - JD35° lag is desired, order F2563C.
When a R2563C coupling with 20° - 25° - JD25° lag is desired, order FV2563C.
‡ When a S2563C coupling with 25° - 30° lag is desired, order EV2563C.
** When a T2563C coupling with 20° - 35° lag is desired, order hub AY2563.
‡‡ When a U2563C coupling with 20° - 35° - JD35° lag is desired, order hub BY2563.

WHEN ORDERING IMPULSE COUPLINGS AND HUBS, ALWAYS SPECIFY LAG ANGLE

PRINTED IN U.S.A.

379395-115905M-BLP