MAGNETO GROUND SWITCHES AND TERMINALS

The use of primary ground switches or terminals on magneto equipped spark ignition engines is practically universal. Such a practice has resulted in the introduction of many designs of which a few have become standard.

It is our recommendation that the terminal or switch be ordered as a complete group. Arrangements have been made to pack each switch in a separate container.

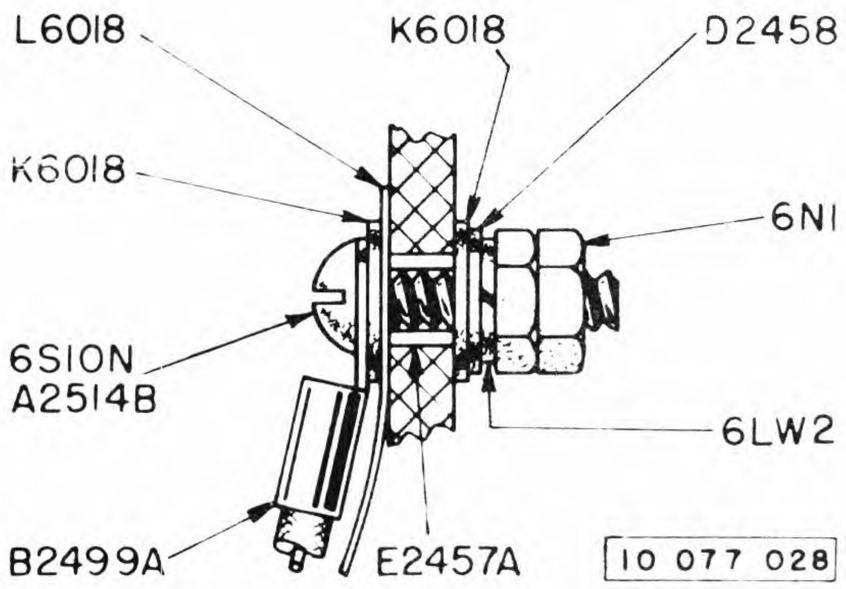

PRIMARY GROUND TERMINAL

Ground Terminal Group - A2514B - Used on FM-J magnetos. Switch is connected by an insulated wire to a control panel away from the magneto. Group consists of (1) E2457A Bushing, (1) D2458 - #6 Washer, (1) B2499A Terminal Wire Assembly, (2) K6018 Insulator Washers, (1) L6018 Terminal Insulator, (1) 6S10N - #6-32 x5/8" Screw, (1) 6LW2 - #6 Lockwasher and (2) 6N1 - #6 Nuts.

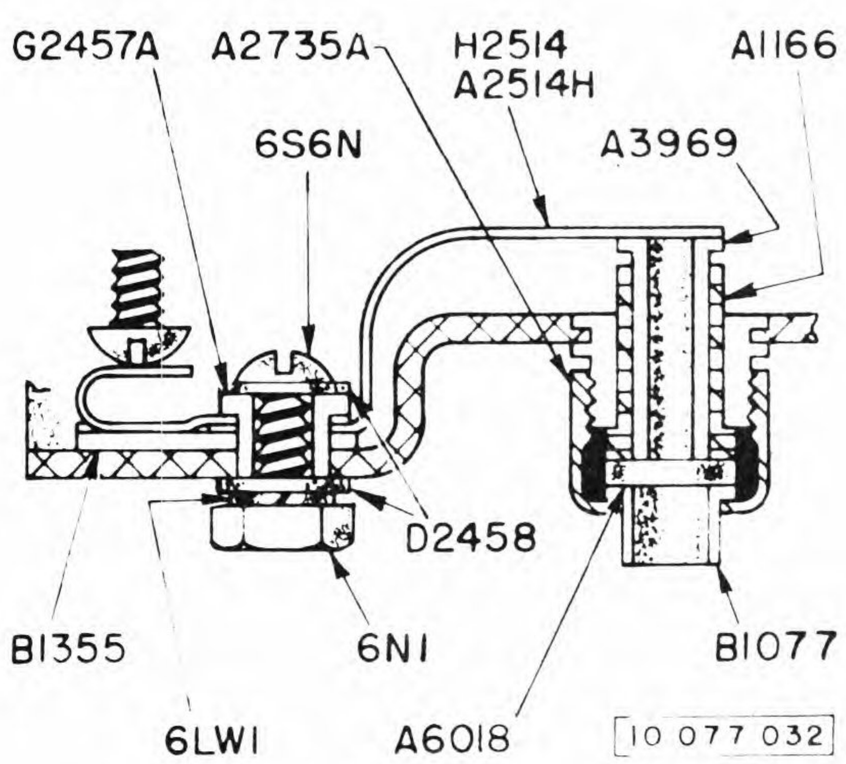

PRIMARY GROUND TERMINAL - RADIO SHIELDED MAGNETOS

Primary Ground Terminal - A2514H - Used on FM-JE4 and FM-JFE2 magnetos where shielding is required. Group consists of (1) B1077 Cable Ferrule, (1) A1166 Terminal Insulator, (1) B1355 Ground Strip Guide, (1) G2457A Bushing, (2) D2458 - #6 Washer, (1) H2514 Ground Strip, (1) A2735A Cable Nut, (1) A3969 Cable Terminal, (1) A6018 Insulator Washer, (1) 6S6N - #6-32x3/8" Screw, (1) #6LW1 - #6 Lockwasher, (1) 6N1 - #6 Nut.

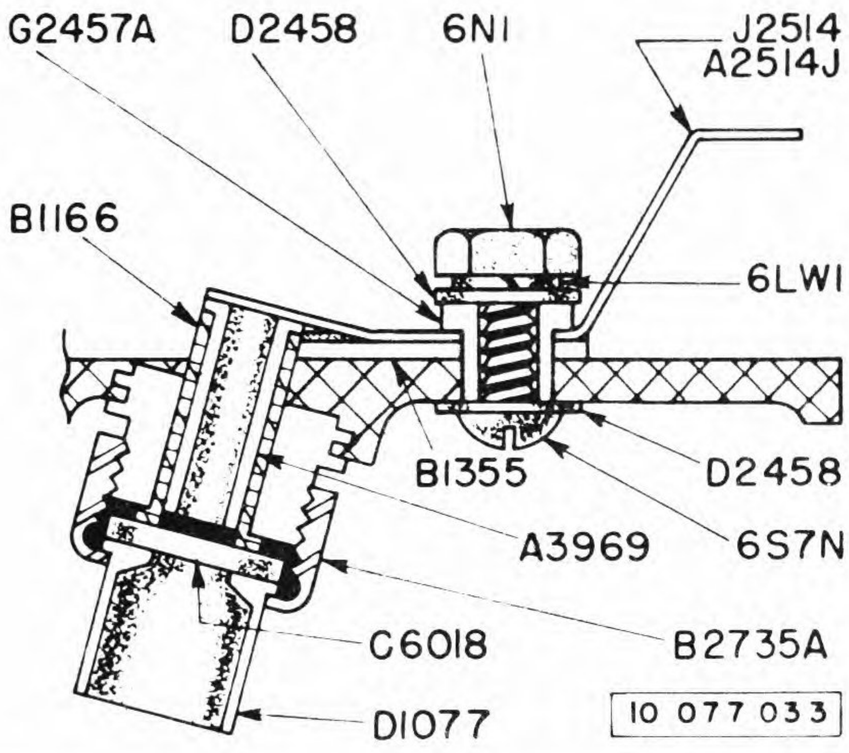

PRIMARY GROUND TERMINAL - RADIO SHIELDED MAGNETOS

Primary Ground Terminal - A2514J - Used on FM-JVE4B7 magnetos where shielding is required. Group consists of (1) D1077 Cable Ferrule, (1) B1166 Terminal Insulator, (1) B1355 Strip Guide, (1) G2457A Bushing, (2) D2458 - #6 Washer, (1) J2514 Ground Strip, (1) B2735A Cable Nut, (1) A3969 Cable Terminal, (1) C6018 Insulator Washer, (1) 6S7N - #6-32x7/16" Screw, (1) 6LW1 - #6 Lockwasher, (1) 6N1 - #6-32 Nut.

PRINTED IN U.S.A.

MEMBER AUTOMOTIVE ELECTRIC ASSOCIATION A.E.A.

Bulletin FM347A
Supersedes 347
July, 1963

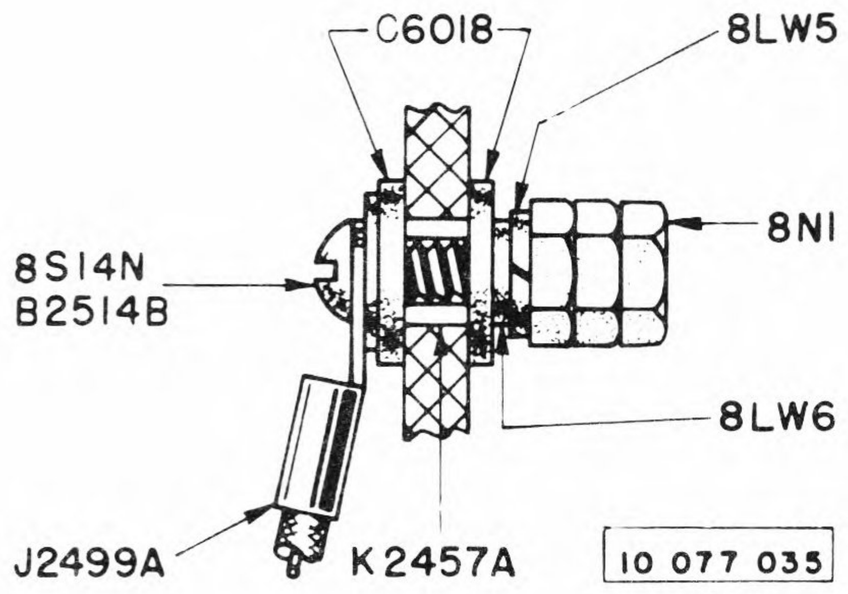

PRIMARY GROUND TERMINAL

Ground Terminal Group - B2514B - Used on FM-XV4B70E magnetos. Group consists of (1) K2457A Bushing, (1) J2499A Terminal Wire Assembly, (2) C6018 Insulator Washer, (1) 8S14N - #8-32x7/8" Screw, (1) 8LW6 - #1208 Lockwasher, (1) 8LW5 - #8 Lockwasher, (3) 8N1 - #8-32 Nut.

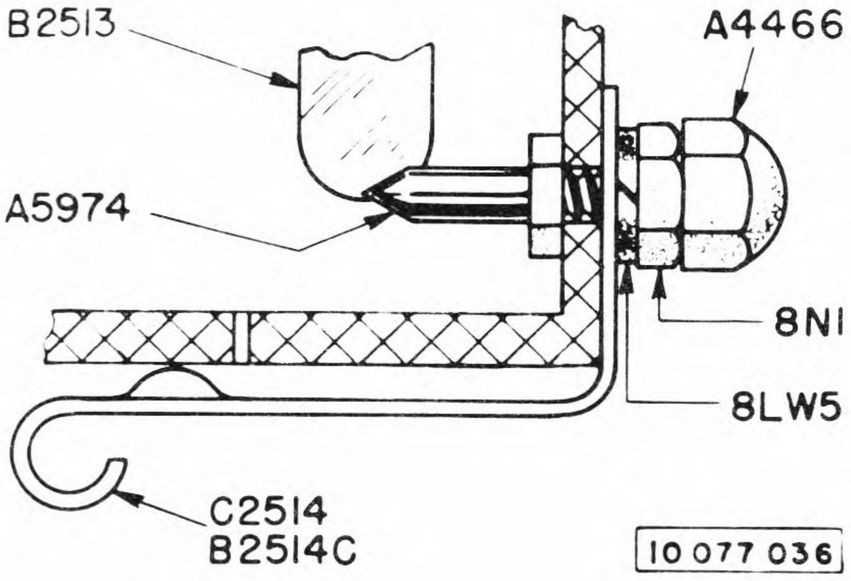

PRIMARY GROUND SWITCH - TYPE

Primary Ground Switch Group - B2514C - Used on FM, FM-K and FM-O magnetos. Group consists of (1) B2513 Contact Spring, (1) C2514 Lever, (1) A4466 Terminal Nut, (1) A5974 Screw, (1) 8LW5 - #8 Lockwasher, (1) 8N1 - #8-32 Nut.

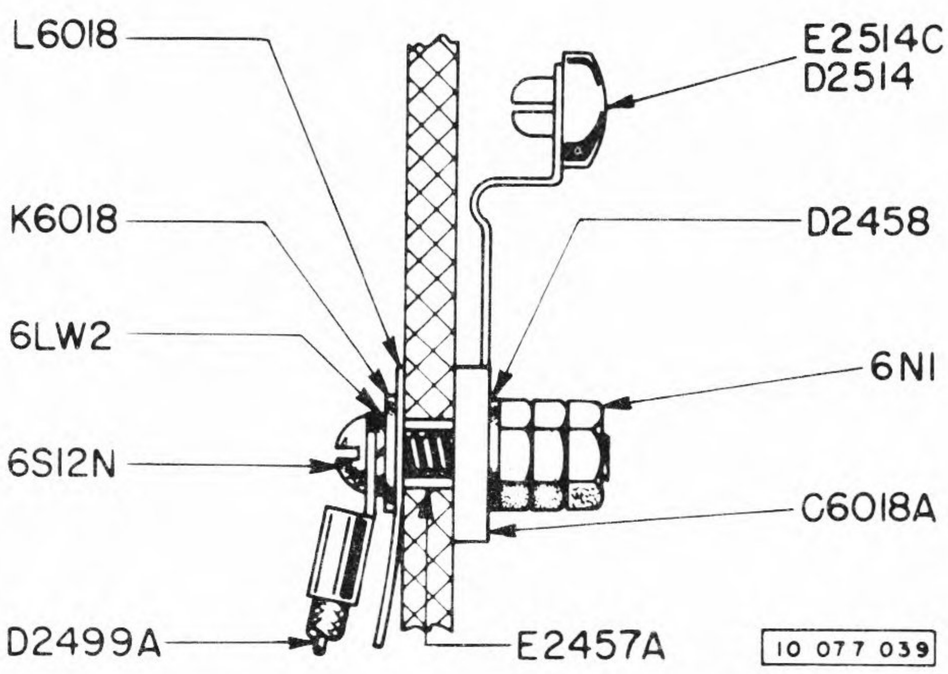

PRIMARY GROUND SWITCH - INSULATED LEVER

Primary Ground Switch Group - E2514C - Used on FM-J4A30B magnetos. Group consists of (1) E2457A Bushing, (1) D2458 - #6 Washer, (1) D2499A Terminal Wire Assembly, (1) D2514 Insulated Lever, (1) K6018 Insulator Washer, (1) L6018 Terminal Insulator, (1) C6018A Insulating Block, (1) 6S12N - #6-32x3/4" Screw, (1) 6LW2 - #6 Lockwasher, (3) 6N1 - #6-32 Nut.

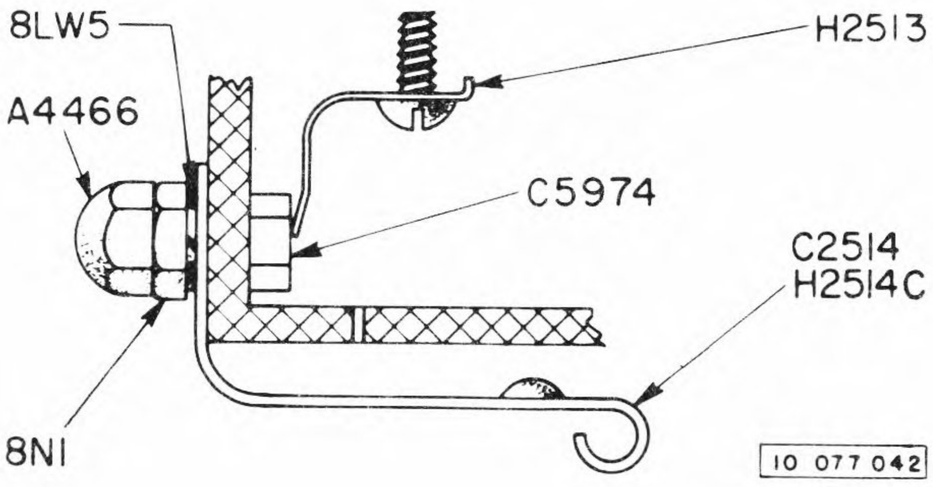

PRIMARY GROUND SWITCH - LEVER TYPE

Primary Ground Switch - H2514C - Used on FM-XR magnetos. Group consists of (1) H2513 Spring, (1) C2514 Lever, (1) A4466 Nut, (1) C5974 Screw, (1) 8LW5 - #8 Lockwasher, (1) 8N1 - #8-32 Nut.

PRIMARY GROUND SWITCH

Primary Ground Switch - K2514C. Used on FM-B2B magnetos. Group consists of complete switch as shown.

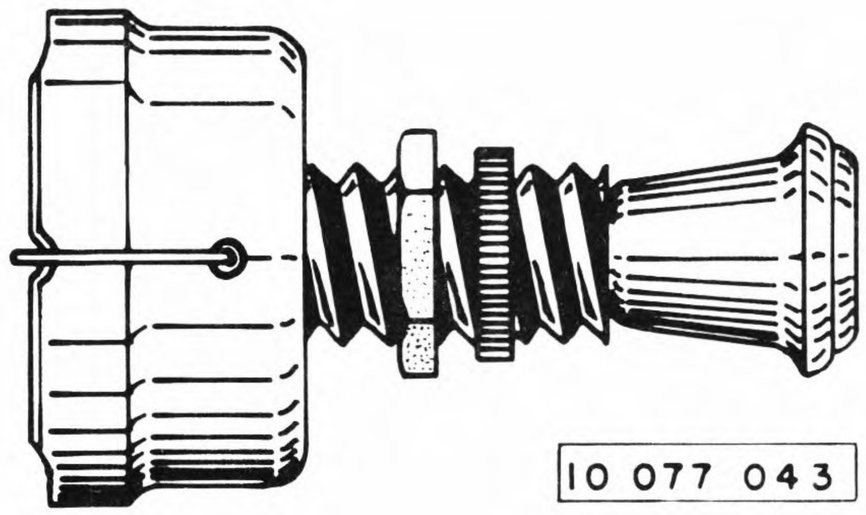

PRIMARY GROUND SWITCH INSULATED LEVER

Primary Ground Switches - L2514C and N2514C. Used on FM-ZV4B7 and FM-XD1B7 magnetos. Group consists of (1) K2457A Bushing, (1) J2499A Terminal Wire Assembly, (1) D2514 Insulated Lever, (2) C6018 Insulator Washer, (1) 8S14N - #8-32x7/8" Screw, (1) 8LW5 - #8 Lockwasher, (3) 8N1 - #8-32 Nut.

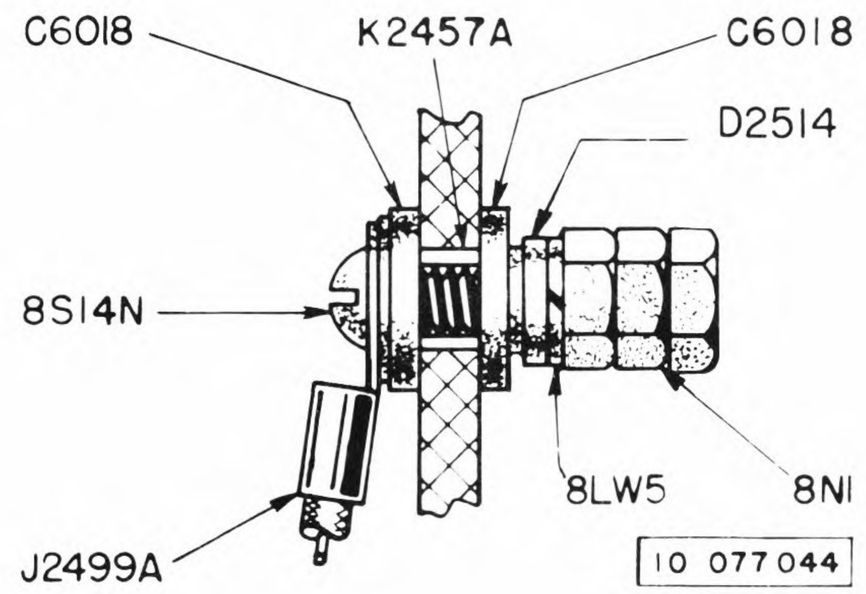

PRIMARY GROUND SWITCH - PUSH BUTTON

Primary Ground Switch - M2514C - Used on FM-ZVE4B7 magnetos. Group consists of (1) V1498 Snap Ring, (1) C2513A Button Spring, (1) A2735A Nut, (1) C4373 Bushing.

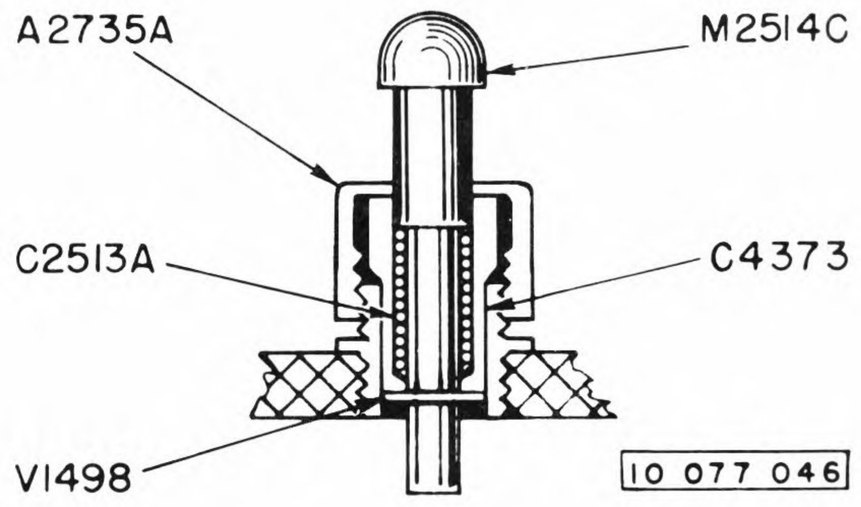

PRIMARY GROUND SWITCH - PUSH BUTTON

Primary Ground Switch - FX2514C - Used on FM-XFE2B7 magnetos. Group consists of (1) V1498 Snap Ring, (1) C2513A Button Spring, (1) S2514 Button, (1) A2735A Nut, (1) C4373 Bushing.

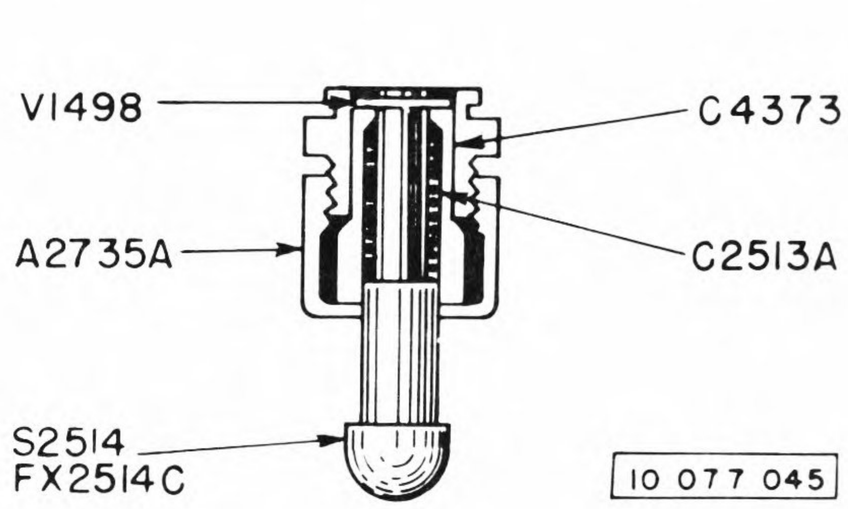

PRIMARY GROUND SWITCH - PUSH BUTTON

Primary Ground Switch - GX2514C - Used on FM-PE1-2B7E and FM-PE1B7A magnetos. Groups consists of (1) V1498 Snap Ring, (1) C2513A Spring, (1) S2514 Button, (1) E4373 Bushing.

