Magneto Fundamentals

Before going into the actual dismantling and servicing of magnetos, it is advisable to have a good understanding of the magnetic and electrical principles involved. By knowing these principles a serviceman is in a position to reason the construction of the various magnetos, will not depend to much on his memory, and oftentimes can figure things out for himself.

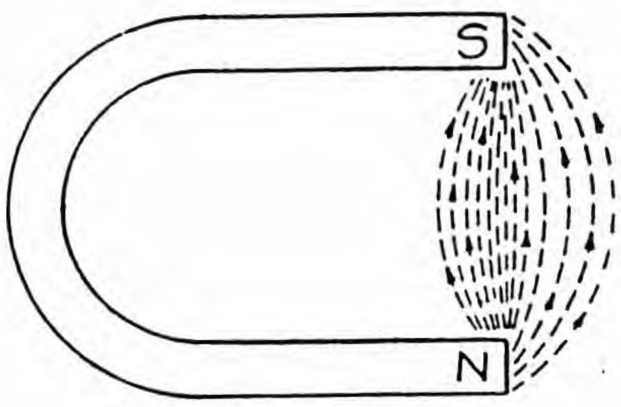

ILLUST. 1--INDICATES THE PATH OF MAGNETIC LINES OF FORCE BETWEEN THE POLES OF AN ORDINARY HORSESHOE MAGNET.

Illust. 1 shows a simple horseshoe magnet, found in the average magneto. This magnet will pick up tacks and nails and will affect the pointer in a compass. The attracting action is caused by a magnetic field in the vicinity of the magnet made up of magnetic lines of force which travel from the north pole at one end of the magnet, through the air to the south pole at the other end. It will be noted that the attractive force is greater nearer the magnet and less the farther away you go.

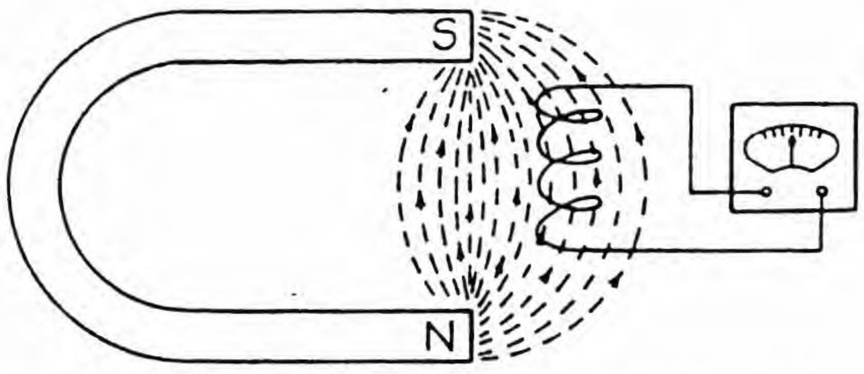

ILLUST. 2--SHOWS A COIL OF WIRE CONNECTED TO A CURRENT METER. COIL IS LOCATED IN MAGNETIC FIELD. MOVEMENT OF COIL IN MAGNETIC FIELD WILL INDICATE A CURRENT THROUGH CURRENT METER.

Illust. 2 shows, in addition to a horseshoe magnet, a coil of wire placed in the magnetic field and connected to a current meter or better known as an ammeter. The ammeter will show a reading if a current passes through the coil. While the coil of wire is stationary in the magnetic field there is no reading on the meter; if the magnet is suddenly jerked away there is a reading on the meter. Now if the magnet is suddenly moved back again there is a reading on the meter, but in the opposite direction. From this it can be concluded that the mere presence of magnetism in the vicinity of a coil produces no current but the change in magnetism does produce a current. The direction of current is determined by the direction of change in magnetism. It will also be noted that if the magnet is moved slowly a very slight reading on the meter results and if moved rapidly a larger reading results. This shows that the speed at which the magnetic field is changed around the coil will directly affect the current induced in the wire.

It has been shown that a current will be generated in the coil if placed in a changing magnetic field; however, this current will not have sufficient voltage to jump a gap in an ordinary spark plug. For this reason a transformer coil is used which steps up the low voltage in the primary coil to a high voltage in the secondary coil. The high voltage current produced in the secondary coil will jump an ordinary spark gap. A condenser is used across the breaker points which acts as a shock absorber and helps produce a sudden break in the primary circuit when the points open.

The condenser also helps prevent excessive burning of the breaker points.

The following section explaining what happens in the F-4 and F-6 magnetos is broken up into two parts. The first part covers the magnetic circuit in the magnetos, and the second covers the electric circuit in the magnetos. Each circuit depends upon the other for successful magneto operation and this relation should be understood after reading the following.

Magnetic Circuit in the International F-4 and F-6 Magnetos

Lines of magnetic force will pass through some substances more readily than through others. When a piece of iron or steel is placed in a magnetic field, the lines of force are bent out of their natural path and pass through the iron. There will be more lines of force passing through the space occupied by the iron than when this space was occupied by air only. This magnetic principle of magnetic lines of force, taking the path of least resistance, is utilized in the F-4 and F-6 magnetos.

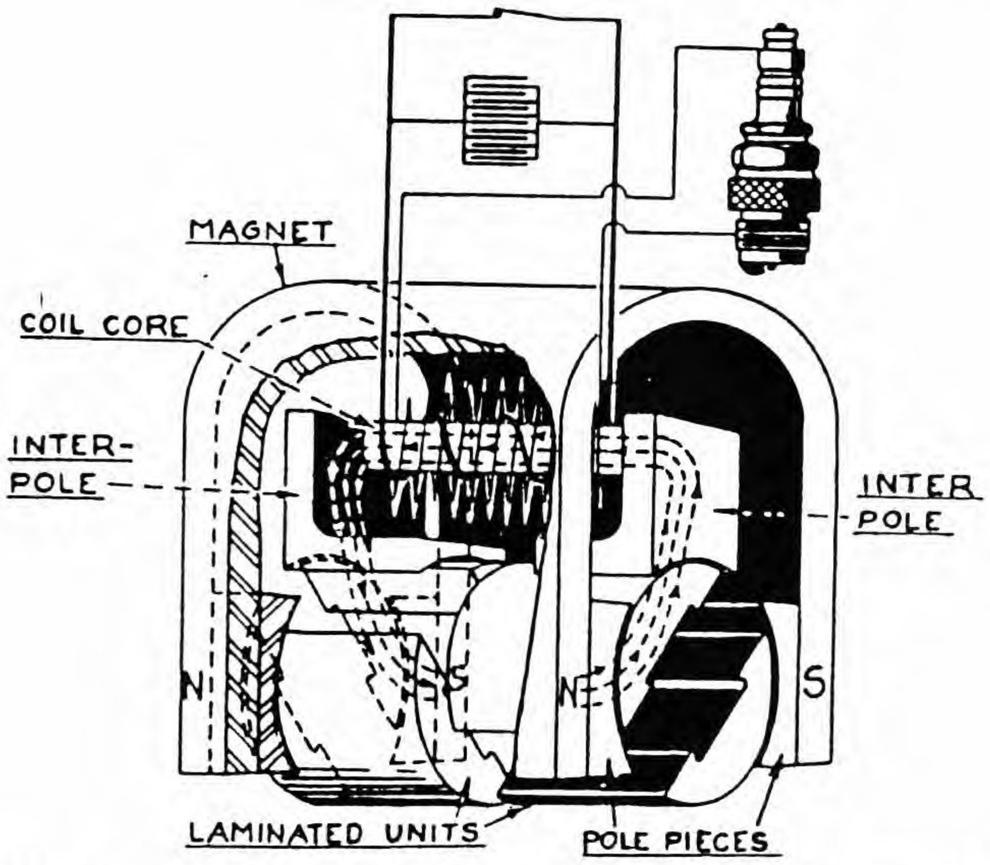

ILLUST. 3--SHOWS PATH OF MAGNETIC LINES OF FORCE THROUGH THE F-4 AND F-6 MAGNETOS.

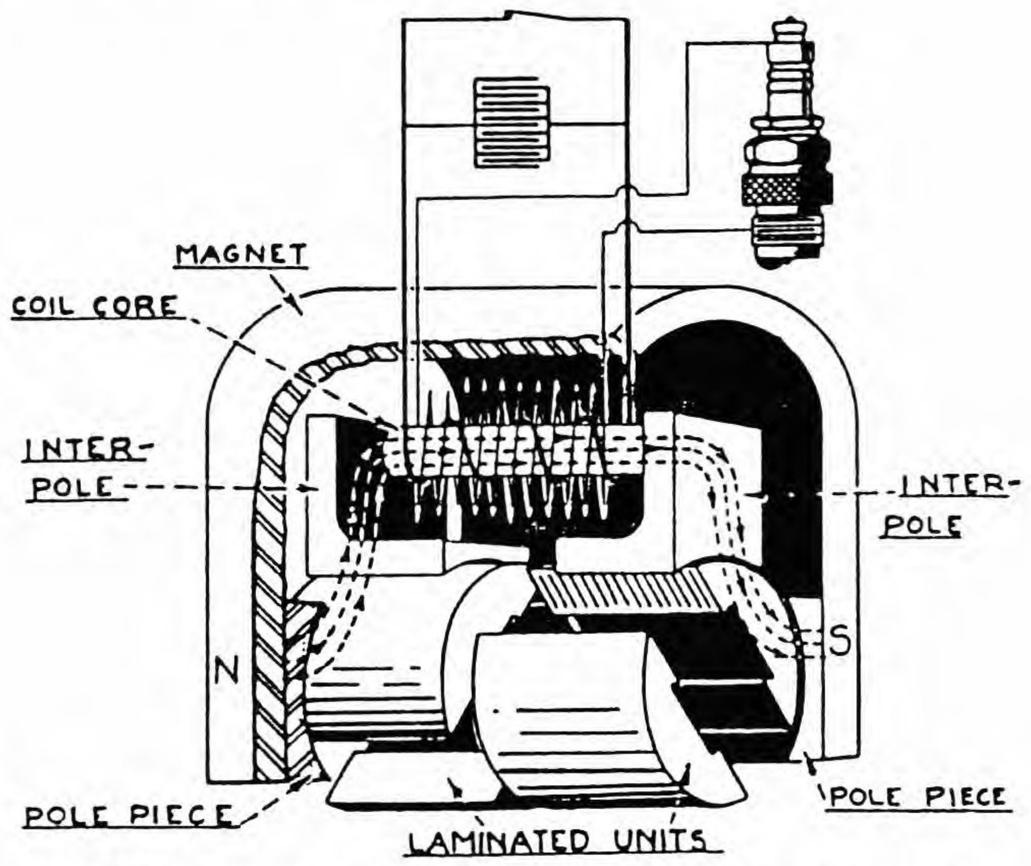

ILLUST. 4--SHOWS PATH OF MAGNETIC LINES OF FORCE THROUGH THE F-4 AND F-6 MAGNETOS WITH ROTOR SET AT 90° FROM THAT SHOWN IN ILLUST. 3.

The magnetic action in the F-4 and F-6 magnetos can best be explained from the diagrammatic views shown in Illusts. 3 and 4. Running over the magneto proper is a permanent horseshoe magnet. This magnet contacts a north pole piece on one side and a south pole piece on the other. (A section of each magnet has been cut out to show more clearly the internal construction of the magneto.) Between these pole pieces turns a rotor with very little clearance for air space. The rotor consists of two pairs of soft steel laminated units. Each pair of units is placed at 90° to the other. Laminated units are mounted in place and magnetically insulated from each other by an aluminum die casting. Through the center of the rotor, also magnetically insulated from the laminated units, is a shaft. (Shaft is not shown in illustrations.)

Directly over each pair of laminated rotor units is a laminated interpole. The two interpoles are connected by a coil core, around which is wound the primary and secondary coils.

From previous explanation it must be remembered that magnetic lines of force will continually flow from the north pole of a magnet to the south pole of a magnet. By means of the soft laminated units in the rotor, the magnetic lines of force are directed from their natural path directly across from pole to pole to a path up through the coil core and down again. The path taken by the magnetic lines of force is shown by the dotted lines and arrows in Illusts. 3 and 4.

As the rotor turns in a clockwise direction (facing the front end), the number of magnetic lines of force passing through the coil core will be reduced, due to the unbalanced position of the rotor laminated units, with respect to the pole pieces and interpoles. This change in number of magnetic lines of force in the coil core induces a current to flow in the primary circuit which is wound around the core; the amount of current depending upon the speed and quantity of magnetic change.

If the rotor continues to turn, the number of lines of force passing through the coil core will drop to zero and then build up again to maximum but will flow in the opposite direction as shown in Illust. 4. The rotor position in Illust. 4. is 90° from the rotor position in Illust. 3, or 1/4 of a complete turn. From this we can see there will be four complete changes in direction of magnetic lines of force in the coil core and direction of current flow in the primary coil for each revolution of the rotor. In the F-6 magneto both directions of current are utilized, whereas in the F-4 magneto only one direction is used.

Electrical Circuit in the International F-4 and F-6 Magnetos

The basic principle of the magneto coil and condenser can best be explained by comparing the action of a coil and condenser with that of a hydraulic booster system, which can be more readily followed by the average person. Illust. 5 shows a diagrammatical drawing of hydraulic booster system above, and a comparative drawing of the F-4 and F-6 magneto electrical circuit below.

The hydraulic booster circuit consists of a centrifugal pump which circulates water around a closed circuit, as indicated by arrows in Illust. 5. A slide valve is provided in tne circuit to stop the flow of water. Between the pump and slide valve branching off the circiut is an air sphere containing a quantity of entrapped air. The entrapped air will occupy a smaller space as the pressure in the water is raised. Also branching off this same circuit between the pump and valve is a piston and cylinder. This piston operates a smaller piston through a connecting rod. The pressure on the larger piston can be stepped up to a higher pressure on the smaller piston by this hydraulic arrangement.

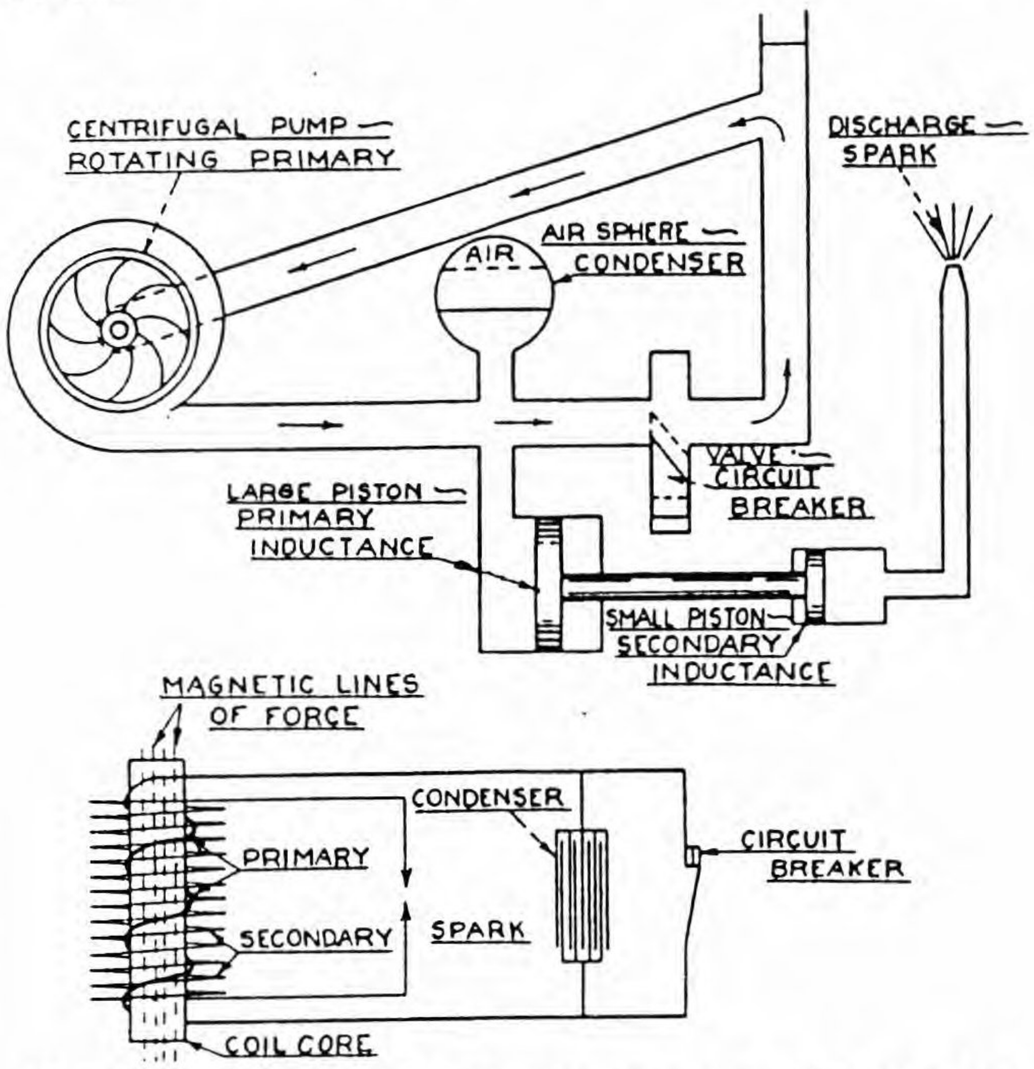

ILLUST. 5--DIAGRAMMATICAL DRAWING OF A HYDRAULIC BOOSTER SYSTEM AND A COMPARATIVE DRAWING OF THE F-4 AND F-6 MAGNETO ELECTRICAL CIRCUIT.

The circulation of water around the system can be compared to the primary circuit in a magneto where changing magnetic lines of force passing through a soft steel coil core, as explained on Pages 5 and 6, induce an electric current to flow through the primary windings. This current passes from the primary out through the circuit breaker and back to the primary.

Suddenly the slide valve in the hydraulic circuit closes, stopping the flow of water. Immediately, the pressure builds up, compressing the trapped air in the air dome and forcing the large and small pistons to the right. The difference in areas of the two pistons steps up the pressure per square inch in the smaller piston chamber sufficiently to force a high pressure discharge at the end of the small pipe.

Referring to the magneto, the circuit breaker suddenly opens, stopping the flow of electric current when it is the greatest. By so doing, the electric current rushes into the condenser and charges it with electrical energy. This energy is discharged back through the primary circuit in the opposite direction immediately after the primary circuit is broken, helping to produce a quick collapse of magnetism in the core. This collapse of magnetic field in the coil core induces a high voltage current in the secondary coil which consists of a great number of turns of fine wire. The high voltage current is sufficient to jump a spark gap. A distributor disc is timed to the rotor and delivers the current to the individual spark plug at just the right moment for proper combustion in the engine. It must be remembered that the magnetic and electrical action in a magneto occurs in an infinitesimally short period of time.

It was mentioned before that the condenser also prevented the circuit breaker points from burning. This can be explained by again referring to the hydraulic system. As the slide valve crosses the path of circulating water, there is a tendency for the water to keep flowing and possibly break off the thin edge at the valve point. This is granted to be a very poor valve, but it is a good hydraulic analog of the best electric valve available. The inertia of the water and the action of the pump tends to keep the current flowing past the valve. Injury would probably result to the valve if it were not for the air dome which receives some of the water and allows the pressure to build up gradually, giving the valve a chance to close and the thicker part to cover the opening before the higher pressures are exerted on it. The pressure stored in the air dome will probably further increase the action of the primary piston immediately after the valve is closed.

When the breaker points in the magneto are separated, there is a tendency for the electric current to keep flowing in an arc across the gap formed. The magnetic core, acting inductively on the primary coil, has a tendency to maintain the arc. The condenser counteracts the combined effort by receiving and storing the electrical energy and thus breaking down the arc quickly. The energy stored in the condenser is discharged back through the primary immediately after the circuit points are separated, thus further increasing the inductive action and the strength of the spark.

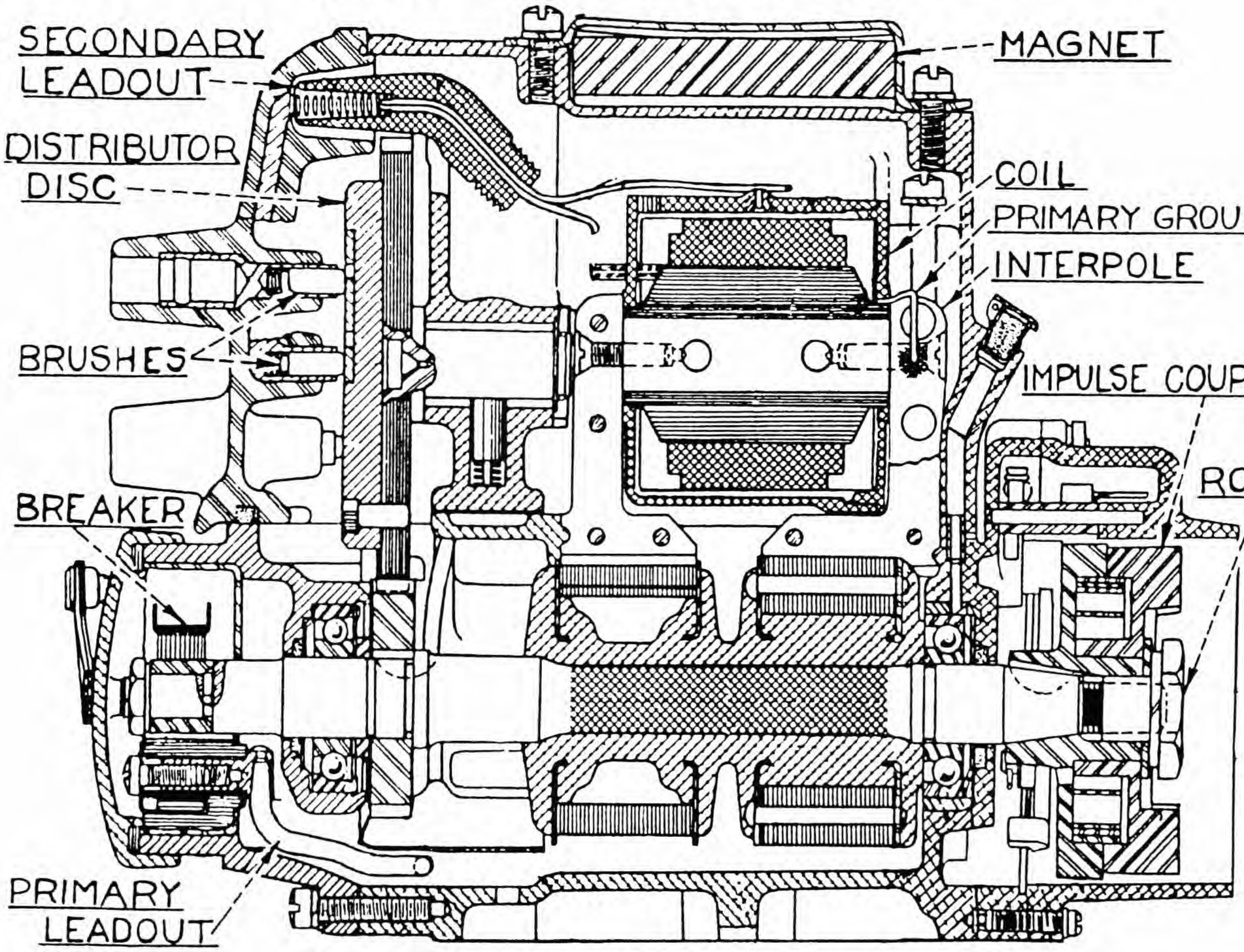

ILLUST. 6--CROSS SECTIONAL VIEW OF INTERNATIONAL F-4 MAGNETO.

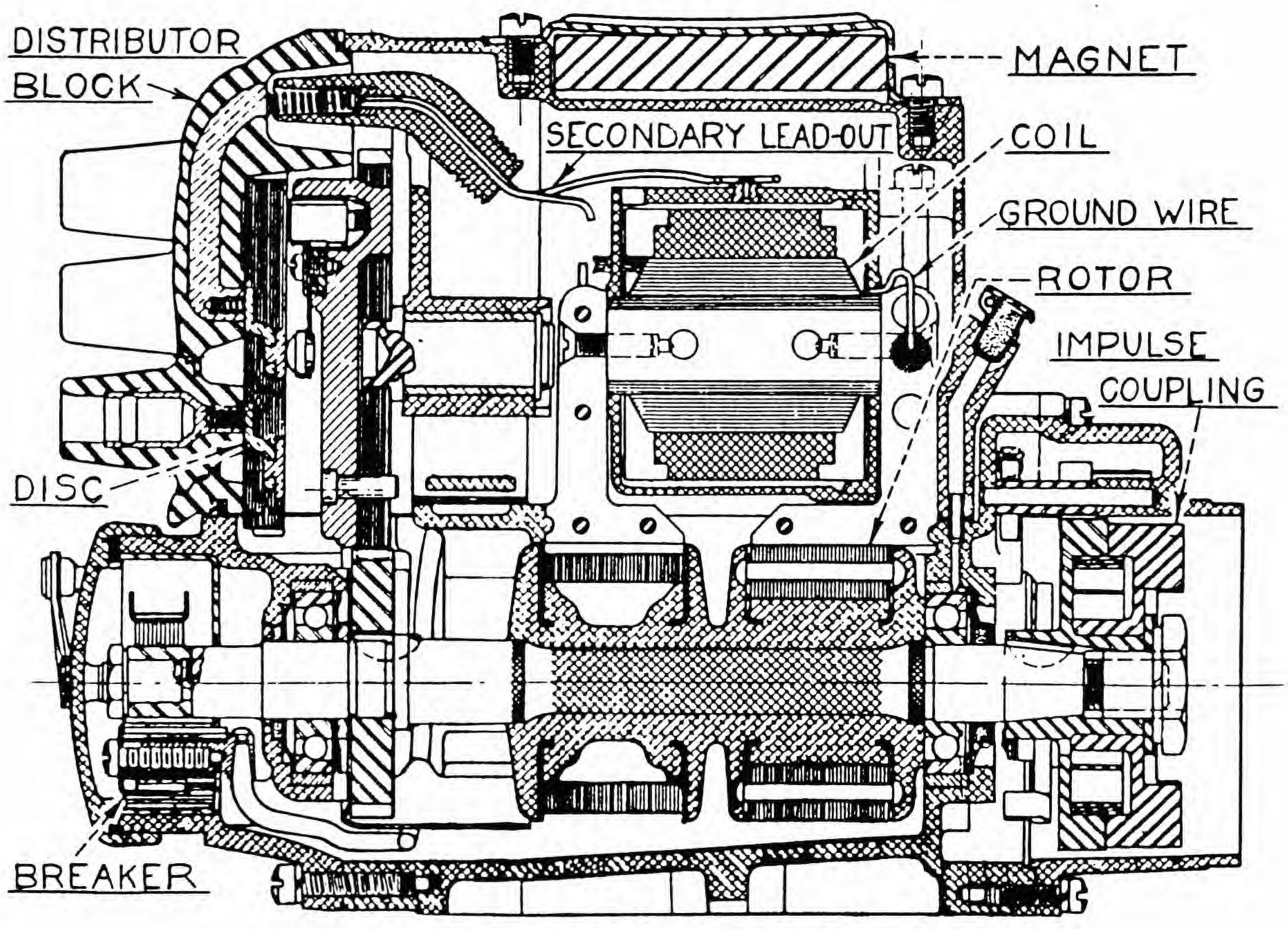

ILLUST. 7--CROSS SECTIONAL VIEW OF INTERNATIONAL F-6 MAGNETO.

INTERNATIONAL F-4 AND F-6 MAGNETOS

F-4 and F-6 Magnetos—General

The F-4 and F-6 magnetos have been designed so as to make possible the convenient replacement of any part in the field. This section of the Manual, covering the F-4 and F-6 magnetos, is divided into two parts. The first covers the recommended dismantling and testing procedure to follow when attempting to locate the cause of faulty operation in an F-4 or F-6 magneto. The remaining part covers adjusting, testing and general information necessary to properly repair a magneto and restore it to its most efficient operating condition.

Preliminary Examination of the Circuit Breaker

Remove the breaker housing cover and examine for correct point performance and setting. A ledge of point metal running up to the side of the companion point causes a slow break and poor performance

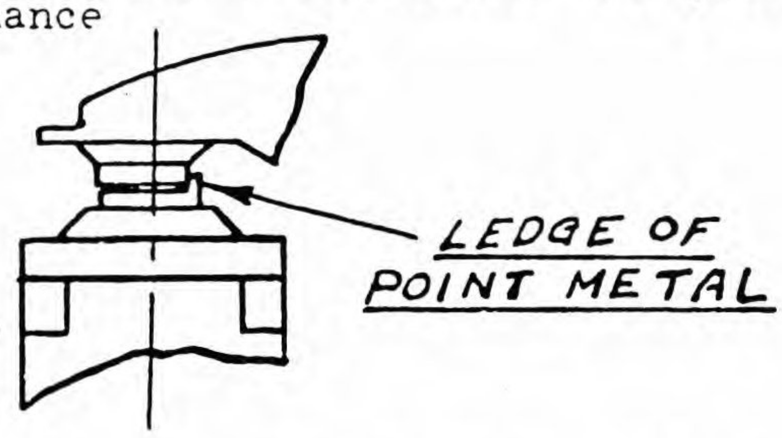

ILLUST. 8--LEDGE OF POINT METAL CAUSES A SLOW BREAK AND POOR PERFORMANCE.

Breaker points on F-4 magneto should be set to .013"; breaker points on F-6 magneto should be set to .020". To adjust point opening, loosen stationary point support screw (2) slightly and use a screw driver as a pry to move stationary point support as necessary. Tighten screw and check adjustment. (Illust. 10).

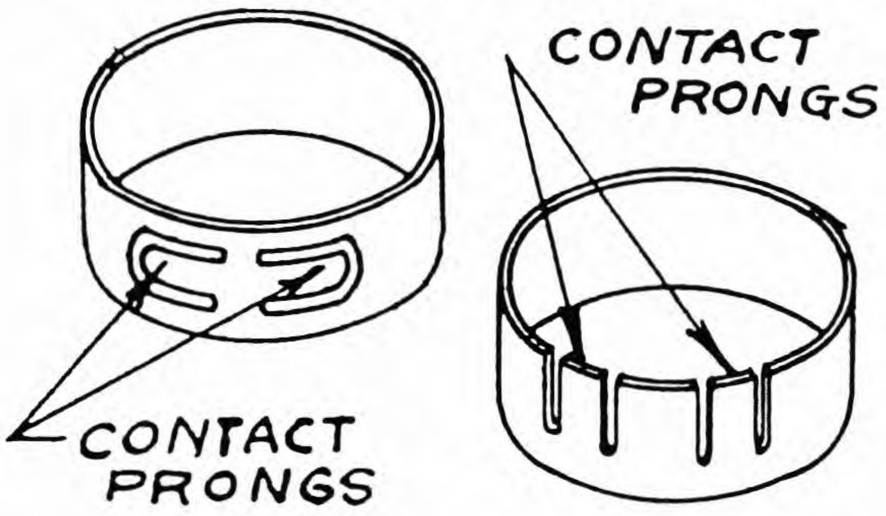

ILLUST. 9--CONTACT PRONGS SHOULD BE BENT TO MAKE A FIRM ELECTRICAL CIRCUIT.

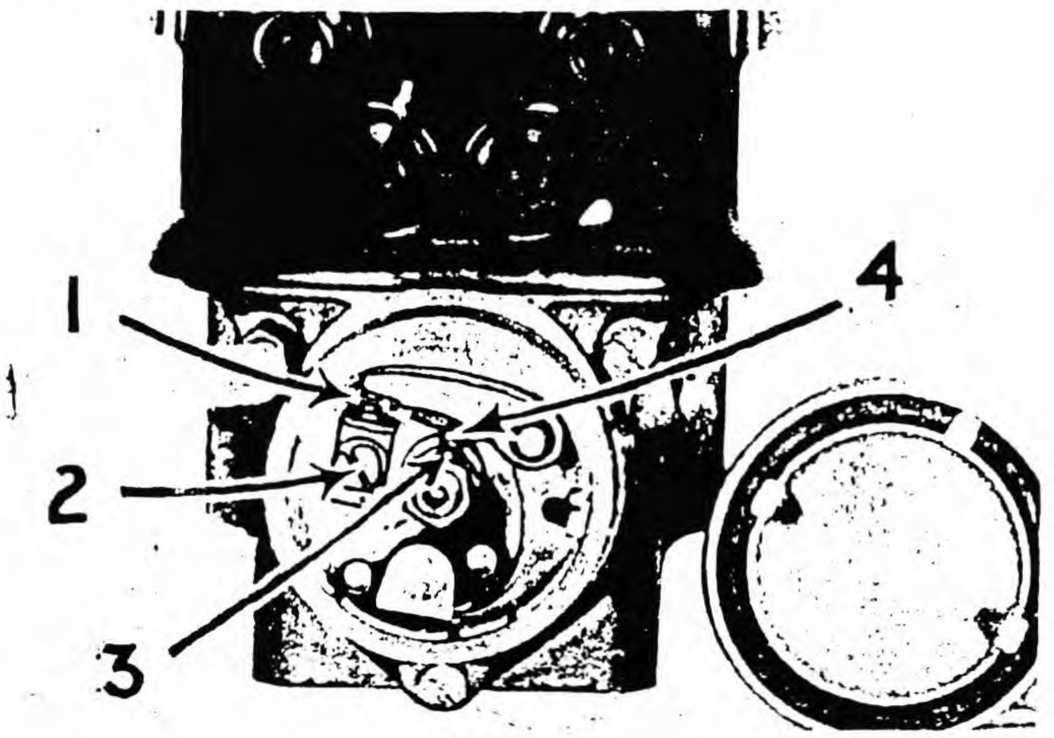

ILLUST. 10
BREAKER ADJUSTMENT.
1--BREAKER POINT OPENING. 2--STATIONARY (ADJUSTABLE) POINT SUPPORT SCREW. 3--BREAKER CAM. 4--BREAKER ARM RUBBING BLOCK ON HIGH RIDGE OF CAM.

Examine the breaker for excess oil around the outside and at the bottom. Occasionally over-oiling is noted. This may interfere with the proper primary circuit from the cup member to the breaker housing. The contact prongs of the breaker cup (Illust. 9) are supposed to be bent out at the factory so as to make a firm electrical circuit between this cup and the housing in which it fits. The oil interferes with this contact. Likewise a loose fitting cup produces the same effect. BEND THE PRONGS OUT, if need be, and reduce the oil supply.

Examination of the Distributor

Remove the distributor block. Examine the brush track for black carbon, burns, and for the spot on the bronze insert that tells whether the spark has been occurring at the correct place. A magneto spark is a rather long drawn-out discharge. It has a tendency to burn the brush track unless the spark is started soon enough to permit a rather complete discharge before the brush runs off of the insert and onto the distributor disc surface. Distributor disc brush track can be readily cleaned of *black carbon with a soft rubber eraser.* Do not use sandpaper.

All sparks from the F-4 magneto are of one polarity. The spot on the distributor disc insert should be as shown in Illust. 11.

A slight blackening of the disc surface at the trailing edge of the insert is normal. The remainder of the brush track on the F-4 disc should be almost completely free of carbon.

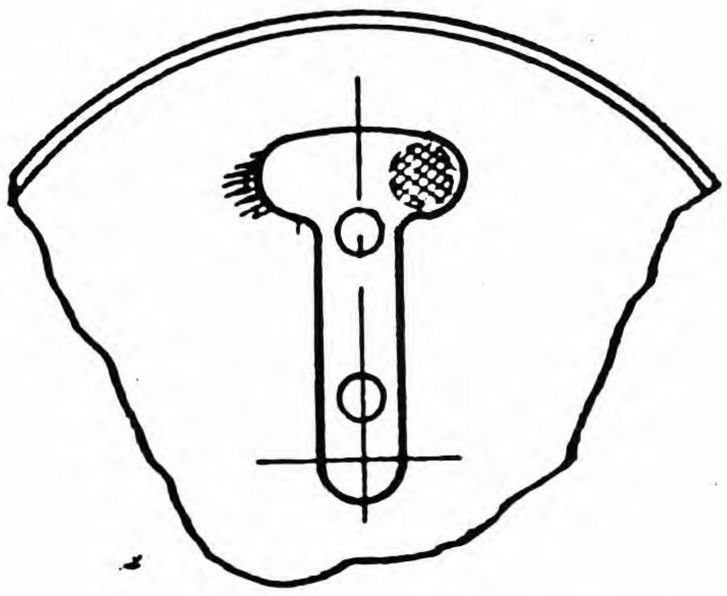

ILLUST. 11--CORRECT TIMING SPOT MARK ON F-4 DISTRIBUTOR DISC.

If the track shows any particular carbon smearing on the F-4 magneto it is advisable to change the brushes. DO NOT USE E4A BRUSHES IN THIS MAGNETO. They will almost always smear and cause "CROSS FIRING." The F-4 brushes have no groove along the side. The latest and most successful F-4 brush (No. 32032-DXA) has a flat spot on the neck which fits into the brush springs.

A late spark spot will cause excess distributor disc burning at trailing edge of insert if operation is continued very long. It results either from incorrect timing of the distributor gears or from running with a retarded spark for long periods of time. The distributor disc will not give its longest service with a late spark.

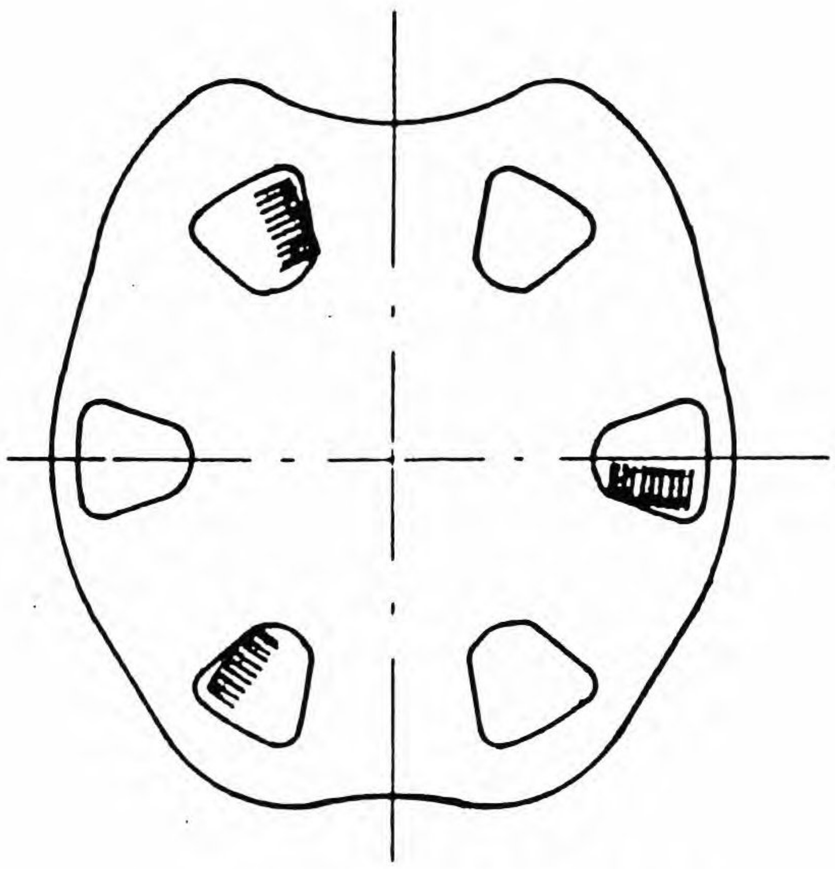

ILLUST. 12--CORRECT TIMING SPOT MARK ON F-6 DISTRIBUTOR DISC.

The sparks of the F-6 magneto are of alternate polarity and, therefore, spots each alternate distributor disc insert the same.

Those men who are familiar with direct current arc welding readily realize that the direction of current flow has an important bearing on the heat generated when an arc is created in the circuit.

In the case of the F-6 magneto the spark spots should always come on the leading edge of the inserts as shown in Illust. 12, otherwise the distributor disc will burn as the brush leaves at the other side.

This matter of distributor timing is especially important in view of the increasing number of F-4 and F-6 magnetos that we are building with special short spark range. When these short range magnetos are correctly applied they, as well as the standard 35° units, all have the distributor spark spot in the same place on the distributor disc insert.

The disc should be almost completely free of smeared carbon on the brush track, although it may show considerable scratching. This scratching is especially characteristic of the brush stamped (X) on the side. This does not matter as long as the brush track is clean and the disc wear is not excessive.

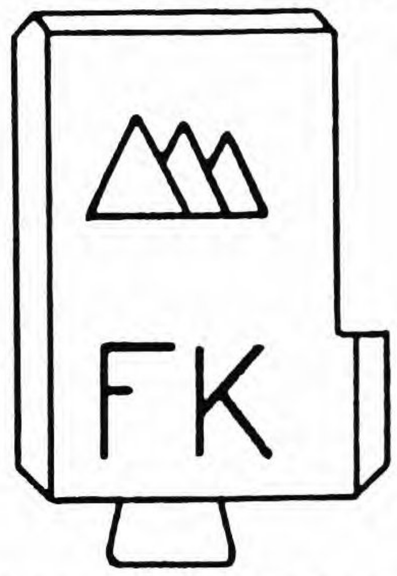

ILLUST. 13 SHOWS IDENTIFICATION MARKINGS ON LATEST TYPE NATIONAL CARBON BRUSH USED IN F-6 MAGNETO.

If the disc shows signs of excessive wear, replace the brush with the new National Carbon "FK" brush (Lettered "FK" on side of brush) which runs relatively clean and is less aggressive than the older brush.

The fitting of brushes to magnetos is one of the most delicate and unpredictable operations that the factory has to perform. Occasionally a brush under factory operation will operate cleanly and otherwise satisfactorily and, under different conditions in the field, start smearing. This is almost impossible to avoid in all cases, but should be of infrequent occurrence.

Safety Gap

If the breaker and distributor of the subject magneto are both found to be in good condition, carry the examination further. Leave the distributor block off, advance the spark, disengage the impulse coupling (see page 25), then turn the magneto briskly by hand. A spark should jump regularly across the safety gap. This test cannot be made on the F-6 magneto unless the safety gap is reduced to the same setting as in the F-4 magneto.

Examination for Safety Gap Sparking

We will assume that the spark is still unsatisfactory, intermittent, and weak. The examination must then proceed still further. Remove the magnet and frame cover. Check the condenser; better put in a new one, if it is available, and test the magneto for spark once more. Test condenser as explained on Page 16.

The frame cover may be left off for this test; however, it is necessary to replace magnet on magneto. The spark should jump the safety gap with the breaker in advance position, with the rotor being turned briskly by hand. If performance is now satisfactory, the condenser was at fault. Reset the F-6 magneto safety gap; see Page 16 for correct setting.

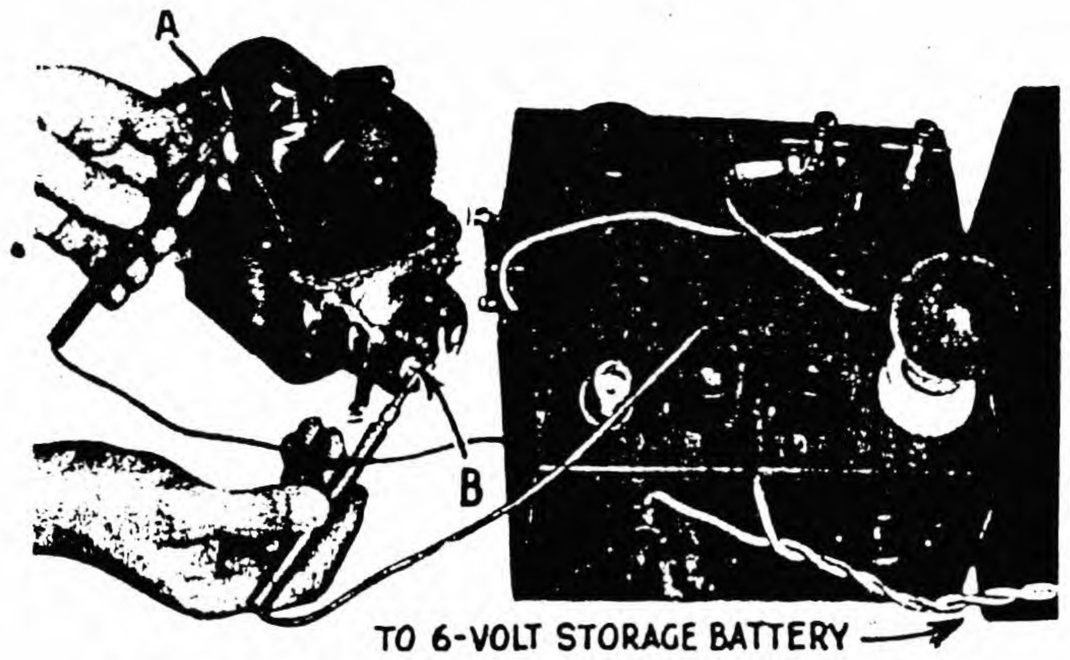

ILLUST. 14--TESTING PRIMARY LEAD-OUT WIRE FOR OPEN CIRCUIT OR FOR GROUNDING.

Assuming that the condenser exchange did not correct faulty operation, it will be in order to check the primary lead-out wire for open circuit and for grounding. This is done by using the 6-volt line on electrical test set as shown in above illustration. Disconnect primary lead-out wire terminal "A" from condenser and turn rotor until breaker points are open. If primary lead-out wire shows a closed circuit from terminal "A" to terminal "B", and an open circuit from either terminal to any grounded surface, then the fault lies either in the magneto winding or its installation.

Examination of the Ground Connection

Examine the ground connection of the winding to the interpole (Illust. 15), Item "A"). This wire should be securely

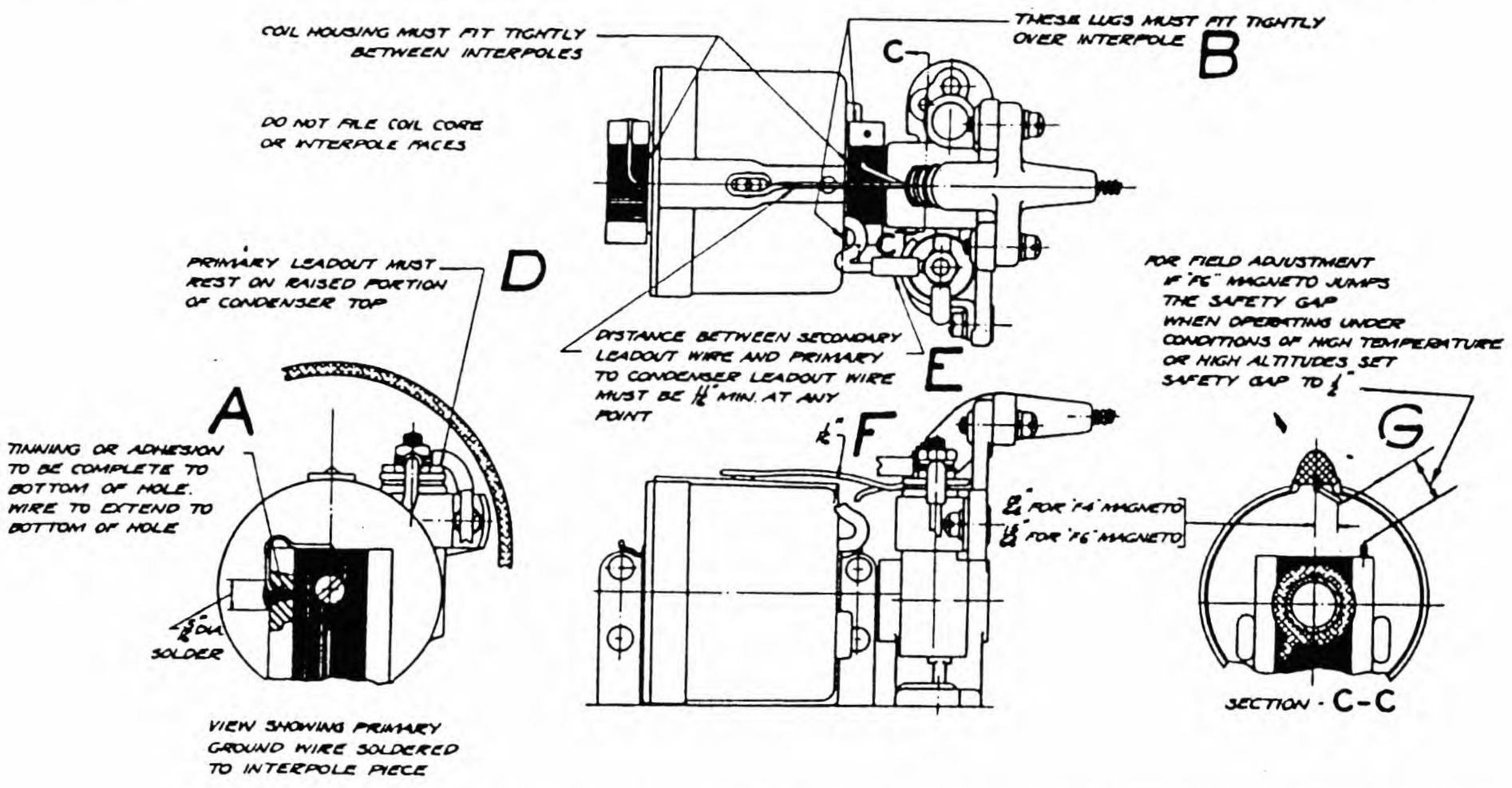

ILLUST. 15--DRAWING OF MAGNETO COIL ASSEMBLED IN PLACE ON F-4 AND F-6 MAGNETOS WITH SERVICING POINTERS FOR INSTALLING COIL PROPERLY. (REFER TO ILLUST. 22, PAGE 14 FOR LATEST CONSTRUCTION OF ITEM A).

soldered into the countersunk hole in the interpole. Laying the ground wire along the interpole and making a surface joint is not secure enough. The solder will crack through in time. See that this is not the case in the subject magneto. See Illust. 93 for new type.

The coil housing should be a *tight press fit* between the interpoles endwise, so that it cannot shift and wear loose from engine vibration. If this happens, the ground connection, or the wire to the condenser, will crack in two. A very slight amount of motion will bring this about. Now see that this fault does not exist in the magneto being examined.

The spark is still unsatisfactory we will assume. It will then be necessary to replace the coil. It must be faulty because everything else has been gradually eliminated as the source of trouble. However, an additional check for faulty coil can be made (as given below) before removing coil from magneto.

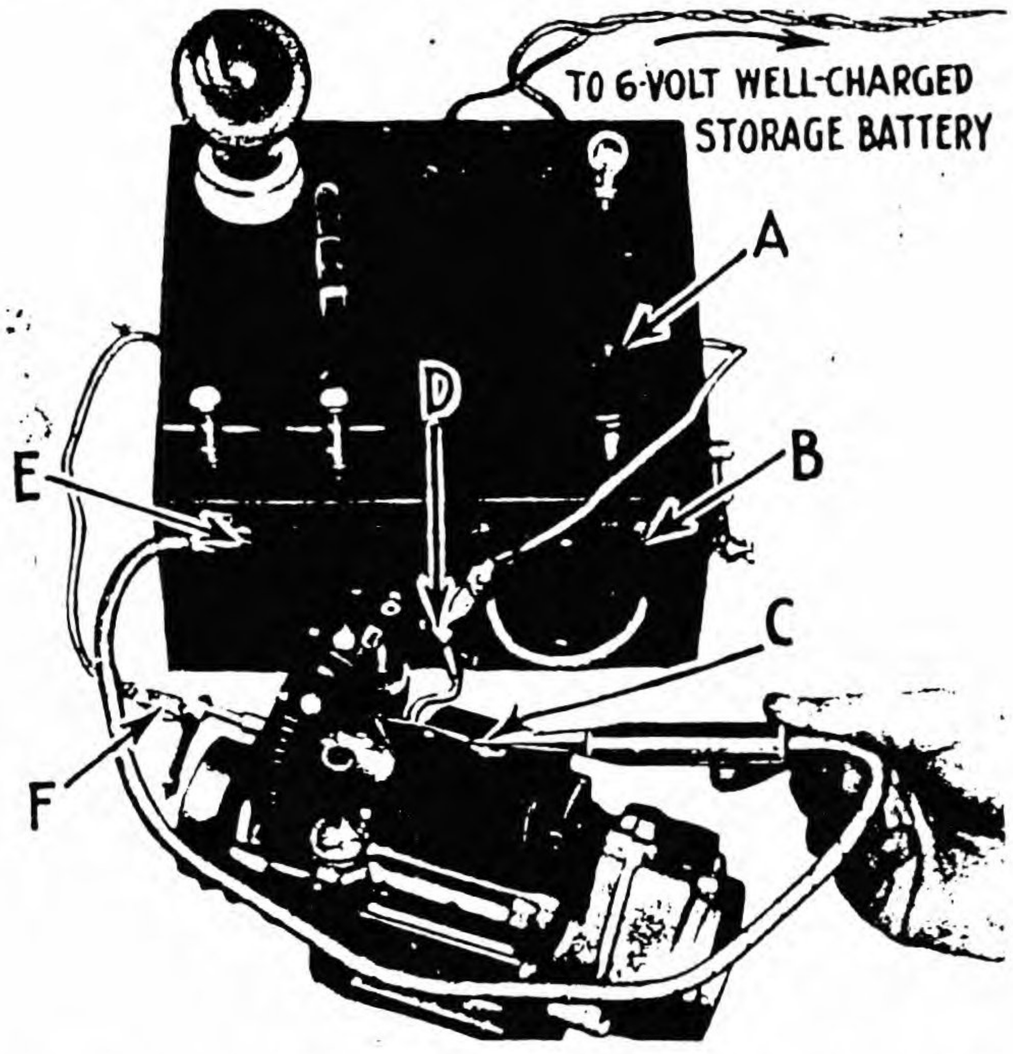

ILLUST. 16--TESTING MAGNETO COIL WHILE IT IS STILL IN PLACE ON THE MAGNETO, USING THE ELECTRICAL TEST SET.

As a final check for faulty coil, the coil may be tested while still on the magneto by connecting the electrical test set as shown. Have vibrator switch "A" in "off" position, and high tension switch connected to "armature terminal" "B." Connect high tension test point lead to "high tension terminal" "E". Turn magneto rotor until breaker points are separated and remove primary wire terminal from condenser post. Snap winding test lead clip "D" on terminal primary wire to condenser and test lead clip "F" on any grounded part of magneto. Hold high tension test point "C" on secondary lead-out wire. Snap on vibrator switch and a strong spark should jump a 5/16" test gap.

In this case the method of testing the coil while it is still on the magneto is being shown for the information it will give. The coil on the test magneto has already been proven faulty by previous checks. The coil should now be removed from the magneto and replaced with a new one.

Removing Coil From Magneto

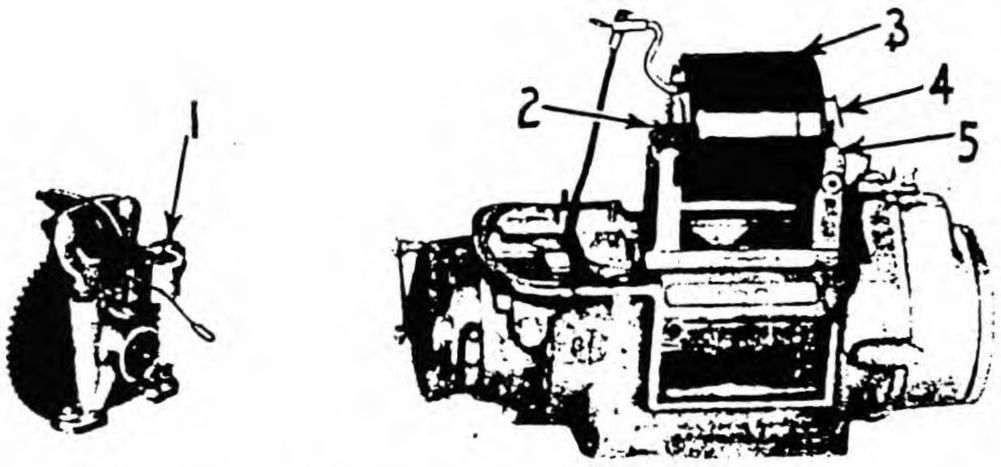

ILLUST. 17--COIL REMOVED FROM MAGNETO.
1--DISTRIBUTOR GEAR AND BEARING. 2--COIL CORE SCREW.
3--COIL. 4--COIL GROUND WIRE. 5--INTERPOLE.

Disconnect the condenser. Then remove the distributor gear and bearing. Next, remove the coil core screws. Unsolder the coil ground wire from the interpole. Use a large soldering copper, quite hot so it can be done quickly. Pour out all extra solder from the countersunk hole. Finally force the coil upward slowly with the aid of a screw driver.

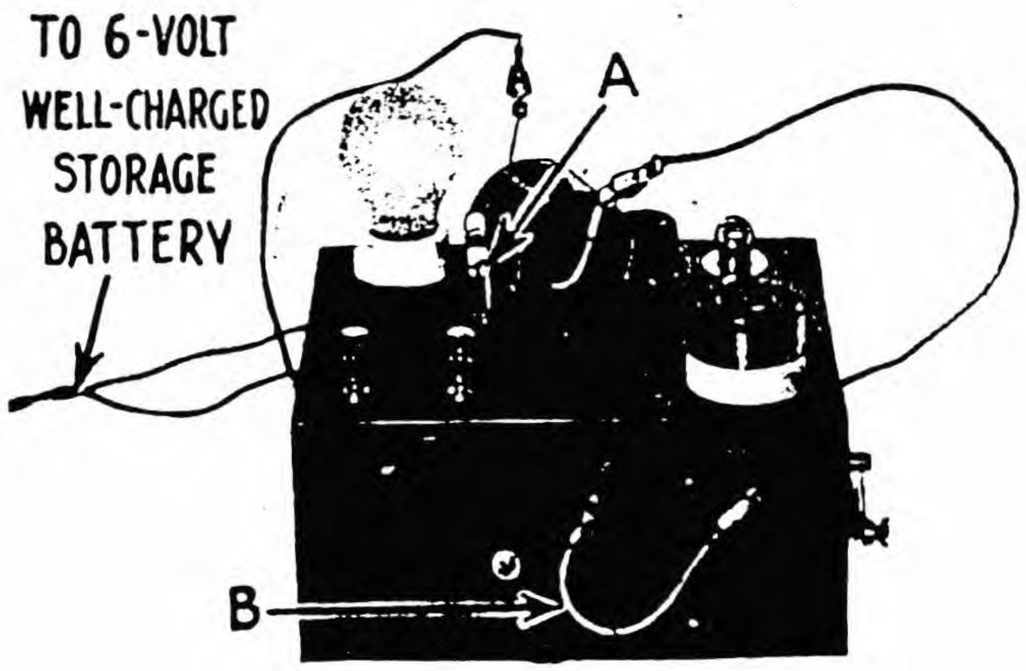

ILLUST. 18--TESTING COIL WITH COIL CORE IN PLACE WITH ELECTRICAL TEST SET.

The core should always be in position in the center of the windings when testing the coil on the electrical testing

instrument. If the core is not in place, the transformer set-up of the coil is not complete and no spark will appear at the gap. This test should not be prelonged any more than is necessary to obtain the check. Subjecting the coil to the test conditions for a prolonged period may damage it.

Have vibrator switch "off" and high tension switch "B" connected to "Armature" terminal. Place coil on test box so brass secondary lead-out terminal is firmly against metal of collector ring holder. (See "A", Illust. 18.) Clip winding test leads to primary lead-out wires which extend from each end of coil housing. Snap on vibrator switch. There should be a strong spark across a 5/16" test gap.

Removing Coil Core



ILLUST. 19--REMOVING COIL CORE WITH HARD WOOD OR FIBER PUNCH.

Next, remove the coil core from the defective winding. Hold the coil in the hand, preferably with the coil lid up. By the use of a flat-end hardwood or fiber punch, at least 5/8 to 11/16" in diameter, drive the core downward between the fingers. Be sure to hold coil firmly when driving out core. Bakelite coil case is brittle and will break if dropped.

Never use a metal punch of any kind.

Examination for Coil Core Fit Between Interpoles

The least defect on the joining surfaces between the coil core and interpole will permanently impair the magneto's operation.

This joint must be a clean "sucking" fit, similar to the fit when two Johannsen gauge blocks are put together. They stick just by virtue of their flatness after being properly "wrung" together. No rust, no oil or foreign matter of any kind must be on these surfaces. By all means do not try to correct defects by filing the ends of the coil core. This can only end in failure.

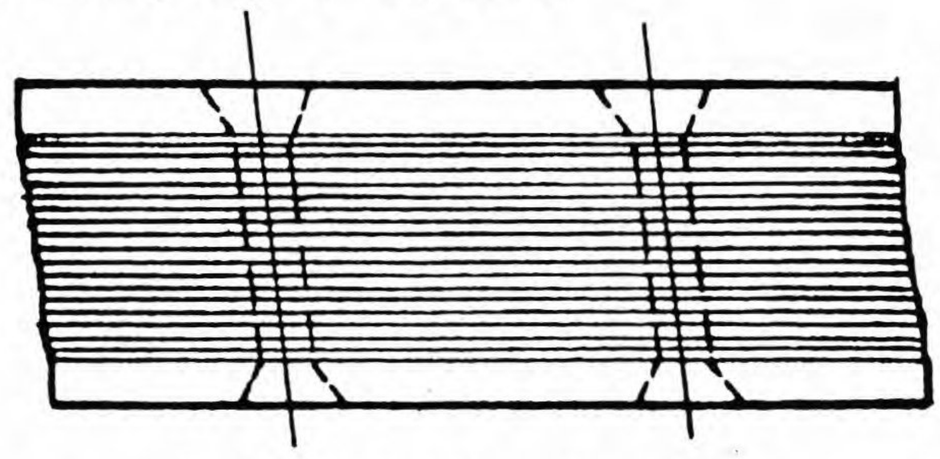

ILLUST. 20--DRAWING SHOWS COIL CORE KNOCKED OUT OF SQUARE.

The coil core is made of laminated electrical sheet steel. It is held together by two rivets. If struck vigorously with a metal tool it will burr and may be knocked out of line as shown in exaggerated form in illustration.

Identifying the F-4 and F-6 Magneto Coils

Select a new coil to replace the defective one. Sometimes it is an advantage to know when the coil was made.

This can be done as follows: The year and month when the coil was made is indicated either on the paper lable or stamped on the side of the coil case. Following the date is the letter A, B, C or D, which indicates the improvements made in their construction, the D coils being the latest construction and are immersed in water for 12 hours at the factory before they are accepted for production. A black asphalt material is used to seal this coil in the housing instead of Halowax. This improves the water resistance of the coil. D coils are called "Tropical Coils."

Assembling the F-4 and F-6 Magneto Coils

The coil must be a light fit between the interpoles and on the coil core. Otherwise vibration will loosen it and cause failure.

Also, *do not attempt* to file the diameter of the coil core so that it will slip into the winding easily, nor file the ends to make it fit between the interpoles easier. Paint the coil hole generously all around with a thick as-

phalt solution for a 3/8" length at each end before pressing in the core. The core should be a hard pressed fit in the winding and it may have to clear a path by removing a small amount of varnish as it is pressed in; this is permissible and will cause no damage, provided it is started and pressed in straight. Clean the core ends thoroughly of paint. These surfaces must be absolutely clean. The core should be a light press fit between the interpoles. The bakelite housing will normally be a little longer than the coil core and should not be filed.

The guide lugs on the coil housing should fit the interpole so that they bear against it lightly, just enough to keep the winding from moving sideways or turning around on the screws. A check should be made on the length of the coil core screws. They should be bottomed lightly in the core and the winding placed on top of the interpoles with the screws in place. (See Illust. 17.) In this position it can be readily seen whether the screws bottom before they would tighten or not. If the guide lugs are too tight on the interpole, they may be filed until they fit properly. Be careful not to touch the end of the core with the file during this operation.

Test coil core mounting screw length by bottoming screws lightly in coil core and pressing assembly into the position shown.

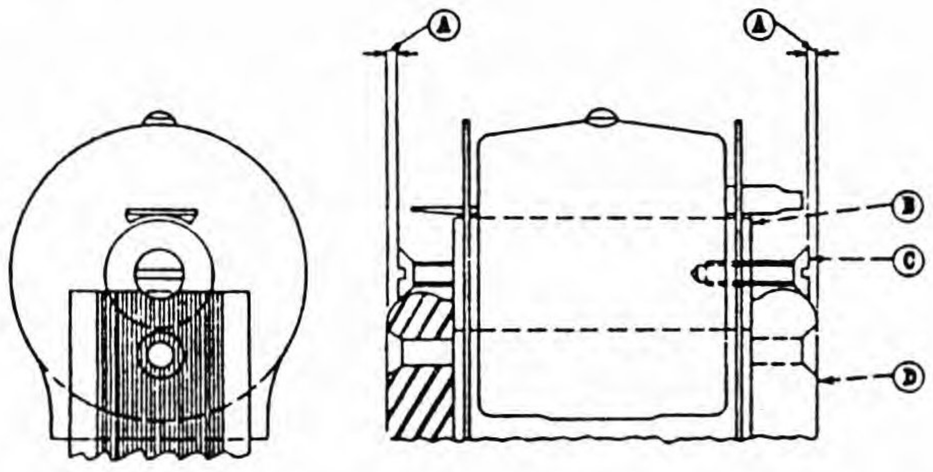

ILLUST. 21--TESTING COIL CORE SCREWS BEFORE ASSEMBLING COIL AND CORE TO MAGNETO. A. 1/32" MINIMUM. B. COIL CORE. C. COIL CORE MOUNTING SCREW. D. POLE PIECE.

If either screw head does not fall back of the face of pole piece by 1/32" minimum shown, it must be removed and enough cut off the end to meet this requirement. This is done so that when coil core is in place, the screws will tighten up in pole piece countersink before screws bottom in coil core.

Caution: Do not file or in any way deface ends of coil core or face of pole pieces as this will impair the magnetic circuit and efficiency of the magneto. The coil core should be a light press fit between the pole pieces.

The Ground Connection

This connection must be bent and inserted into the bottom of the hole as shown on Page 11, Illust. 15, Item "A", to prevent the wire breaking from vibration. Be sure that the countersunk hole and the end of the lead-out wire is clean and that a thorough soldering job is done. Do not use acid; use a resinous flux. A resinous flux will not corrode or eat the metal.

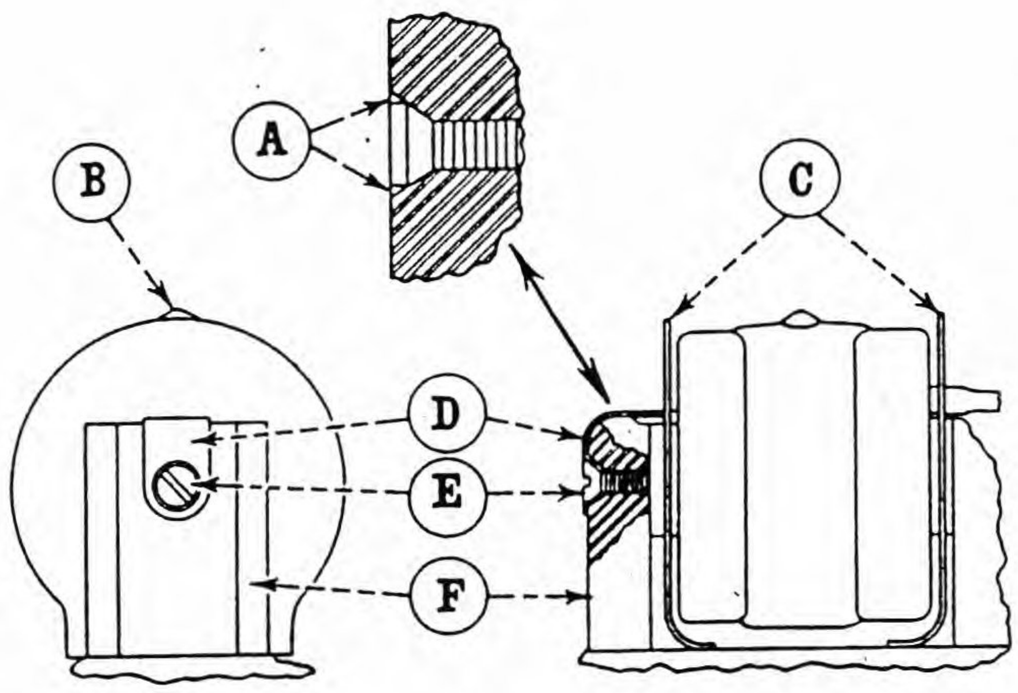

ILLUST. 22--METHOD OF GROUNDING COIL WITH NEW GROUND STRIP A. IF COUNTERSUNK HOLE IN POLE PIECE HAS A SHOULDER, REMOVE IT BEFORE ASSEMBLING COIL GROUNDING STRIP UNDER COIL MOUNTING SCREW, OTHERWISE COIL GROUNDING STRIP WILL NOT MAKE A GOOD CONTACT. B. HIGH TENSION TERMINAL. C. COIL INSULATORS. D. COIL GROUNDING STRIP. E. SCREW. F. COUPLING END OF POLE PIECE.

Remove the old coil from coil core and assemble new coil on core with a coil end insulator at each end. Locate coil and core in magneto so high tension terminal is on a vertical center line as shown.

Assemble coil grounding strip under coil mounting screw in pole piece as shown. Tighten screw firmly. Surface of countersink in pole piece and grounding strip must be clean and bright before assembling.

If there is a shoulder in countersink hole in pole piece, the shoulder must be removed.

The High Tension Lead-Out

Do not allow this lead-out to touch the bakelite coil housing at any point. Maintain 1/16" between the secondary lead-out and the coil housing. (See Page 11, Illust. 15, Item "F".) This is to prevent a drop of moisture from bridging at this place. If this wire is raised too high the spark will jump upward to the roof of the aluminum cover.

The Condenser

All metal surfaces contacting the condenser should be thoroughly cleaned to insure a good ground. See that condenser is pushed down as far as it will go before tightening the clamp. Refer to Page 11, Illust. 15, Items "E" and "D" for instructions on the proper positioning of the lead wires to condenser terminal screw. It is very important that these wires be positioned as shown in the illustration to prevent "shorting" or "grounding." Condenser as furnished for replacement does not include condenser nut (10-32) which must be obtained separately.

Testing Condenser

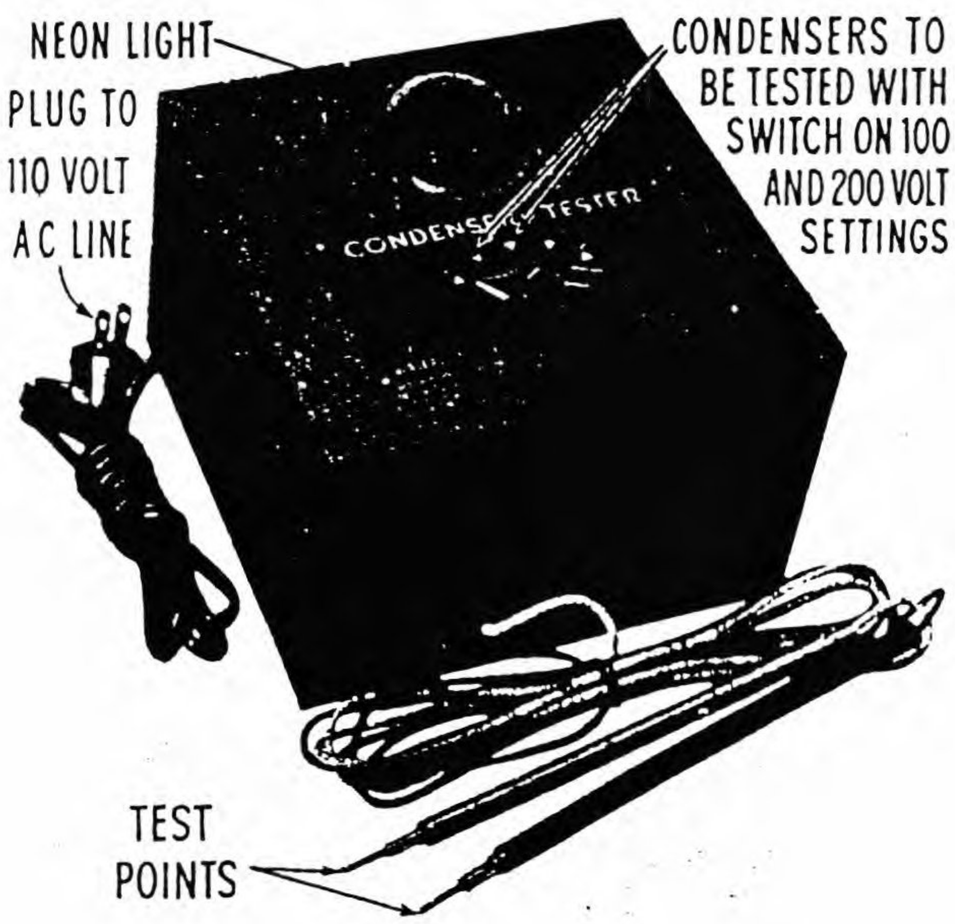

ILLUST. 23--NEON CONDENSER TESTER S.E.-1064.

A sensitive Neon tube type condenser tester is available, which will conclusively show up defects in condenser that cannot be indicated with ordinary test equipment. This Neon condenser tester operates on a 110-volt A.C. current. A special switch on the box allows for testing at four different voltages, ranging from 100 to 600 volts. To determine the exact condition of any condenser, use only the 100 and 200-volt test settings. The use of the 400 and 600-volt test settings will in no way injure the condenser being tested, neither will the readings of the test be as accurate as when using the two lower voltage settings.

Hold one test point on the condenser terminal, the other on the outer metal housing of the condenser. If infrequent flashes occur in the Neon tube with the switch set on the 200-volt position and the tube flashes only for initial charge with the switch set on the 100-volt position, the condenser will pass satisfactorily. If the condenser gives continuous flashes at 200 volts, it should be discarded even though it tests satisfactorily at 100 volts.

This does not apply to the condensers used in the E-4A magnetos. For an E-4A condenser use only the 100 volt test. If satisfactory at this voltage, condenser may be used in the magneto, even though it may flash continuously at the 200 volt test. Good performance is assured when using an E-4A condenser meeting the 100 volt specification.

The Neon condenser tester can be secured by ordering under SE-1064 from any IHC Branch House.

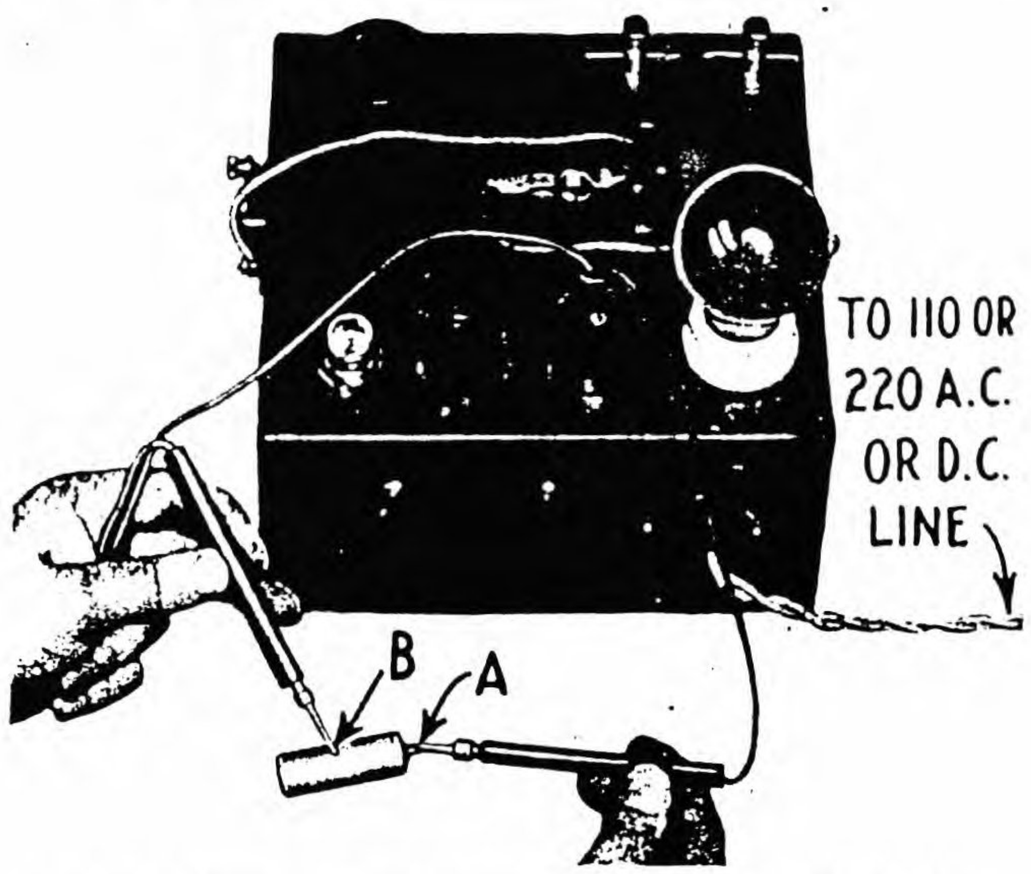

ILLUST. 24--TESTING CONDENSER WITH ELECTRIC TEST SET.

Have a 60-watt, 110-220-volt bulb screwed into the socket inside the test set, and a 15-watt, 110-220-volt bulb screwed into the socket on top of the test set.

Remove the condenser from the magneto and test for short circuit by placing one test point on the terminal screw "A" and the other on the outer metal housing of condenser "B," as shown in illustration. If the condenser is not short circuited, the test lamp will not light.

The test for capacity consists of charging the condenser by holding test points on condenser as shown in illustration and then immediately discharging it by removing test points and placing the side of one of the test points in

contact with the condenser housing and bringing its point close to the terminal screw. A snappy flash should occur. If direct current of 110 or 220 volts is used, this flash will occur every time; if A.C. is used, the test should be repeated a number of times, because in charging with A.C. the contact has to be broken at just the right time, or the charge will be partially removed by the reversal of the charging current.

By repeating the charging process several times it is possible to break the circuit at the proper point to have a charge in the condenser. With alternating current only, the best flashes should be considered in judging the condenser's fitness. With direct current all flashes may be considered as they will be of relatively equal intensity.

The Safety Gap

The safety gap acts as a protection to the winding when abnormal sparking conditions are experienced. The regular safety gap setting on the F-4 is 9/32 to 11/32", and on the F-6, 7/16 to 15/32".

The F-4 sparks are of one polarity. If the magnet is on correctly, the short F-4 safety gap is as effective as the longer F-6 gap. It is possible, even when this gap is set at the high point, for the spark to jump this gap, if the conditions are abnormal enough.

High humidity, extreme high temperature or high altitude, or a combination of all three, may cause internal jumping of the spark. If a magneto starts jumping the safety gap, determine the cause and correct it. These gaps are amply long for almost every condition where internal combustion engines are operated, except high altitudes.

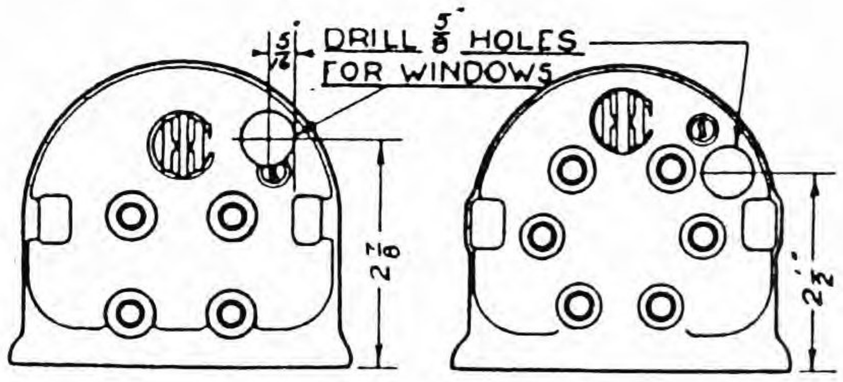

ILLUST. 25--HOLE FOR WINDOW IN F-4 AND F-6 DISTRIBUTOR BLOCK FOR OBSERVING SPARK ACROSS SAFETY GAP.

A spark jumping a safety gap can be readily detected by replacing on the magneto a regular distributor block in which a transparent window has been provided (See Illust. 25). Run the engine for a sufficient time to permit the air in the magneto to attain the normal operating temperature, and observe through the window if spark is jumping safety gap. If it is jumping safety gap, check all spark plug gap settings. It may be necessary to file off the spongy metal at tips of spark plug wires and close gap to .020". If spark still jumps safety gap, with engine running, safety gap may be increased. Cut off and reform the spark plug lead-out closer to the secondary lead. (See Page 11, Illust. 15, Item "G".)

A window, rather than just an opening, must be used; otherwise air conditions in the magneto will change and probably prevent spark jumping. Drill holes in block as shown in illustration; then with a drill slightly larger in diameter, counterbore the same hole. Window can be made of celluloid to fit counterbored hole and then cemented into place with shellac.

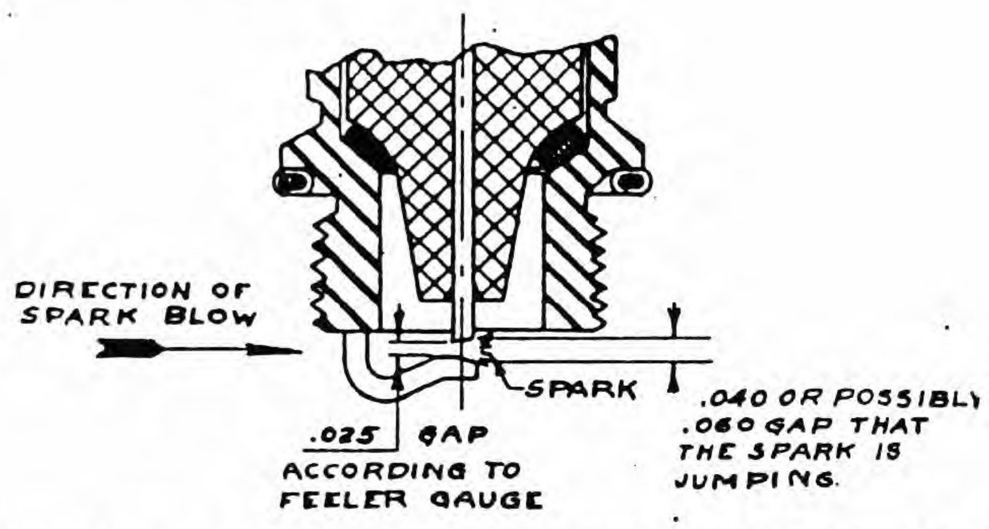

ILLUST. 26--SHOWS HOW THE SPARKS WILL JUMP BETWEEN SPARK PLUG ELECTRODE WIRES WHICH ARE BURNED AT AN ANGLE.

Spark plug electrode wires burn off on one side more than the other, because the spark is blown there. This is especially true when the engine is carrying a load. The sparks may never jump the actual gauge gap until the engine is idled at low speed.

Keep the spark plug gap set close (.025 to .020 inches). In many cases even then the spark is jumping .040 to .060 inches due to turbulance in the combustion chamber (see illustration).

Spark Jumps to Frame Cover

If the spark still jumps to the frame cover after reforming safety gap, three coats of insulating varnish may be applied to the inside of the frame cover, allowing sufficient time for drying between each coat. A spaghetti insulator can be slipped over the high tension lead-out, or it may be coated with insulating varnish with the exception of the contact point. Another method is to

place a thin sheet of bakelite under the roof of the frame cover. We have never as yet seen a case that needed varnish coating as suggested; the information is being given, however, as an extreme emergency measure for very high altitudes, and should not be done unless absolutely necessary.

Timing the Distributor Gears

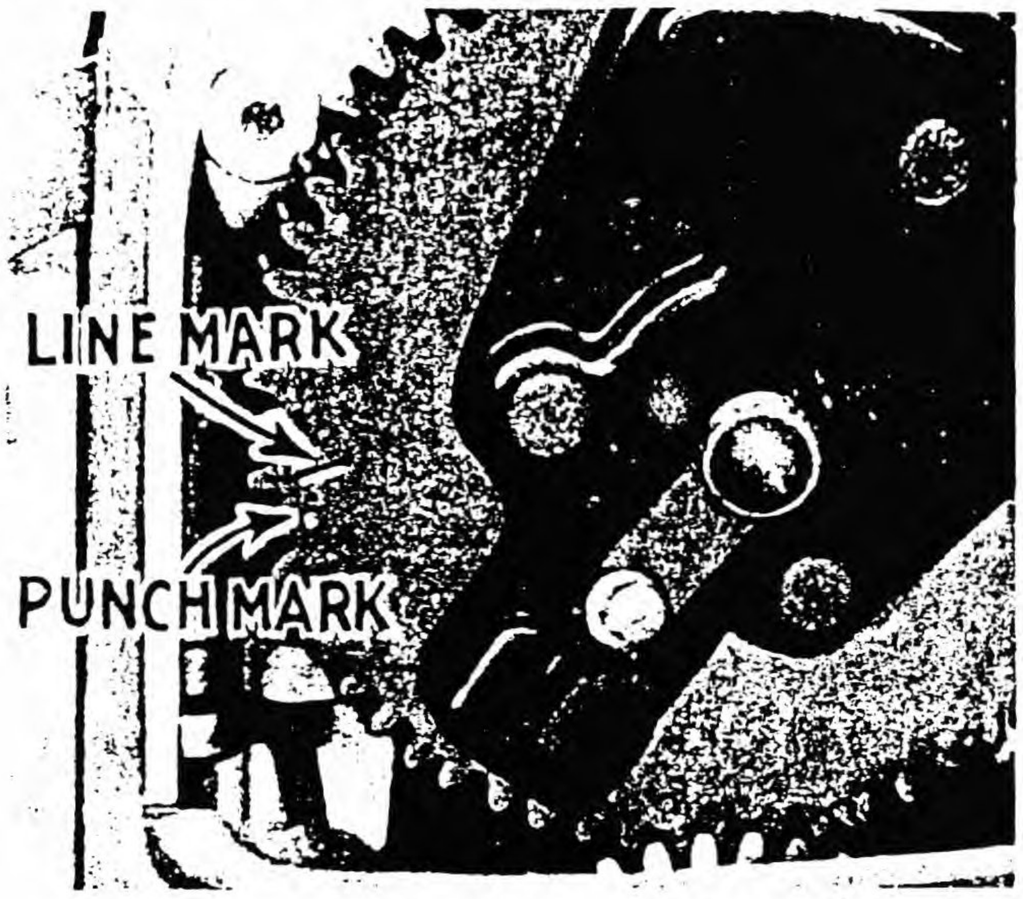

ILLUST. 27--SHOWS PUNCH MARK USED FOR TIMING 35° SPARK RANGE MAGNETO AND LINE MARK USED FOR TIMING MAGNETO OF REDUCED SPARK RANGE, EXCEPT F-4 MAGNETO USED ON THE 4-CYLINDER DIESEL ENGINE.

The standard F-4 and F-6 magnetos are made to advance the spark 35° measured on the engine crankshaft when timed on dead center with fully retarded spark.

The 4- and 6-cylinder Diesel engines, the PA-100 power unit using gasoline and the 3-5/16 x 4-1/8 6-cylinder harvester thresher engines all have magnetos timed for less than 35° spark advance. The Diesel magnetos have the spark fixed by an external link on the breaker cover.

In the case of the 4-cylinder Diesel, magnetos that run only during the starting period, the distributor gears have not been retimed. It has not been found necessary to retime them, due to the very small amount of running that they do.

Where the magnetos are special and are retimed, care should be exercised to see that they are installed on the engines with the spark limiting mechanism in place.

Use the round punch mark on both the F-4 and F-6 standard magnetos for 35° spark range. Use the line mark for all magnetos of reduced spark range, except the F-4 magneto used on the 4-cylinder Diesel which is timed with the punch mark.

Designating Markings and Special Features of F-4 and F-6 Magnetos

All F-4 Magnetos operate at Crankshaft Speed.

1. **F-4 Magneto, 21447-D—**
   Black magnet; 35° spark range; E4A Type Impulse Coupling. Furnished as parts and used as regular equipment on all earlier 4-cylinder engines. The dot on the distributor gear is used for timing.

2. **F-4 Magneto, 26335-D—**
   Black magnet; 35° spark range; F-4 Type Impulse Coupling. Used as regular equipment on all 4-cylinder engines and tractors using 35° spark range. The dot on the distributor gear is used for timing.

3. **F-4 Magneto, 28855-D—**
   Has "D" stamped on the frame preceding the F-4 serial number. Black magnet. Fitted with external timing link holding the spark range to 15° with E4A Type Impulse Coupling. This magneto is used on all 4-cylinder Diesel engines. The timing on this magneto is made by using the dot.

4. **F-4 Magneto, 36940-DM—**
   Has "W" stamped on the frame preceding the F-4 serial number. Green magnet. 18 to 25° spark range, which must be limited by an external stop, preventing the timing lever from moving more than 18° to 25° from full retarded position. Uses the F Type Impulse Coupling. This magneto will be used on Waukesha 4-cylinder engines for harvester-threshers and on various 4-cylinder engines of other makes used by the Western Austin Company of Aurora, Ill. This magneto is timed by using the line mark on the distributor gear.

All F-6 Magnetos operate at ¾ Crankshaft Speed.

1. **F-6 Magneto, 21448-D—**
   Does not have a letter preceding the serial number. Black magnet; 35° spark range measured on the engine crankshaft. F Type Impulse Coupling. Used as regular equipment on most of our 6-cylinder engines. This is the standard F-6. It is timed by using the dot on the distributor gear. The timing arm moves 26-1/4° to give 35° on the engine crankshaft.

2. **F-6 Magneto, 29826-D—**
Has "H" stamped on the frame preceding the F-6 serial number. Red magnet. Used on PA-100 Power Unit with gasoline carburetor for 17-1/3° advance (measured on the engine crankshaft.) It is also used on 3-5/16 x 4-1/8 6-cylinder harvester-thresher engine. In this case the spark advance limiting mechanism permits a maximum of 18° measured on the engine crankshaft. This magneto is timed by using the line mark on the distributor gear.

3. **F-6 Magneto, 32361-D—**
Has "D" stamped on the frame preceding the serial number. Has white magnet and impulse coupling housing. This magneto is fitted with a timing link that provides 15° spark advance measured on the engine crankshaft. It is timed by using the line mark on the distributor gear. This magneto is used on the large 6-cylinder Diesel engine. It is also fitted with a special main pawl in the impulse coupling and special engaging pawls. These are designed to lower the "throw-out" speed of the coupling and thus insure easier starting.

4. **F-6 High Tension Inductor Type Magneto, 60447-D—**
A new magneto for 6-cylinder engines equipped to burn natural gas. The new magneto is incorporated as a part of the natural gas attachments for the U-21, PA-40, and PA-50 power units and regular equipment on the PA-100 unit natural gas burning engine, displacing the regular magneto 21448-D in all these applications effective with Serial No. 42286, since a magneto generating a higher voltage is required for natural gas burning engines, especially when engine is operated at slow speed.

When operating power units on natural gas and using them for oil field work, the ignition requirements are much greater than are ordinarily necessary, due to the much higher compression ratio used and the dryness of the fuel, or a higher voltage is necessary to jump the spark plug gap.

The outward appearance on this special F-6 magneto is the same as the standard magneto; however, basic changes have been made to secure the desired increased output. This magneto can be identified by the prefix letter "N" in front of the serial number. The breaker points have been set to .013" for greater point life. This setting should be maintained at all times.

The ignition system of natural gas units should be inspected at the end of every 200 hours of continuous operation or approximately once a week or every ten days. At this time the breaker points should be cleaned and filed, and if necessary, reset. If necessary, repack the fiber grease in the pocket of the rubbing block. Make sure the breaker points themselves are free of grease and oil, otherwise excessive arcing and rapid wear of the points will occur.

Inspect the distributor disc and, if necessary, clean the excessive tracking with a soft rubber eraser. Do not use sand paper or any abrasive material as this will scratch the disc and cause excessive wear of the brush, which in turn will pile up carbon on the brush path and eventually lead to cross-firing. The use of an ordinary pencil eraser is all that is necessary to thoroughly clean the disc.

The quality of the inspection and the care given the spark plugs is one of the most important items affecting the efficiency of natural gas operation in oil field work. Spark plugs should be inspected at least every 200 hours of operation or approximately every week to ten days.

Due to the dryness of the fuel, the severe operating conditions, and the rapid accumulation of hours, the electrodes of the spark plugs may wear to an abnormal gap in a relatively short period of time. When making an inspection, if the spark plug gap has been burned wide, and the electrodes appear to be spongy on the tip, file off this spongy material and re-set the gap to .013 to .018 inches. This gap should be maintained for increased hours of operation between inspection and also for better engine performance at lower speeds under full load.

In checking the gap of the spark plugs as removed from the engine, do not be mislead by a gap which may appear to be only .025 inches with a feeler gauge whereas under actual operating conditions the spark may have to jump .040 to .060 inches gap (refer to the illustration.) Turbulance in the combustion chamber will blow the spark in the somewhat circular path as shown. As a matter of fact the spark may never jump the actual gauge gap, but will be required to jump a gap twice as large. Therefore, spark plugs should be inspected every 200 hours, for conditions mentioned above, filed, and re-set to our recommended gap

for this type of work, or 0.13 to 0.18 inches.

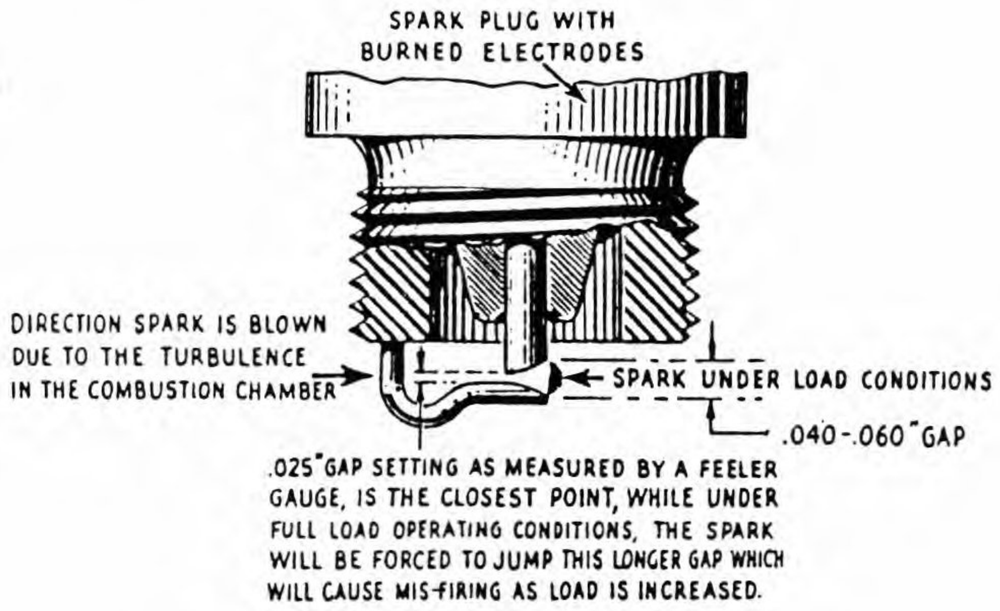

ILLUST. 28--DIFFERENCE BETWEEN ACTUAL AND MEASURED SPARK GAP.

The use of colder spark plugs than those recommended for standard production will give greater life and better operation when using natural gas. Since no trouble will be experienced with fouling when operating under these conditions, a plug one or two steps colder may be used. (See Service Bulletin S-3145A-1408). This will greatly increase the spark plug life and also result in better engine performance. Do not use a plug so cold that the spark will jump between the center electrode and the shell of the plug, for this will cause the engine to mis-fire.

All parts of the special F-6 magneto are the same as the standard F-6 magneto except for the coil, frame, secondary leadout, rotor and the setting of the breaker points.

Distributor Shaft and Bearing

After the distributor gear is properly meshed with the rotor pinion as mentioned on Page 17, Illust. 27, see that the teeth have a very slight amount of clearance so that no radial pressure is exerted on the distributor shaft bearing. Use shims under the bearing bracket, if necessary, to provide this clearance.

The distributor shaft end play should not be more than .014" or less than .003"; preferably .003". The reason for this is that excess end play at this point allows the distributor disc to travel back and forth, causing more or less uneven brush pressure and creating excessive wear on the disc brush track. This end play may be adjusted by placing special shim washers Number 12588-C which are .004" thick and Number 12589-C which are .008" thick, between the retainer spring and the rear thrust washer.

Effective with F-4 Serial No. 409158 and F-6 Serial No. 34967, the bushing in the distributor bearing is changed to a porous bronze which permits oil to filter through from oil passage. Oil passage is also changed to a short lead over the bushing, eliminating the oil wick and cork.

Primary Lead-Out

The primary lead-out fastening and positioning on the condenser end has been described under "The Condenser" (Page 15). This wire carries the primary current from the winding to the breaker. It is made of carefully insulated stranded copper wire chosen for its long fatigue life when flexed repeatedly. It is long enough so that the circuit breaker may be removed and examined without disconnecting at the breaker end. When the breaker is replaced, this extra length of wire should be tucked under the primary lead-out shield 21331-D in the magneto frame.

Distributor Disc

The distributor disc and brushes should be examined periodically and the disc should be kept clean. Disc can be cleaned with a soft rubber eraser which is free of grit and abrasives and will not scratch disc surface. If the disc becomes badly worn it may be replaced on the F-4 by driving out three bakelite pins that hold the disc to the gear, and on the F-6 by removing three bakelite screws that hold the disc to the distributor block. When replacing the bakelite pins or screws the heads should be given a light coat of shellac. This will help prevent them from loosening and seals them against the possibility of changing shape from the effects of moisture. The pins on the F-4 magneto must be a tight fit in the distributor gear and a close push fit in the disc.

When the brushes and the disc are properly related the brush track will wear very slowly; it will be polished and reasonably smooth. If other than this condition exists, check the gaskets for moisture entrance, or dirt entry, and be sure that the proper brushes are used.

If the magneto has been operating with the proper spark advance in relation to the distributor gear setting, a slightly blackened condition ("spark spot") will exist on the insert at the

leading end of the brush contact. If the magneto has been operating with the spark not properly advanced, this blackened spot will be at the center of the insert. The longest life of the distributor disc can only be secured by the proper timing and the exclusion of all water.

When replacing a distributor disc, the distributor disc pin should first be pushed into place in the disc before final assembly to the gear. Check the clearance between the body diameter of the pin and the hole in the disc. If any excessive amount of clearance exists, the disc may eventually come loose after assembly and cause excessive disc and brush wear which may result in faulty performance of the magneto.

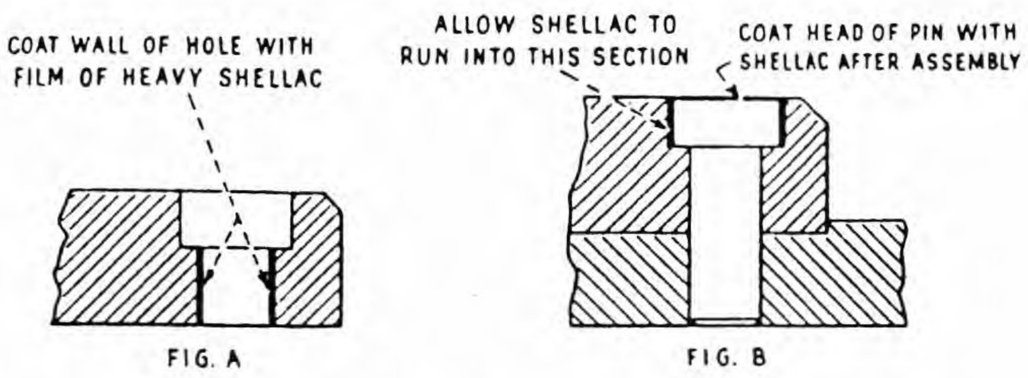

ILLUST. 29--INSTALLING NEW DISTRIBUTOR DISC PIN.

To correct such cases where excessive clearance exists the following procedure should be used. Coat the hole in the disc with a film of heavy shellac as shown in sketch Fig. "A". Allow the shellac to dry thoroughly. Place disc on gear. Coat pin with shellac and drive into place through the disc and into the gear. Be careful not to strike the disc in doing this since the disc may readily be cracked. Then coat the head of the pin with shellac allowing same to run into the space between the head and the counter bore in the disc, (see sketch Fig. "B"). Wipe off excessive shellac from the face of the disc. Be absolutely certain that no shellac remains in the brush path. This procedure if carefully followed will give an assembly which will remain tight indefinitely.

Distributor Brushes

These brushes have to be of the proper material to match the disc they are rubbing against. This material has been worked out for each magneto by test. Be sure that E4A brushes are not used in F-4 magnetos. The E4A brush is grooved lengthwise and the F-4 has no groove. The latest and most successful F-4 brush (No. 32032 DXa) has a flat spot on the neck for holding the brush spring. The latest and most successful F-6 brush is the new National Carbon grade, lettered "FK" on the side. (See Illust. 13.) These brushes run relatively clean and are less aggressive than earlier brushes.

Charging F-4 or F-6 Magnet

Unless a magnet is cracked by rough handling, it usually improves with age, but it loses a little of its magnetism gradually. Always recharge the magnet during an overhaul. It is a good investment.

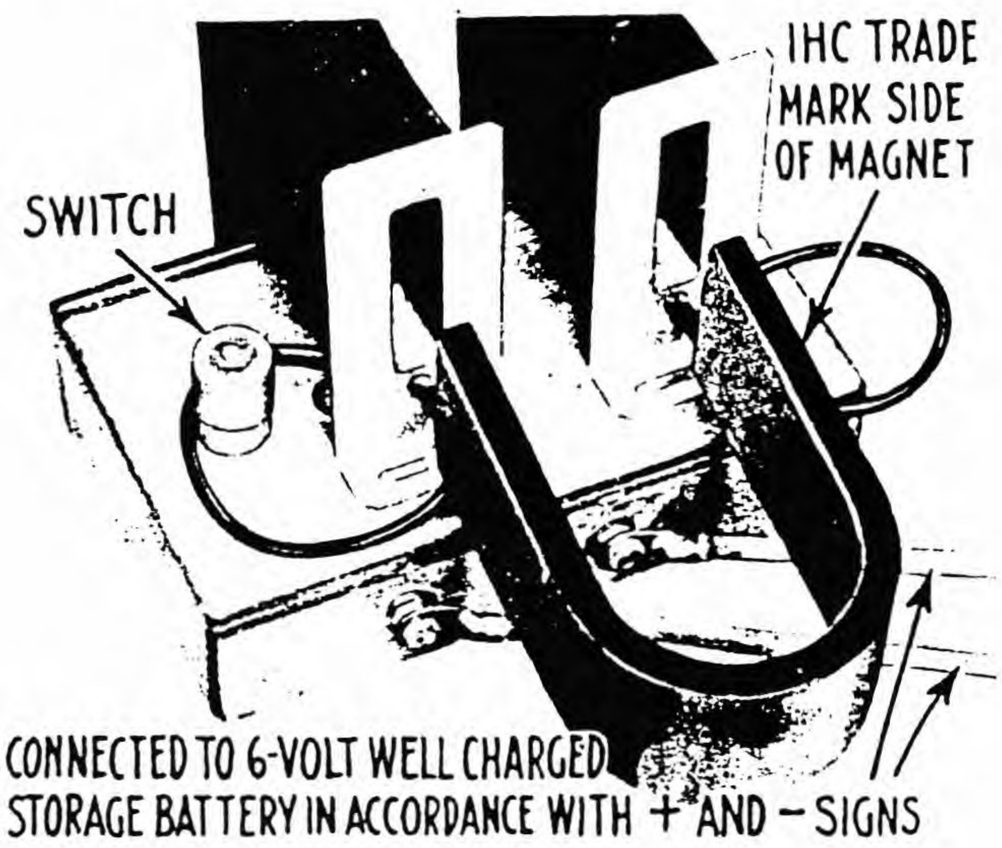

ILLUST. 30--SHOWING PROPER METHOD OF INSERTING F-4 AND F-6 MAGNETO IN SPOOL TYPE CHARGER.

Magnetizer terminals are identified + and - , and must be so connected to a well-charged 6-volt storage battery. The terminals are at the front of the magnetizer, and magnet should be inserted into spools from this end, with IHC trade-mark on right; magnet will be magnetized in accordance with original factory polarity. If magnet has no I H C trade-mark, hold magnet in front of spools and depress switch an instant. (See Illust. 30.) Magnet is being inserted properly if magnetizer tends to pull it into spools.

Push magnet all the way into spools and place keeper over ends. (See Illust. 31.) Compress magnetizer switch once or twice for total of about two seconds. To keep switch depressed longer accomplishes no further good, but discharges battery unnecessarily and heats up magnetizer.

Slide keeper downward off ends of magnet, pull magnet from spools and immediately assemble on magneto. Never slide keeper up on side of magnet, as

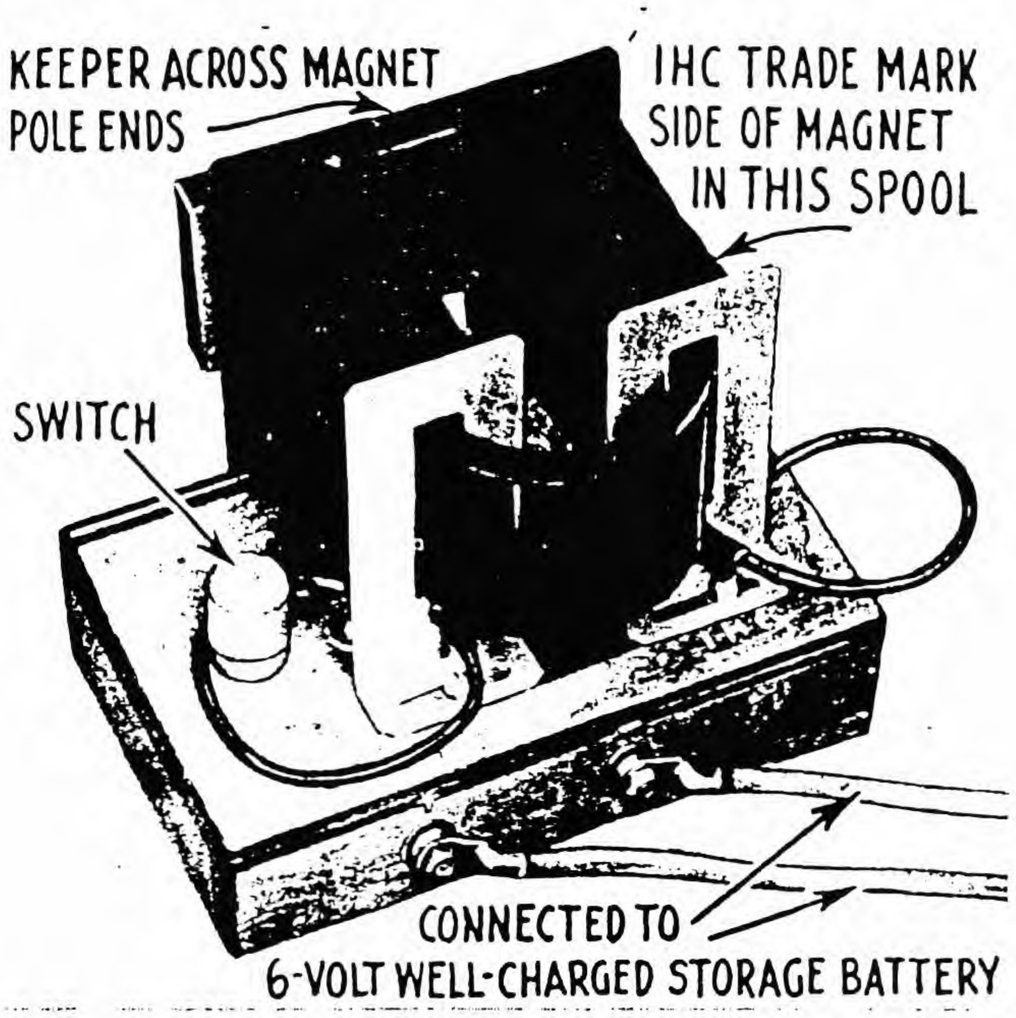

ILLUST. 31--RECHARGING MAGNETO MAGNET ON SPOOL TYPE CHARGER.

this will result in partial demagnetization.

To check for correct polarity, the north seeking pointer of a compass should point to the I H C trade-mark side of the magnet. Place a soft iron keeper across the magnet ends when magnet is removed from the magneto.

Because all the sparks of the F-4 magneto are of the same polarity it is essential that the magnet be assembled correctly. The trade-marked end of the magnet must be on the same side as the serial number on the magneto frame. This trade-marked end of the magnet should always attract the North pointing end of the compass. (See Illust. 32.) This makes the polarity of the stationary breaker point positive and, with a condenser of the proper capacity, the slight crater or depression caused by the normal spark action between the points will always be on the stationary point. The peak will build up on the movable point. This means that the cheaper of the two points will be the one that will have to be replaced when such replacement is required. The peak may easily be removed from the movable point, which will make it the same as new.

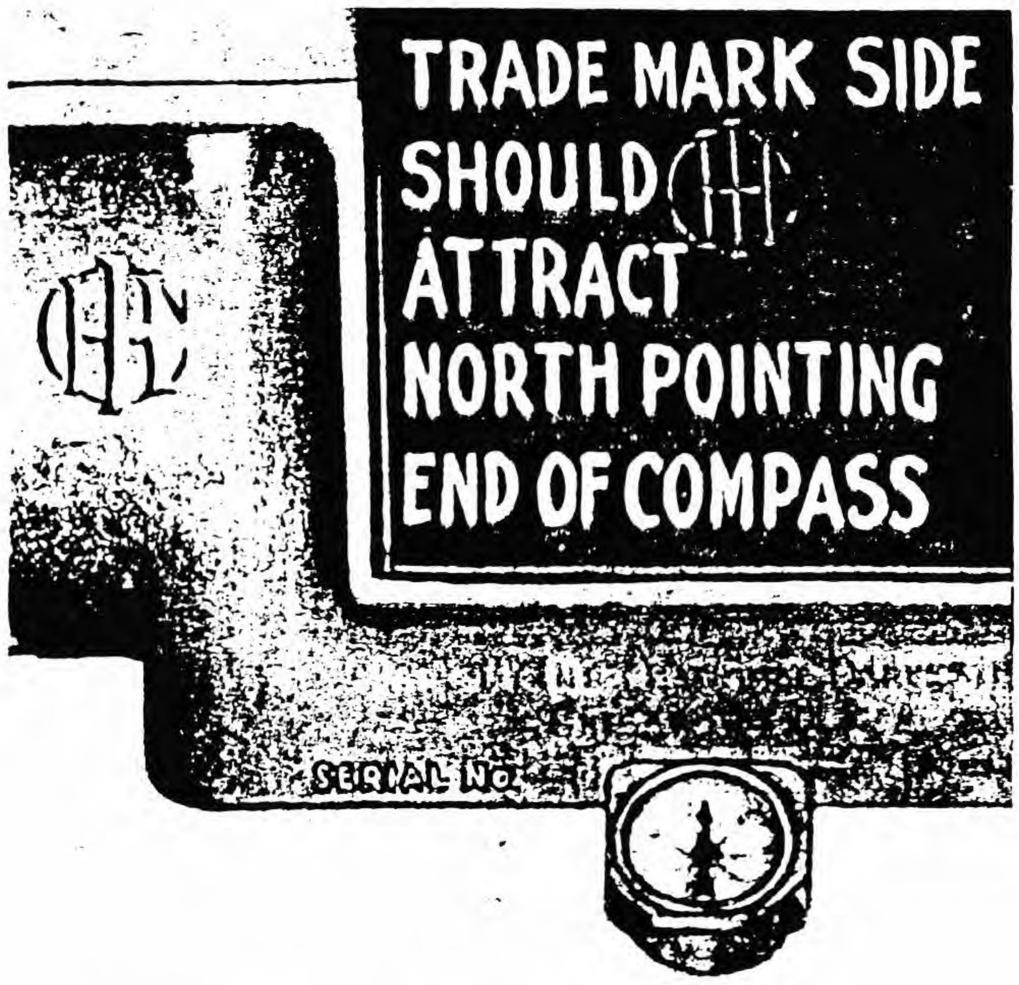

ILLUST. 32--SHOWING PROPER ASSEMBLY OF MAGNET ON F-4 MAGNETO. TRADE-MARK ON SAME SIDE AS SERIAL NUMBER.

The effectiveness of the F-4 safety gap is also dependent on correct magnet polarity, so be sure to make this assembly correctly.

Breaker Points

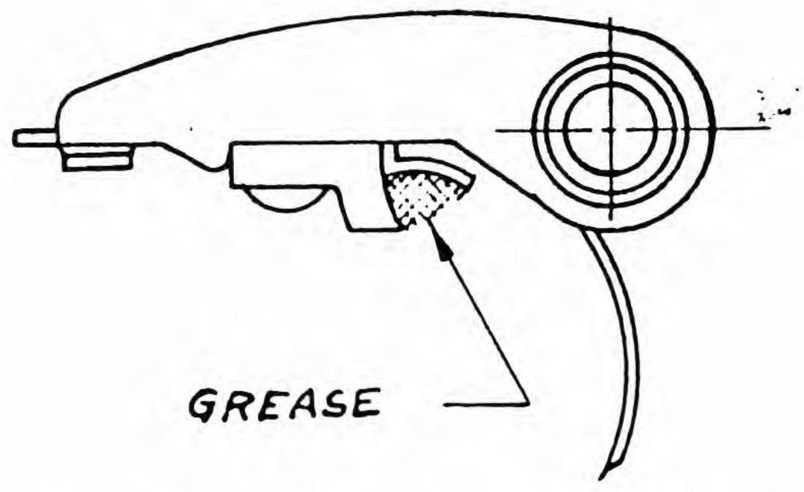

ILLUST. 33--WHERE MAGNETO GREASE SHOULD BE PLACED ON BREAKER ARM TO LUBRICATE RUBBING FIBER.

The breaker point life may be very materially increased by keeping the breaker arm rubbing fiber properly lubricated with the long life grease furnished in a tube with each magneto. Also keep points set to gauge. Wide point settings burn contacts rapidly.

The breaker point setting, that is the distance between the points in their wide-open position, is .013" in the F-4 and .020" in the F-6. This setting should be maintained as close as possible for maximum efficiency and checked periodically. See that the points are reasonably flat. File them a little if uneven point contact is formed. (See Breaker Adjustment, Page 9, Illust. 10.)

Breaker Cup Removal

A simple tool for removing the circuit breaker cup may be made from a discarded flat impulse coupling spring.

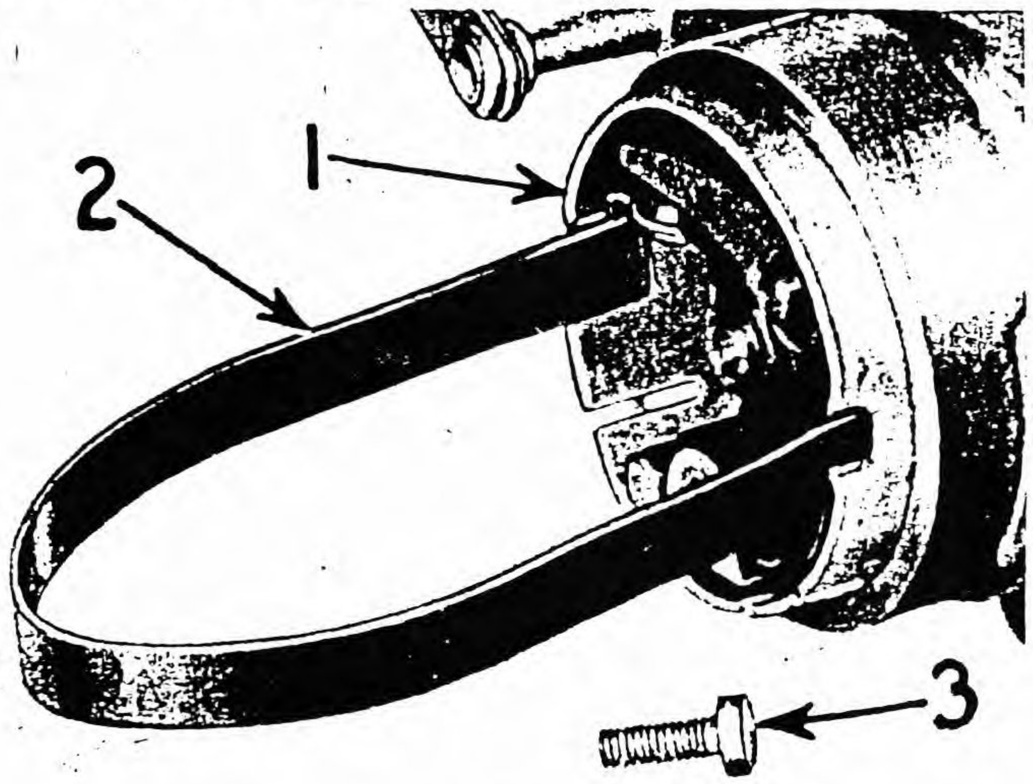

ILLUST. 34--HOW TOOL IS USED TO REMOVE BREAKER CUP. 1--BREAKER CUP. 2--SPRING TOOL. 3--PRIMARY LEAD-OUT TERMINAL SCREW.

Bend the spring into a "U" shape and turn a short lip at a right angle on both legs of the "U". These two lips should be long enough to hook in back of the bent over lips on the breaker cup slots which are used to move the cup to advance or retard the spark.

To remove the breaker cup, first remove the primary lead-out terminal screw. A light blow on the head of this screw after it has been loosened about two turns will free the lead-out terminal and facilitate the breaker cup removal. The breaker cup must be positioned so that the slot in the rear of the cup registers with the pin which is a stop for the advance and retard action. A light pull on the puller, as shown in Illust. 34, will then remove the breaker cup.

Distributor Block and Gaskets

For satisfactory performance of a magneto, water should not be permitted to find its way to the inside. The F-4 and F-6 magnetos have for some time been fitted with distributor block gaskets of waterproof construction. This is being done in two ways, one by waterproofing the felt, and the other by applying a narrow lamination of artificial rubber in the gasket to prevent seepage from working through.

In wet localities see that these gaskets are used in case ignition troubles

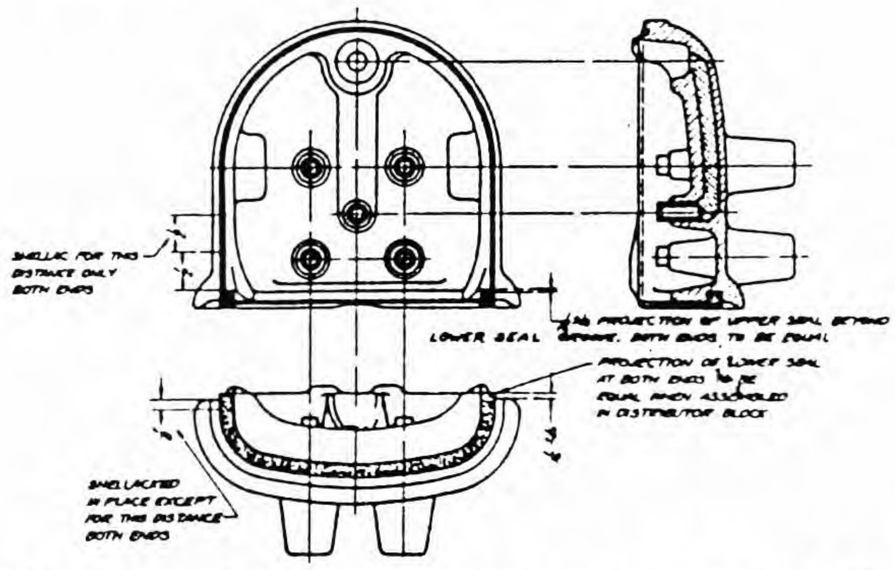

ILLUST. 35--PROPER METHOD OF ASSEMBLING DISTRIBUTOR BLOCK GASKETS.

are experienced. Assemble them as shown in Illust. 35.

Keep the outside of the distributor block clean of mud and water. Some soils produce a mud that is a very good conductor of electricity. With the exterior surfaces of the distributor block coated with such material, the electrical losses may readily reach values that jeopardize ignition, especially when starting is attempted.

Removing F-4 or F-6 Rotor from Magneto Frame

To remove the rotor from either of these magnetos, first remove the impulse coupling. Use puller SE-912 to avoid injury to the rear of the magneto frame. Then take off distributor block, magnet, magneto frame cover, distributor disc, bearing assembly, and breaker housing cover. Remove primary lead-out terminal screw and three breaker housing screws. Breaker housing can then be removed from magneto frame and rotor taken from frame.

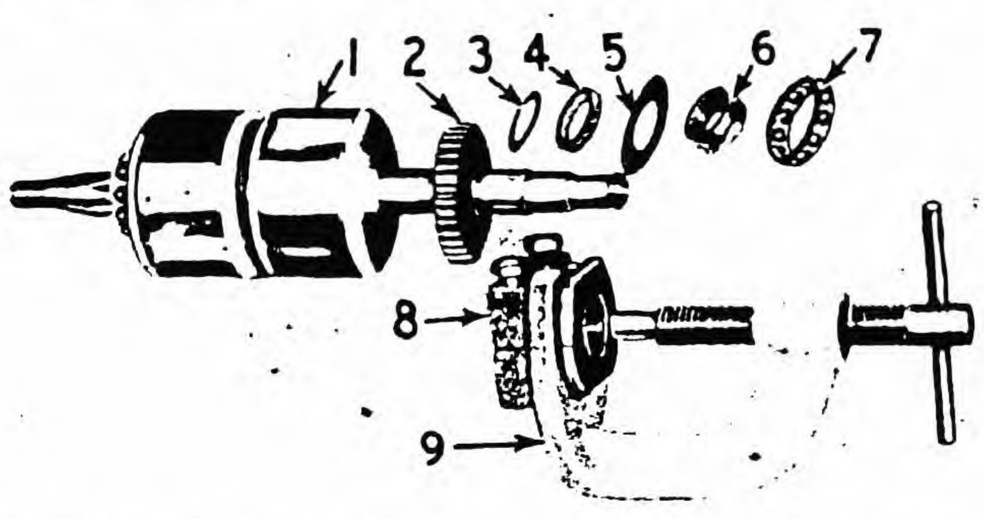

ILLUST. 36--EXPLODED VIEW OF ROTOR PARTS WITH INNER RACE PULLER TOOL SE-839. 1--ROTOR. 2--ROTOR PINION. 3-ROTOR SHIMS. 4--ROTOR SHAFT BEARING SPACER. 5--OIL FLINGER. 6--INNER BEARING RACE. 7--BALL BEARINGS AND SEPARATOR ASSEMBLY. 8--BEARING RACE ADAPTER. 9--PULLER.

Inner bearing race can be readily removed from the rotor by using puller and adapter SE-839, shown in above illustration. It is necessary to remove inner bearing race when removing or inserting rotor shims for preloading rotor bearings as explained on following page.

Removing and Replacing Magneto Outer Bearing Race

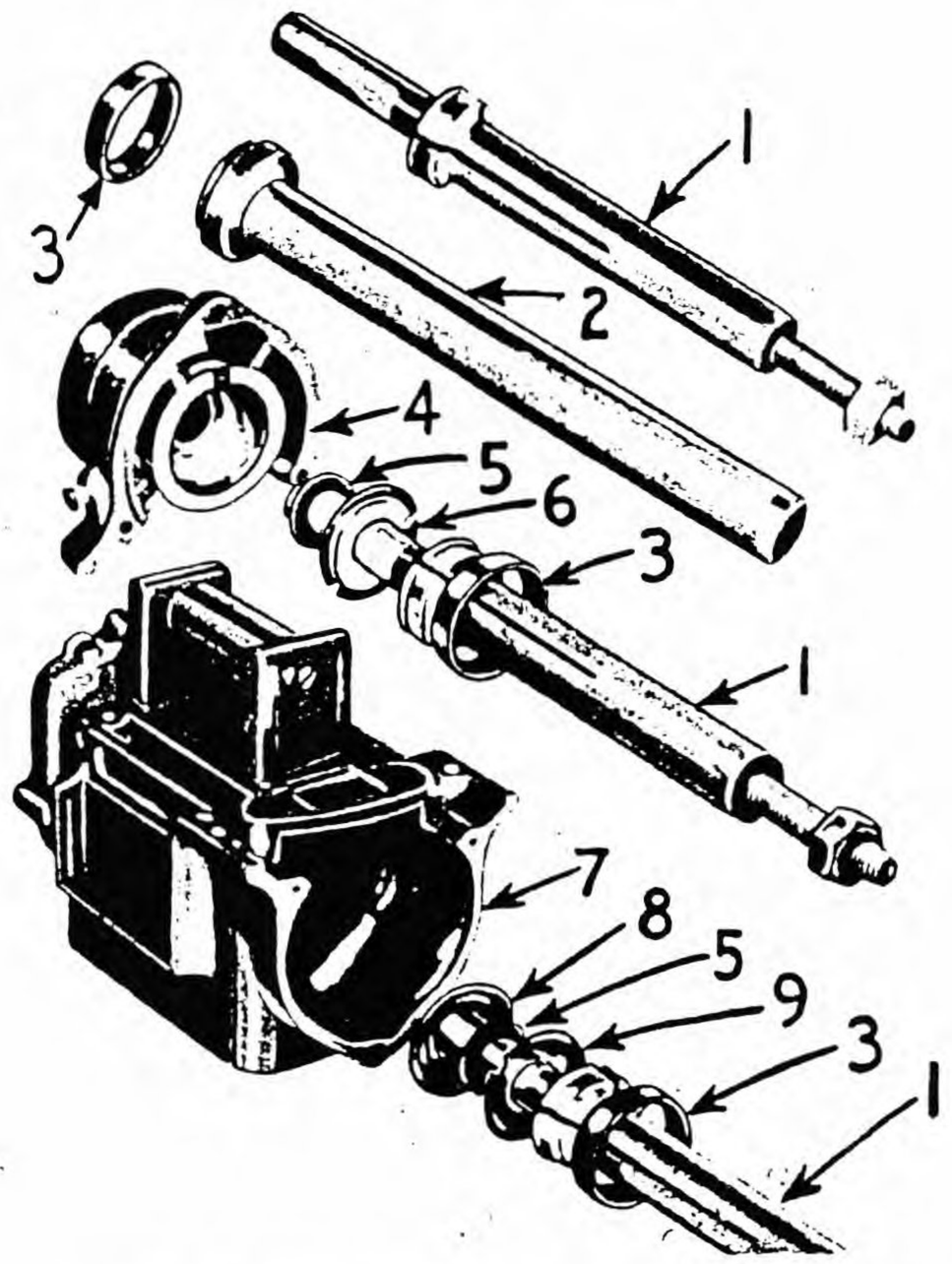

ILLUST. 37--TOOLS USED FOR REMOVING AND REPLACING MAGNETO OUTER BEARING RACES.
1--MAGNETO BEARING RACE PULLER TOOL SE-1020. 2--MAGNETO BEARING RACE REPLACER TOOL SE-1021. 3--OUTER BEARING RACE. 4--BREAKER HOUSING. 5--FELT. 6--FELT RETAINER, BREAKER HOUSING END. 7--FRAME. 8--FELT RETAINER, OUTER. 9--FELT RETAINER, INNER.

Magneto outer bearing race in both breaker housing and magneto frame can be readily removed with tool SE-1020 as shown in illustration. Loosen expander and insert tool into bearing race in the direction shown. Manipulate split sleeve flange through bearing race and hold it against felt retainer. Now draw up on expander by applying a wrench to flats on threaded end of expander and turning in an anticlockwise direction until a definite pressure is felt. Then tighten hexagon nut, and carefully drive bearing race from place.

Before replacing outer bearing races make sure felts and retainers are correctly assembled in place. Set bearing race on end of tool SE-1021. A small amount of clean grease will hold race on tool. Carefully line up tool over hole and drive race in place.

Preloading Rotor Bearings

In order to maintain the nigh efficiency of this type of magneto, it is necessary to reduce the air gaps in the magnetic circuit to a minimum. To do this, the rotor clearance is held close. A small amount of end play would allow the rotor to rub, due to the construction of the ball bearings. They are made to take lateral as well as radial load.

To avoid any possibility of the bearings becoming loose, we preload them from .000 to .002" lengthwise. To do this, assemble the rotor with just enough shims to set the end play at nothing, or a point where no perceptible play can be felt and still be free. This is to be tried with the rotor in the frame and the bearing housing in place and all the screws in and tight. The bearings should be free of grease and oil to get an accurate fit. Then remove the bearing housing, bearing inner race and flinger, and add one .002 or .0025" shim. (See Illust. 36.) The washer shims should be between the inner race and the gear on the rotor shaft. After this setup is completed be sure that the shaft does not bind and that the preloading was all done with the last placed shim of .002 or .0025". Too much preloading will ruin the bearing. Some relief to these bearings is provided as soon as the magneto starts to warm up on the engine. The aluminum frame expands more rapidly than the steel rotor shaft and thus relieves the preloading to a large degree.

Timing Magnetos to Engine

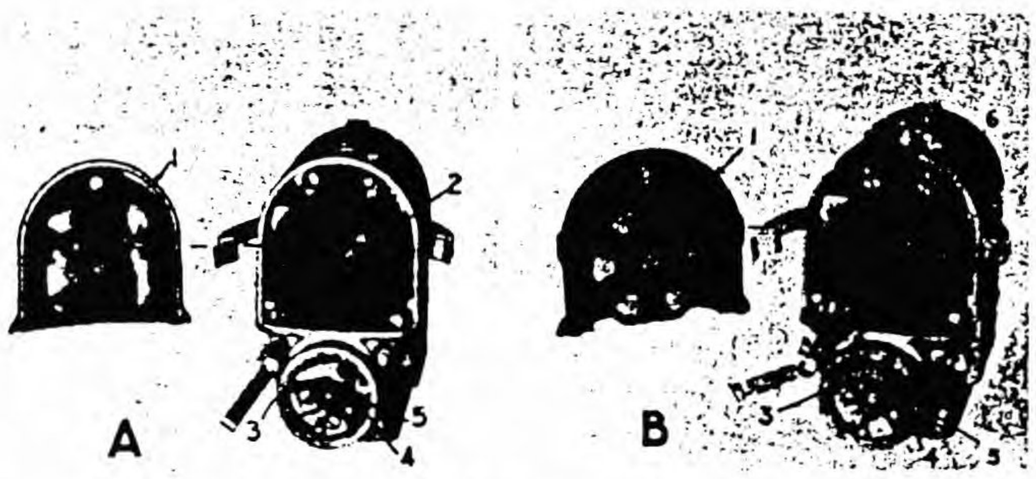

ILLUST. 38--(A) TIMING INTERNATIONAL F-4 MAGNETO TO ENGINE. (B) TIMING INTERNATIONAL F-6 MAGNETO TO ENGINE.
1--DISTRIBUTOR BLOCK. 2--DISTRIBUTOR DISC SEGMENT DELIVERING SPARK TO NO. 1 CYLINDER. 3--BREAKER POINTS JUST OPENING. 4--GROUND CONTACT SPRING AGAINST BREAKER STOP. 5--BREAKER STOP. 6--DISTRIBUTOR BRUSH SET FOR DELIVERING SPARK TO NO. 1 CYLINDER.

With the breaker points cleaned and adjusted as outlined on Page 9, replace breaker housing cover, move the lever end up as high as it will go and remove the cover. This places the breaker assembly in full retard position with ground contact against breaker stop. In this position the magneto will deliver no spark.

Secure the magneto in place on the magneto bracket by inserting the magneto base screws loosely in the magneto. Do not use base screws longer than the originals as they will damage magneto.

Place No. 1 piston of engine on firing dead center. Compression stroke can be determined by removing No. 1 spark plug, placing the thumb over the opening and cranking engine until an outward pressure is felt. Then line up "DC" mark on flywheel with mark on flywheel housing.

Release the impulse coupling as explained on Page 25. This makes it inoperative. Remove the two coupling cap screws and shims. Take off distributor block. Grasp the magneto half of adjustment coupling and rotate it clockwise (as viewed from the coupling end) until distributor disc on the F-4 magneto or distributor brush on the F-6 magneto are in the position shown above, with the breaker points just starting to open.

The magneto is now correctly timed. Without changing this position, replace the magneto drive coupling cap screws and shims. The coupling is so made that only two holes line up exactly opposite each other; the cap screws must not be forced or the setting will be incorrect.

Tighten magneto down in place on magneto bracket, replace distributor block, breaker housing cover, and spark plug cables.

How the International F-Type Impulse Coupling Works (See Illustrations 39 and 40)

A brief description of how the F-type impulse coupling operates follows: The cam member (10) is locked to the magneto drive shaft on the engine and always rotates steadily at a definite ratio to the engine speed. The magneto member (8), with drive spring and engaging pawls, is keyed to the magneto rotor shaft driving end (7). Cam member and magneto member are connected by a spiral drive spring, shown in magneto member (8), Illust. 39.

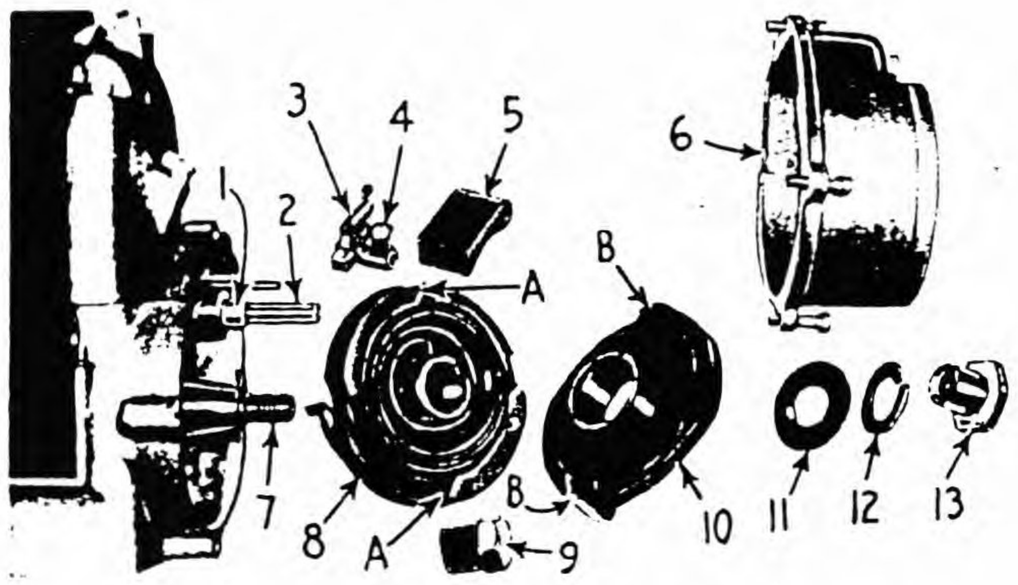

ILLUST. 39--EXPLODED VIEW OF F-4 TYPE IMPULSE COUPLING.
1--PAWL SPACER. 2--PAWL PIN. 3--PAWL LATCH SPRING.
4--ENGAGING PAWL LATCH. 5--PAWL. 6--COUPLING COVER.
7--MAGNETO ROTOR SHAFT. 8--MAGNETO PAWLS WITH ENGAGING PAWLS AND DRIVE SPRING. 9--IMPULSE COUPLING PULLER, SE-912.
10--CAM MEMBER. 11--WASHER. 12--LOCK WASHER.
13--COUPLING NUT.

As the cam member and magneto member rotate slowly, a pawl (5), which pivots on a pawl pin (2) mounted to the magneto frame, engages in the upper ratchet slot in magneto member and prevents magneto member from turning. Cam member continues to turn and winds up drive spring for approximately 46° on the F-6 magneto and 64° on the F-4 magneto. Pawl is then tripped from ratchet slot by cam member (10). Spiral drive spring unwinds, hurling magneto member unit and rotor rapidly forward until end of milled slots (A) in magneto member strike lugs (B) on cam member Illust. 39. Complete coupling will then rotate at same speed as a unit until pawl catches on following ratchet slot. There are two equally spaced ratchet slots in the magneto member of the F-4 magneto coupling and four ratchet slots in the F-6 magneto coupling. Tripping of the pawls is timed so as to cause a spark to occur between top dead center position to 8° after dead center, provided magneto is timed correctly to the engine.

Impulse Coupling—General

A magneto is capable of delivering suitable sparks at higher speeds, but for slower speeds and for starting, it is necessary to drive the rotor or armature through an impulse coupling. This impulse coupling permits the production of a strong magneto spark at the slowest cranking speeds. The impulse couplings furnished with the International F-4 and F-6 magnetos are completely automatic and require no adjustment or manual engaging or disengaging An occasional cleaning and generous lubrication with cream separator oil is the secret of satisfactory impulse coupling performance.

The following section of this Manual covers the F-type impulse coupling and the E4A type impulse coupling furnished with either the International F-4 or the F-6 magnetos.

INTERNATIONAL F-TYPE IMPULSE COUPLING

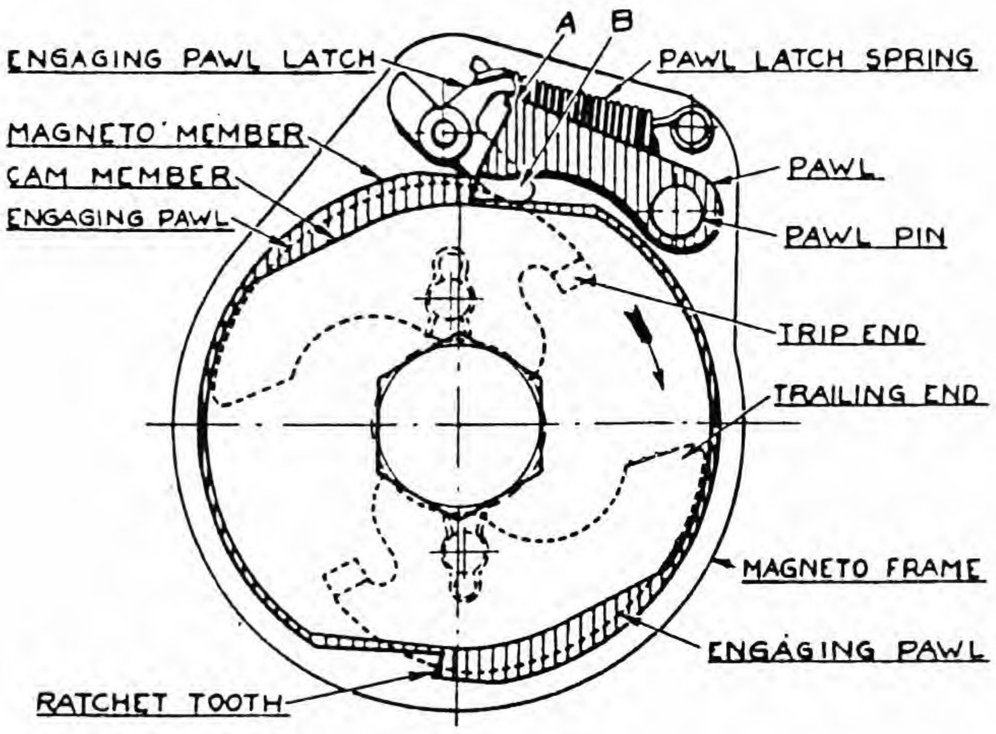

ILLUST. 40--END VIEW DRAWING OF F-4 TYPE IMPULSE COUPLING.

The impulse coupling on the F-4 magneto is designed to automatically throw out at 180 to 280 R.P.M., the F-6 at 130 to 200 R.P.M., and the F-4 Diesel at 60 to 130 R.P.M. As the speed of the impulse coupling increases, the cam member disengages the pawl from the ratchet teeth with greater force. When the throw-out speed is reached the pawl is thrown high enough to catch latch tip under pawl ledge "A", Illust. 40. In this position pawl is supported out of engagement and the coupling rotates as a single unit, turning the magneto rotor at a steady speed with the engine. When the impulse coupling speed is reduced to between 125 to 145 R.P.M. on the F-4 and F-6 magnetos, and between 75 to 90 R.P.M. on the F-4 Diesel magneto, the coupling automatically comes into operation again. As the throw-in speed is reached, the trailing ends of the engaging pawls which are the heavier, drop down on the magneto member hub when passing over the center of rotation. By so doing the trip ends raise to a position where they will strike lower arm of engaging pawl latch "B", Illust. 40, releasing latch from pawl. Pawl then drops into working position and impulse coupling is again in operation.

Release F-Type Impulse Coupling for Timing Without Timing Hook

A timing hook has been provided on the earlier types of F-type impulse coupling to free the coupling for timing. By lifting the timing hook, the pawl lifts out of engagement and a pawl latch holds it in that position. Magneto can then be turned freely for timing. To engage the impulse coupling, push the timing hook in and turn the impulse coupling until pawl drops.

Release F-Type Impulse Coupling for Timing Without Timing Hook



ILLUST. 41--SHOWS HOW MAIN PAWL CAN BE LIFTED, DISENGAGING THE IMPULSE COUPLING FOR FREE ROTATION DURING TIMING.

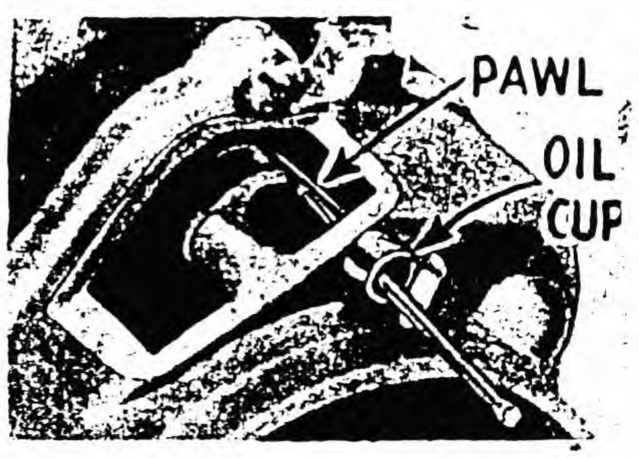

ILLUST. 42--SHOWS HOW LATCH IS TRIPPED, ALLOWING PAWL TO DROP IN OPERATING POSITION.

The timing hook has been removed from the later magnetos and the oil cup position has been changed in the impulse housing to a point where it can be used for a double purpose. First, to furnish an opening for lubricating the impulse coupling and, second, to furnish an opening through which the main pawl may be lifted to allow rotation of the magneto without the impulse action during the timing operation. By manipulating a light finishing nail through the oil cup as shown in Illust. 41 and 42, the pawl may be lifted for free rotation during timing.

By placing the nail in the position shown in Illust. 41 and prying downward on the outer end, the pawl may be lifted and the latch will hold it up. It may be necessary to turn the rotor (or rotate the magneto) to a point just past the trip of the impulse to accomplish the lifting of the pawl. If the pawl is in the low position and the impulse spring is partly wound up, it will be impossible to move it with the nail.

To return the pawl to the operating position, place the nail in the position as shown in Illust. 42 and press down on the outer end of the nail to lift the latch.

Dismantling F-Type Impulse Coupling

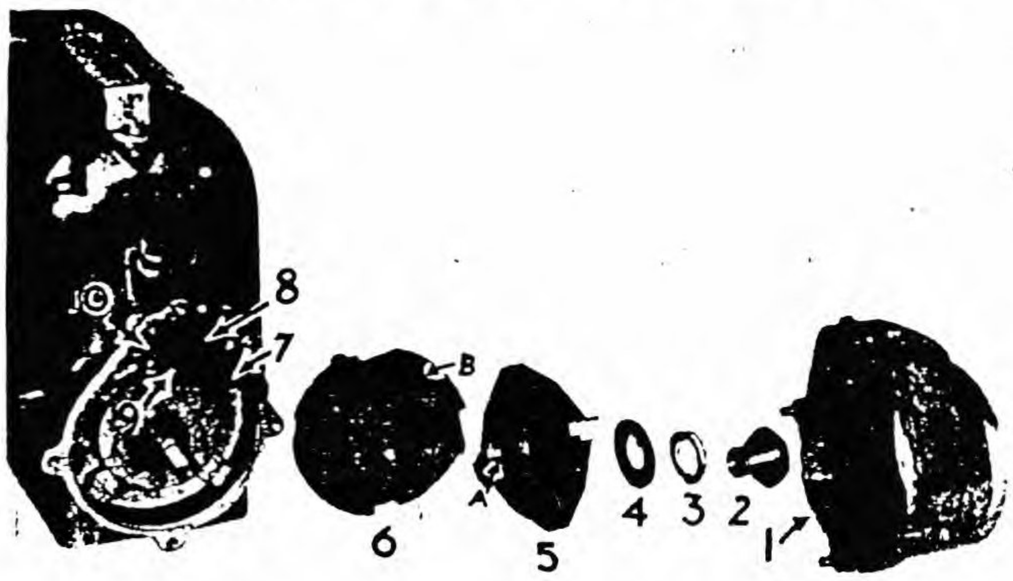

ILLUST. 43--F-TYPE IMPULSE COUPLING DISMANTLED FROM THE MAGNETO.

To remove the coupling member (6) start puller SE-912 in the threads (See Illust. 39, Item 9), then lock the member with pawl (7) and screw the puller until considerable effort is required to turn it. If the impulse has been allowed to stand or operate without sufficient oil, coupling member (6) is likely to be rusted and stuck on the shaft. It may be necessary to use two screw drivers, one from each side between the coupling and the magneto frame, and to hit the puller SE-912 a rather hard blow, at the same time exerting pressure on the screw drivers. Care must be used when this condition exists to remove the member without damaging the threads or the magneto frame.

To separate cam member from magneto member, pull outward until lugs clear, let unwind about one-half turn, and then remove. Drive spring can be easily pried out with a screw driver. In replacing spring, first hook it into position at "B", being sure it will wind in the direction shown. Wind the spring into position, using the right hand to push it gradually down and the left hand to hold the wound coils in place.

When assembling the coupling be sure that the hub of magneto member (6) is clean and well oiled, and if the latch spring (8) is rusty, replace it with a new one. Couplings must be oiled generously with cream separator oil at regular intervals. When the weather is extremely cold, kerosene should be used.

The earlier engaging pawls were held on the pawl pin by cotter pins. Be sure that these cotter pins are tight. If they are loose they will soon wear and drop out. Replace these cotter pins if they show any signs of wear. At present snap rings are used to hold these pawls on. They must be tight on the pawl pins when in place, otherwise they will wear and fall off. This causes a general wreckage of the magneto frame.

How the International E4A Impulse Coupling Works

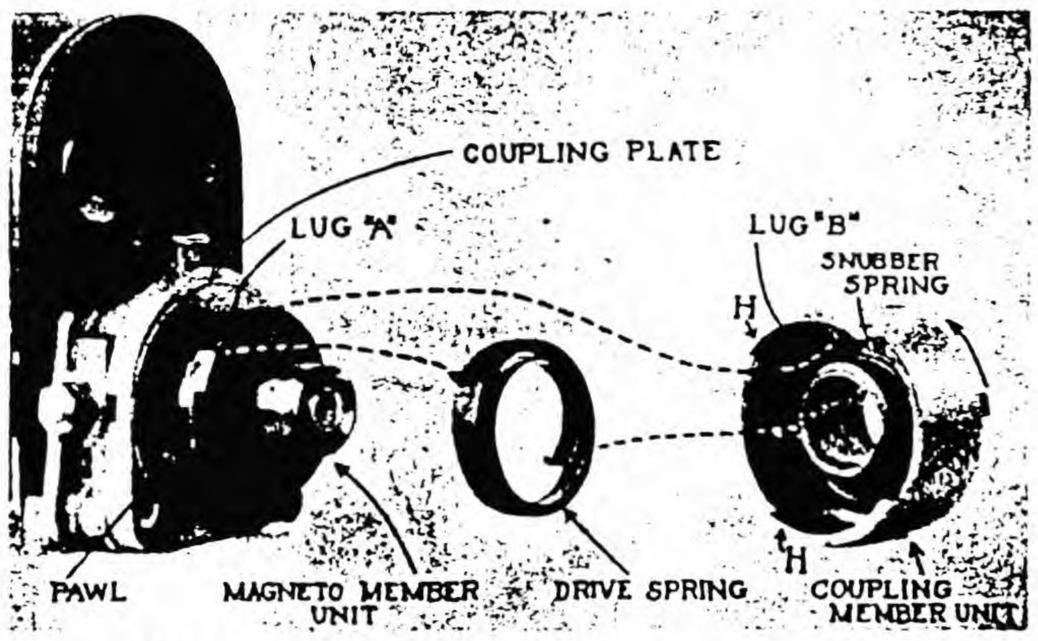

ILLUST. 44--E4A IMPULSE COUPLING PARTIALLY DISMANTLED TO SHOW HOW IT WORKS.

Following is a brief description of how the E4A Impulse Coupling operates: The coupling member unit (Illust. 44) is locked to the magneto drive shaft and always rotates steadily at engine speed. The magneto member unit is keyed to the armature driving end. These two units are connected to the drive spring as indicated in Illust. 44.



ILLUST. 45
PAWL ENGAGED AND ABOUT TO BE TRIPPED BY LUG "H"

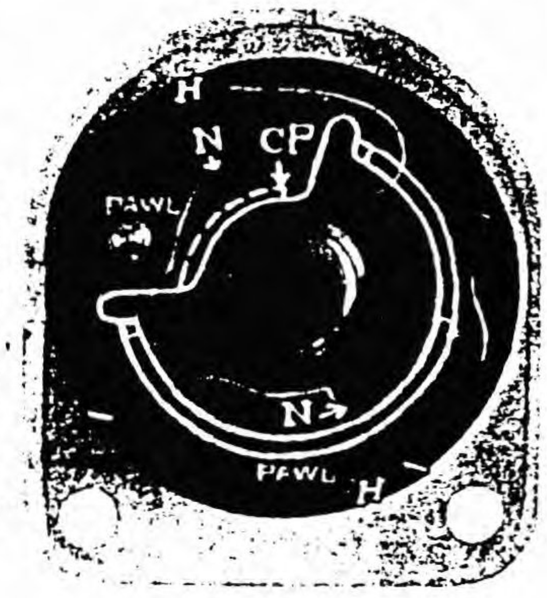

ILLUST. 46
CENTRIFUGAL FORCE HOLDS PAWLS OUT OF ENGAGEMENT AT SPEEDS GREATER THAN 100 R.P.M.

Attached to the back of the magneto member unit are two pawls (Illusts. 44, 45, and 46). When the engine is turning at less than 100 R.P.M., gravity causes the uppermost pawl to catch the coupling plate at "CP", Illusts. 45 and 48, in notch "N", Illust. 45. This prevents the magneto member from turning until lug "H" of the steadily rotating coupling member trips the pawl by hitting its tail as shown in Illust. 45.

INTERNATIONAL E4A TYPE IMPULSE COUPLING

In the meantime, the drive spring has been wound up almost one-quarter revolution. Therefore, when the pawl is tripped, this spring unwinds, hurling the magneto member unit and rotor rapidly forward. Then, in the next one-half revolution, the second pawl comes to the top, catches, is tripped and the magneto armature is again hurled rapidly forward. Tripping of the pawls is timed so as to cause a spark when engine is on dead center or from dead center to 8° after dead center, provided the magneto is properly timed to the engine.

The snubber spring acts as a cushion against the impact of lugs "A" against lugs "B", Illust. 44, after the magneto member unit and rotor have been hurled forward by the drive spring. Cushioning movement of the snubber spring is limited by lug "L" which fits into groove "G", Illust. 53.

When the engine runs at a speed greater than 160 to 180 R.P.M., the centrifugal effect on the pawls is sufficient to hold them firmly against the inside of the two lugs "H" as in Illust. 46, so that notches "N" fail to catch at "CP". All parts of the coupling then rotate as a single unit.

Dismantling E4A Type Coupling

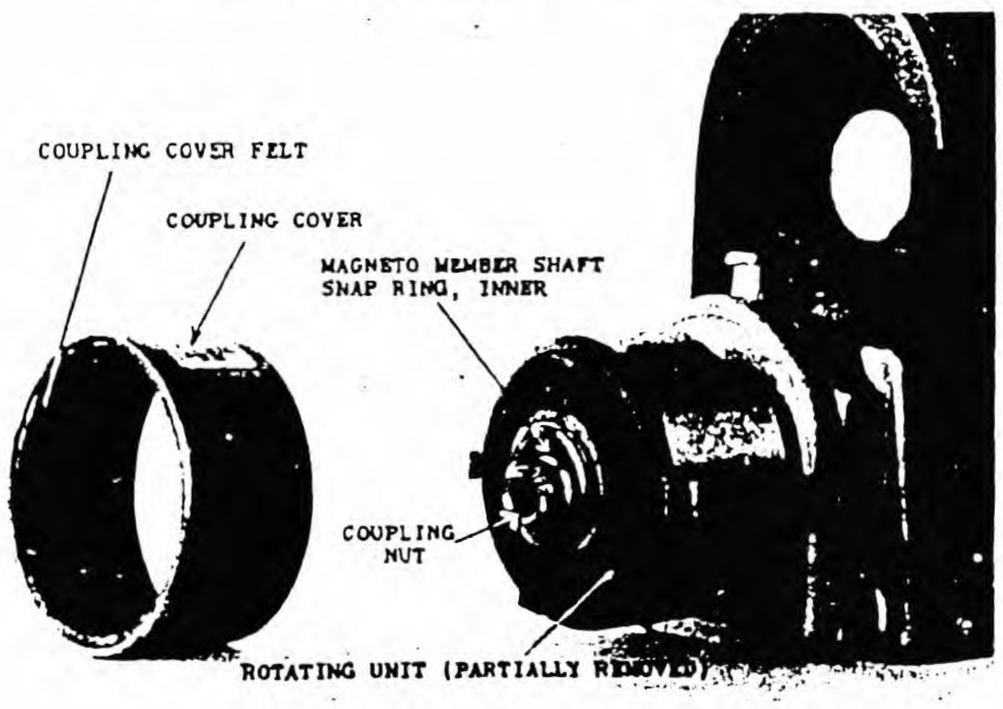

ILLUST. 47--ROTATING UNIT IS PULLED OFF BY UNSCREWING COUPLING UNIT.

1. Release the two cover springs and remove coupling cover Illust. 47. Examine the coupling cover felt. If a new felt is necessary, remove old felt, clean coupling cover of all dirt, oil and grease and shellac new felt in place.

2. Using a 9/16" socket wrench, with a socket having an outside diameter of not more than 25/32", unscrew the coupling nut, Illust. 47, from the rotor driving end. While the nut is being unscrewed, its shoulder will bear against the magneto member shaft snap ring, inner, and will pull off the rotating unit.

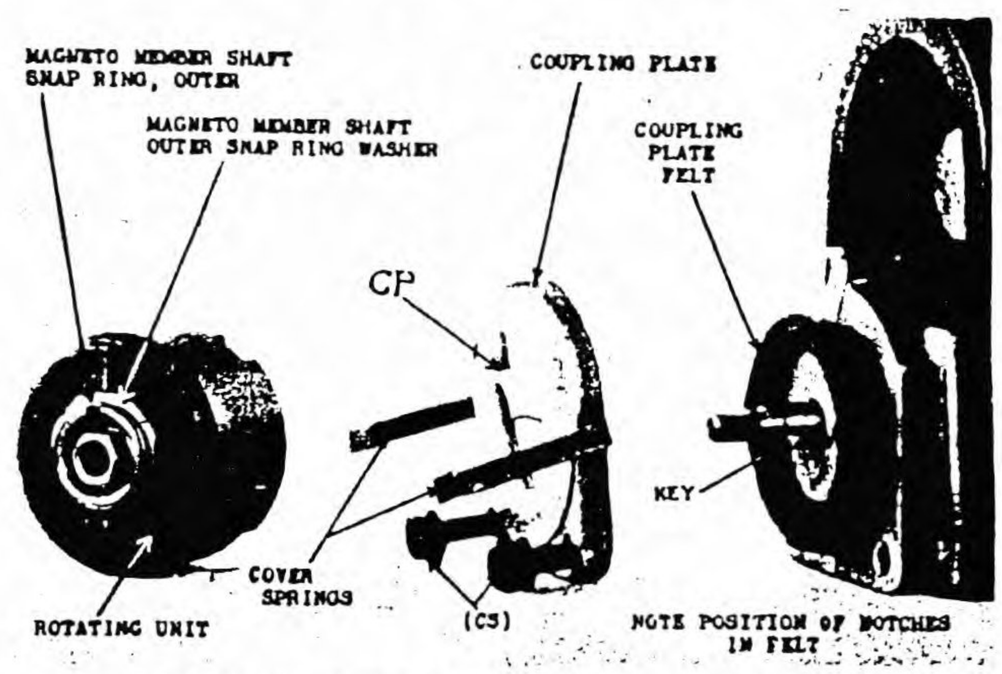

ILLUST. 48--ROTATING UNIT AND COUPLING PLATE REMOVED.

3. Should it be necessary to remove a pawl, this can be done after the pawl pin snap ring has been pried off. (See Illust. 50).

4. To separate the coupling member unit from the magneto member unit (see Illust. 50), first pry off the magneto member shaft snap ring, outer (Illusts. 48 and 49), and remove it and its washer. Place the rotating unit in a vise as shown in Illust. 49, and insert winder SE-783 No. 1. Turn winder clockwise with handle SE-783 No. 4 just enough to release pressure of lugs "A" against lugs "B", Illust. 44, and at same time press upward on the coupling nut as shown in Illust. 49.

When the magneto member has been pushed upward to the height shown, lugs "A" and "B" will clear each other. Carefully permit the drive spring to unwind. In unwinding, the spring will move handle SE-783 No. 4 counterclockwise as indicated in Illust. 49. The magneto member unit and coupling member unit can then be separated.

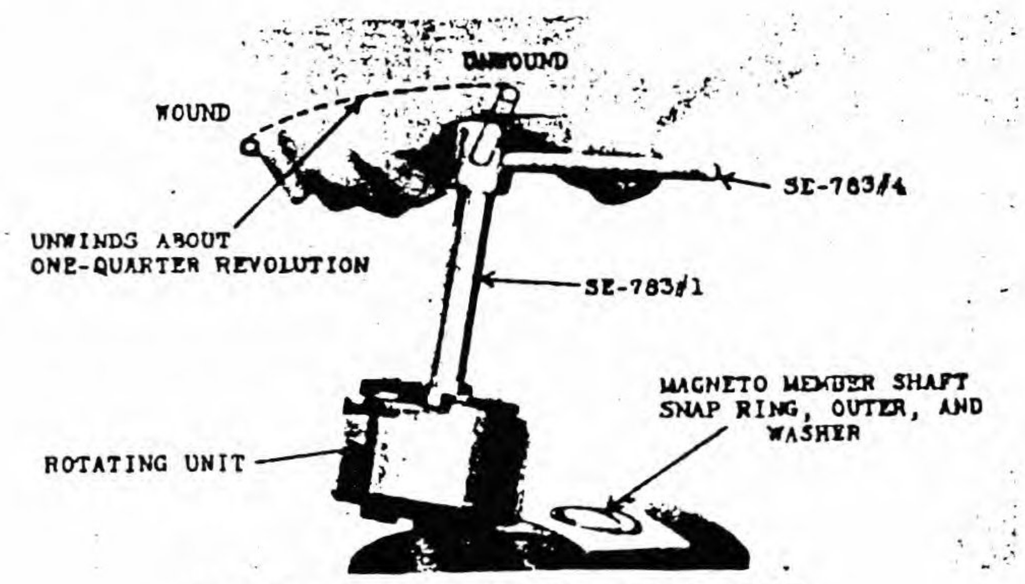

ILLUST. 49--SEPARATING MAGNETO UNIT FROM COUPLING UNIT.

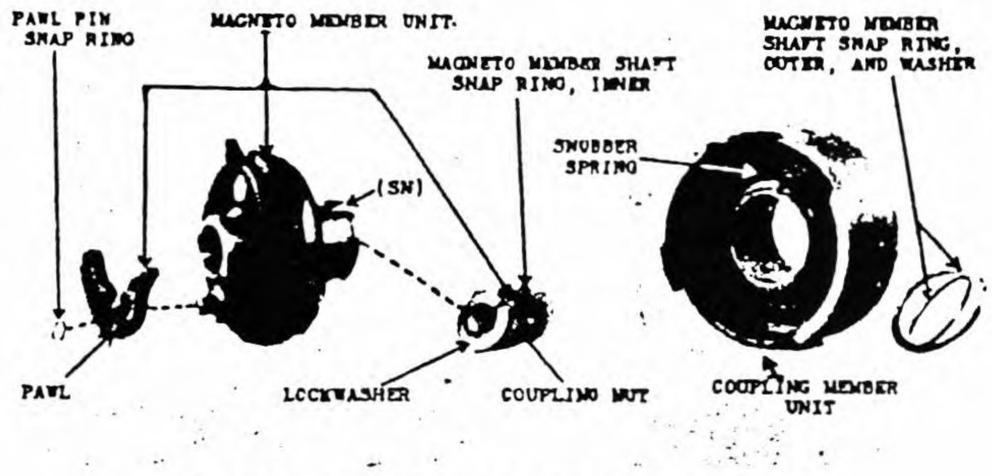

ILLUST. 50--MAGNETO MEMBER UNIT AND COUPLING MEMBER UNIT SEPARATED.

5. To remove the coupling nut, first pry out the magneto shaft snap ring, inner (Illusts. 47 and 50), by inserting a small screw driver in notch "SN". Note there is a special light lockwasher under the nut.

6. When a drive spring is broken, the coupling will fail to impulse and will automatically retard the spark. *To remove a drive spring*, grip winder SE-781 No. 1 in a vise as in Illust. 51. Catch inside hook of drive spring in slot of winder SE-783 No. 2 and by turning the winder clockwise, wrap spring fairly tight around it. Pry up spring with a screw driver applied as shown. Let spring slowly unwind until it assumes the shape and position shown in Illust. 52. It can then be picked up in one's fingers.

7. The coupling member stop ring with the snubber spring (Illust. 53) can be removed by hitting the wide-open end of

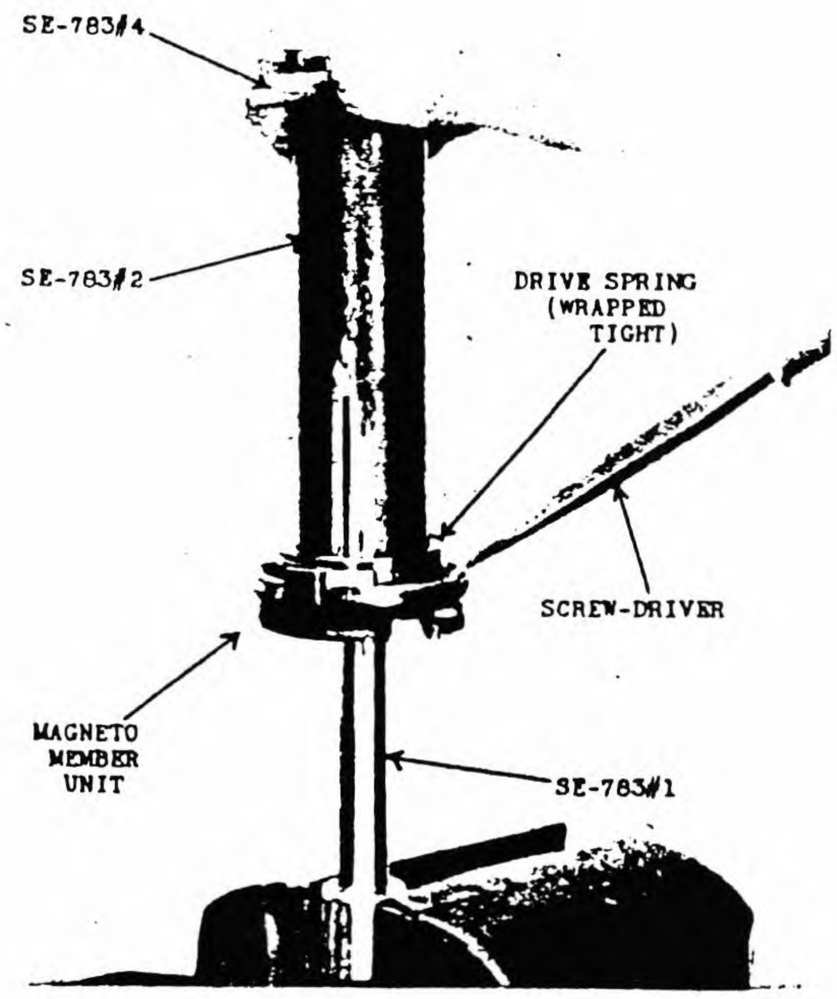

ILLUST. 51--REMOVING DRIVE SPRING.

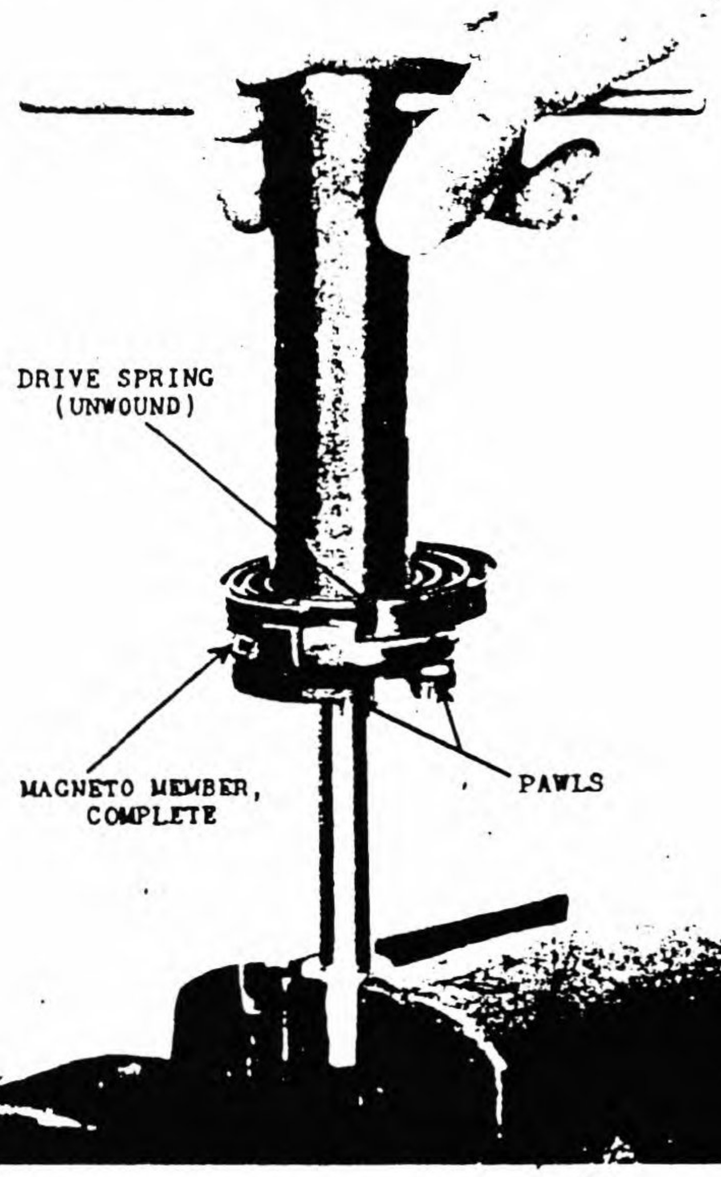

ILLUST. 52--DRIVE SPRING RELEASED.

the coupling member, complete, sharply against a smooth board.

8. A broken snubber ring will make itself evident by a change in the sound of the impulse -- a single thud louder than usual, at each trip of the coupling. It will also advance the time at which the coupling trips.

To remove the snubber spring from the coupling member stop ring, clamp the assembly in wood blocks SE-783 No. 5, Illust. 54. Catch the inside hook of the spring in winder SE-783 No. 2 as shown in Illust. 54, and proceed as instructed to remove drive spring, operation 6.

A study of the preceding illustrations and operations will reveal the simplest, safest and most efficient way to clean, inspect or remove any particular part of the coupling. Before reassembling the coupling, thoroughly clean and inspect all parts. In removing drive and snubber springs, care should be taken not to scratch or nick them as this may weaken them so as to result in breakage.

Reassembling the Coupling

Checking Snubber Spring Overlap:

Length of snubber springs will vary slightly, so that frequently the 1/8" maximum allowable overlap, given in Illust. 53, must be adjusted by means of

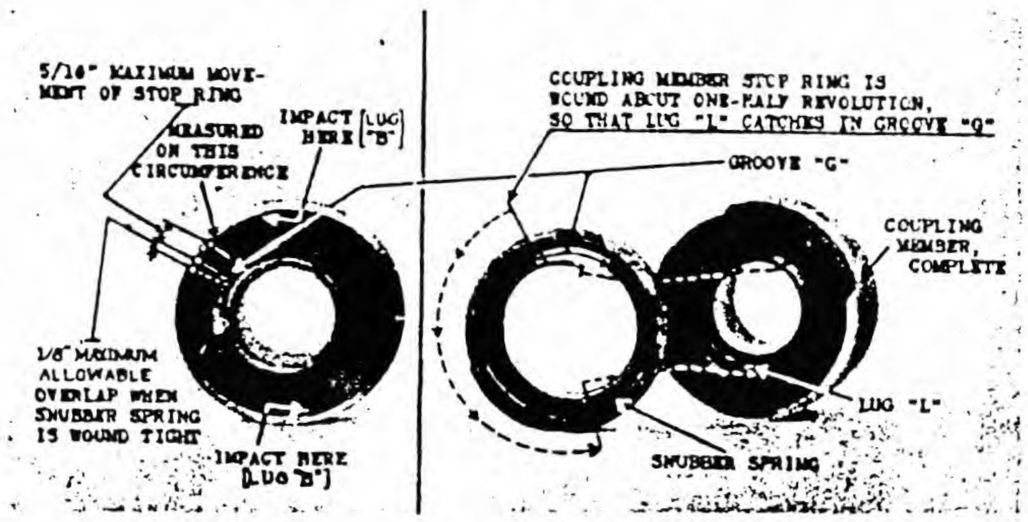

ILLUST. 53--COUPLING MEMBER UNIT. NOTE THAT SNUBBER SPRING IS WOUND THROUGH ABOUT ONE-HALF REVOLUTION.

the snubber spring felt in Illust. 58. Too much overlap will result in excessive coupling oscillation (or vibration) which may cause irregular impulsing at slow speeds. Overlap must be checked as follows:

(a) Assemble the coupling member stop ring, without the snubber ring, so that lug "L" fits into groove "G",Illust. 53. Using winder SE-783 No. 3, turn the stop ring counterclockwise as far as it will go. (See Illust. 53). Note that there is a mark "M" (Illust. 57) on SE-783 No. 3. Using a pencil, extend a radial line from this mark cut across the edge of the coupling member. The pencil line must be plainly visible.

(b) Remove coupling ring and assemble the snubber spring into it by reversing operation 8.

(c) Bend a piece of heavy wire or wire solder into a loop as shown in Illust. 56 and place it inside the coupling member. The idea is to keep lug "L" from catching in groove "G", Illust. 53.

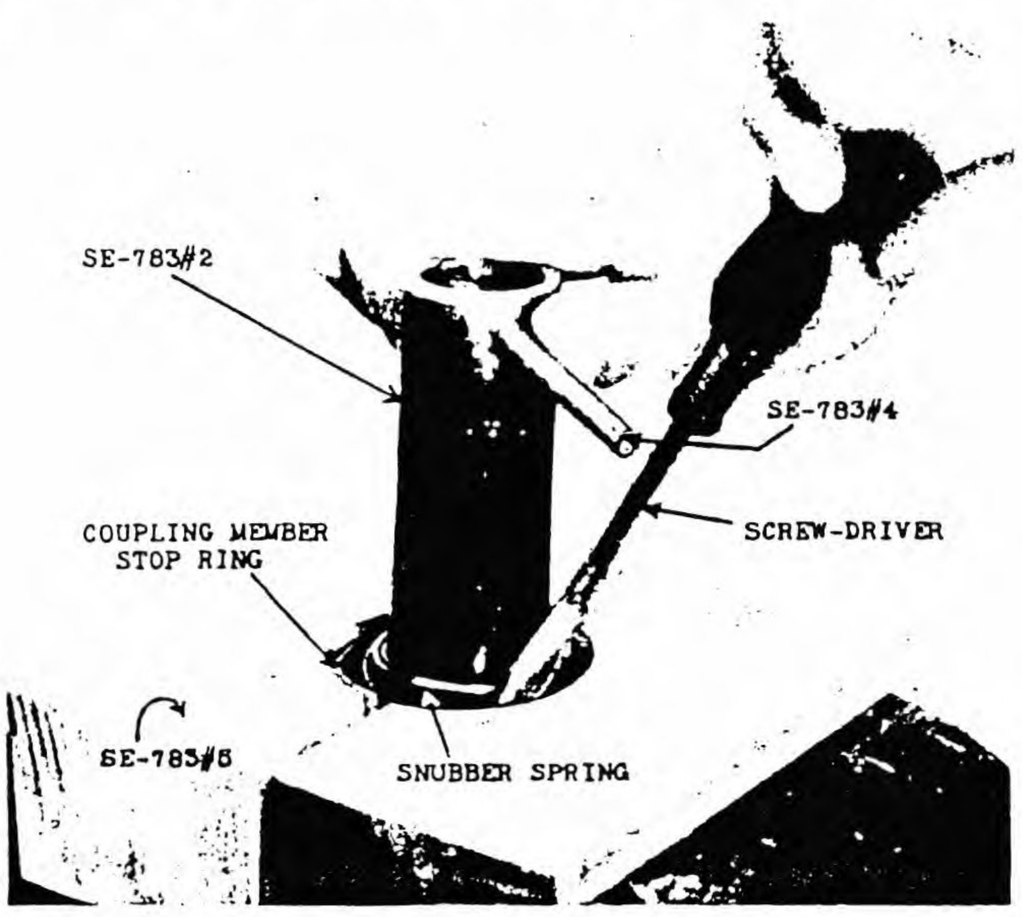

ILLUST. 54--REMOVING SNUBBER SPRING FROM COUPLING MEMBER STOP RING.

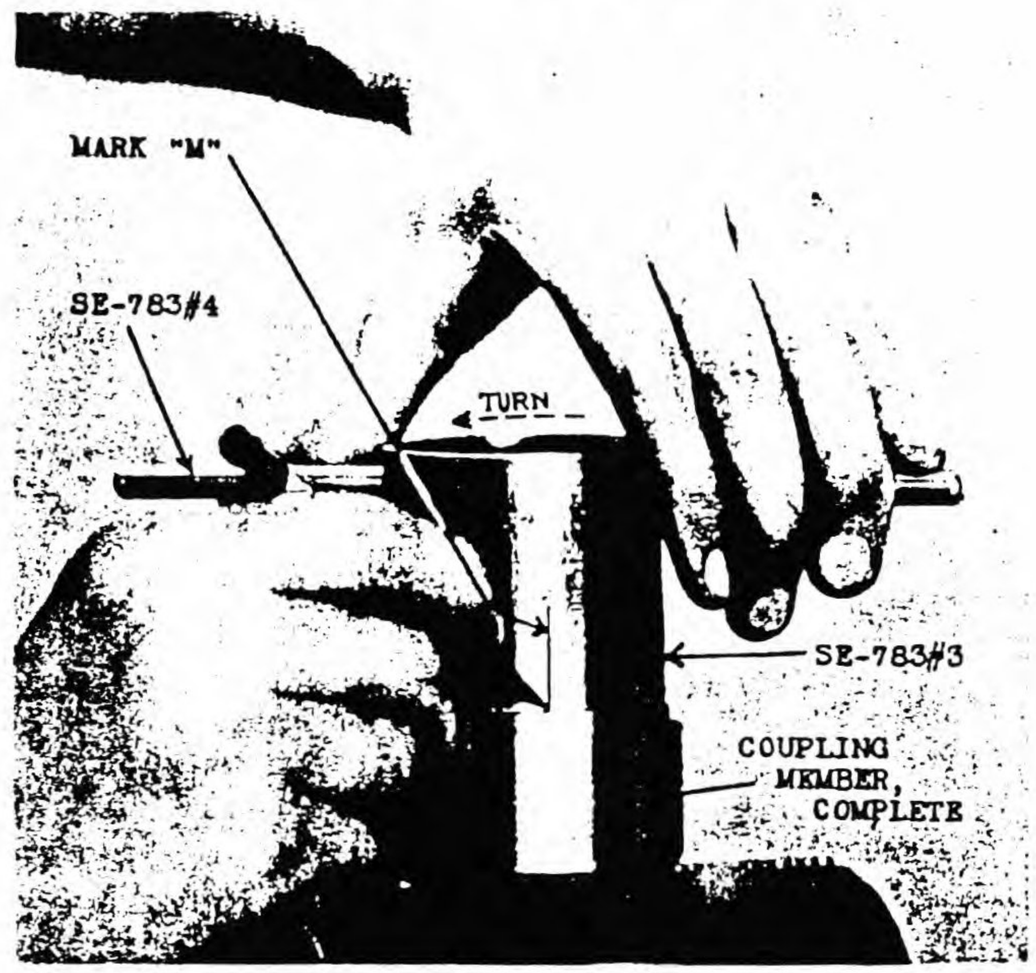

ILLUST. 55--DETERMINING SNUBBER SPRING OVERLAP.

(d) Assemble the coupling stop ring with the snubber spring, into the coupling member. Again using SE-783 No. 3, start with mark "M", turned to the opposite side of the coupling from the pencil mark (Illust. 57), and wind the snubber spring counterclockwise until wrapped tight. Mark "M" on SE-783 No. 3 should then be 0 to 1/8" beyond the pencil line, in the direction that the winder was turned, measured as instructed in Illust. 57. If this measurement is within the specified limits, the snubber spring is of proper length and can be assembled without the use of felt.

When mark "M" fails to turn as far as the pencil mark, the spring is too short for the assembly being tested and must not be used. Assemble another spring and again check overlap.

When mark "M" turns beyond the 1/8" limit, remove snubber spring from coup-

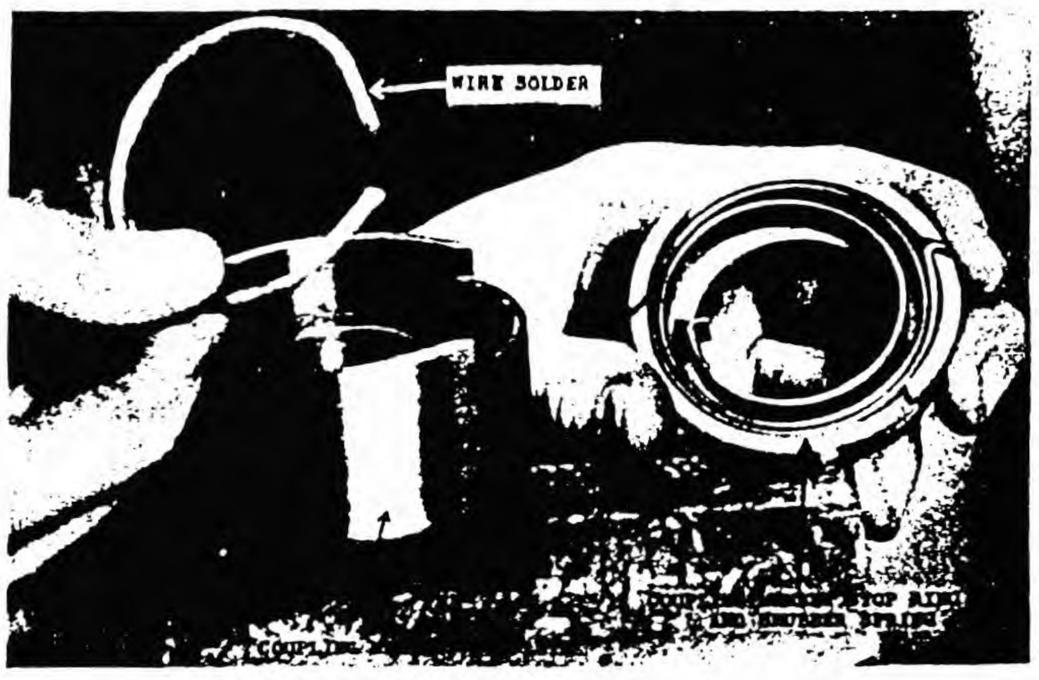

ILLUST. 56--DETERMINING SNUBBER SPRING OVERLAP.

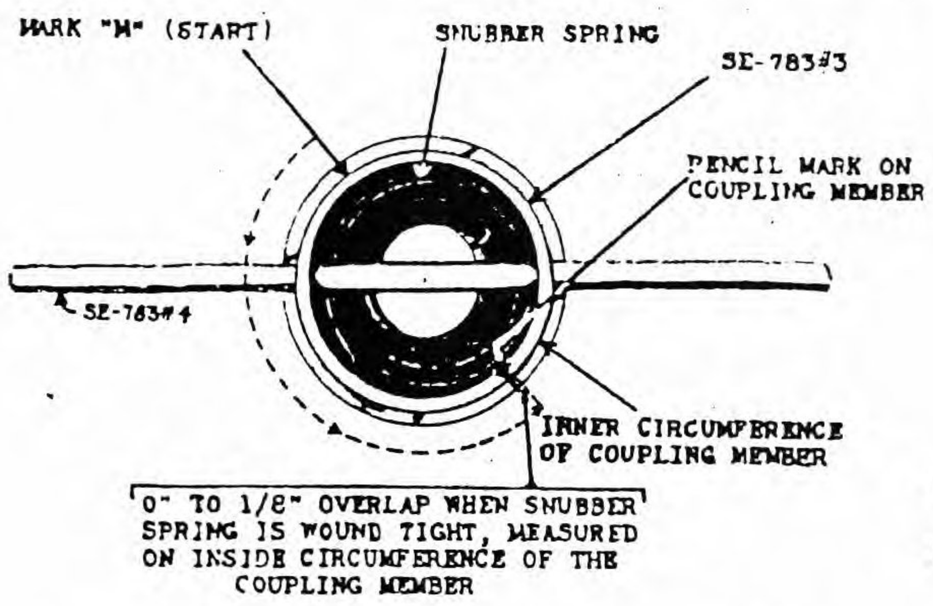

ILLUST. 57--FINAL OPERATION IN DETERMINING SNUBBER SPRING OVERLAP.

ling member stop ring and insert a strip of felt as shown in Illust. 58. Then repeat operation (D). If mark "M" then fails to turn as far as pencil mark, cut off a little of the felt and remeasure overlap. Repeat this procedure as often as necessary until desired 0 to 1/8" overlap is obtained. Then shellac felt to spring at several places as indicated in Illust. 58.

Winding and testing coupling: In reversing operation 7, remove the wire loop (Illust. 56) from the coupling member. Assemble the coupling member stop ring with the snubber spring (and felt if required), being sure to wind the spring counterclockwise with SE-783 No. 3 until lug "L" catches in groove "G" (Illust. 53). Reverse operations 6 and 5. The outside hooks of both the snubber spring and the drive spring must be all the way down in their retaining slots and the coil of the springs must be pushed down evenly.

In reversing operation 4, be sure to wind the magneto member clockwise as indicated in Illust. 49. This winding must be done with tne magneto member pushed upward as in the illustration.

After reassembling magneto member shaft snap ring, outer, and washer, grip rotating unit in vise as in Illust. 49. Insert winder SE-783 No. 1 and turn magneto member unit clockwise as far as it will go. Release it. The magneto member unit should instantly snap back to its original position, rebounding slightly on account of the snubber spring action. If the performance is satisfactory, reverse operation 3: immerse the rotating unit in cream separator oil, let excess oil drip off, and then reassemble coupling onto magneto.

When the coupling is impulsing normally with the cover off, the line mark on the coupling member unit should lie somewhere between the two timing marks

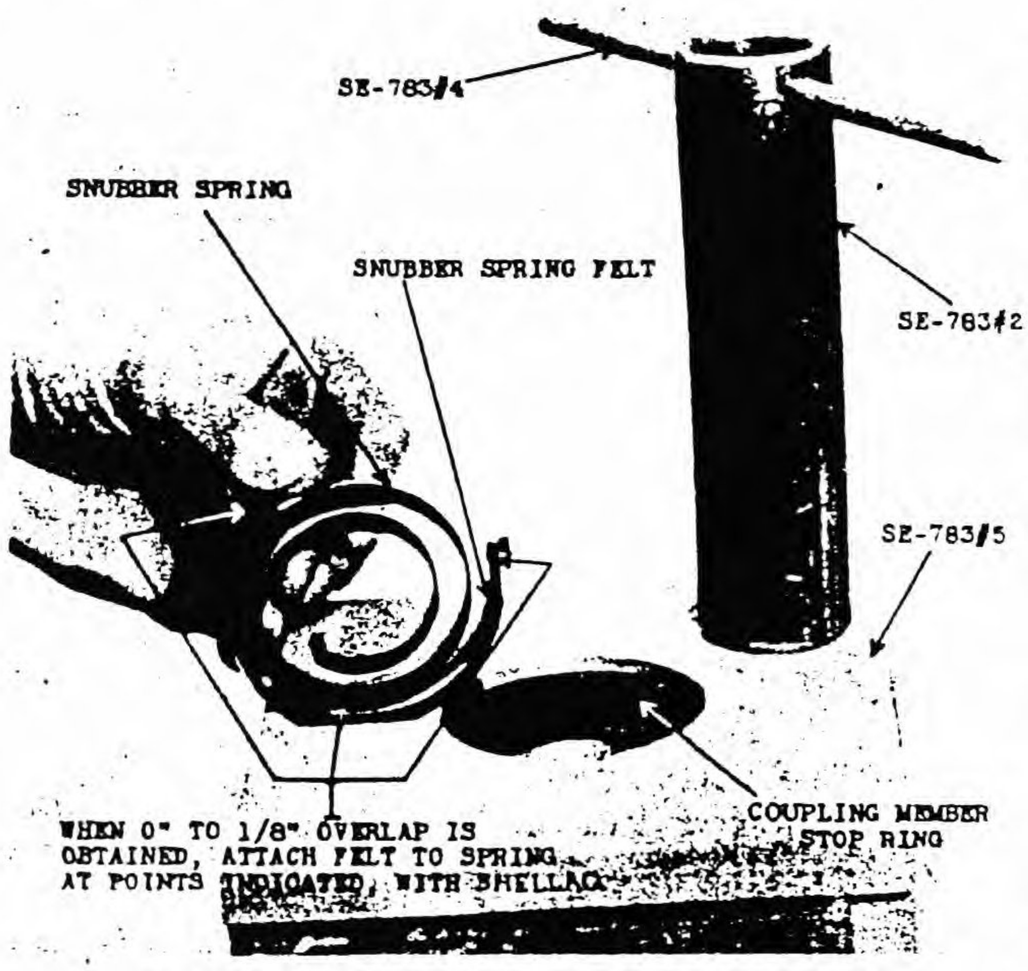

ILLUST. 58--ASSEMBLING SNUBBER SPRING FELT WHEN SNUBBER SPRING OVERLAP EXCEEDS 1/8".

on the coupling plate at the exact time of tripping. Before reassembling the magneto on the tractor, check this timing to verify the correctness of the coupling assembly. A coupling plate (Illust. 48) that is assembled eccentric with respect to the rotating unit may cause the pawls to catch and fail to trip.

When timing the magneto to the engine, unfasten the coupling cover (Illust. 47) and disengage the coupling by pressing down with one finger on the tail of the pawl that is on top, thus preventing this pawl from catching at "CP", Illusts. 45 and 46.

In regard to proper working and long life of this coupling, too much emphasis cannot be placed on keeping the coupling cover in place except when oiling. Emphasize strongly also that a good grade of cream separator oil or its equivalent must be squirted liberally into the coupling once a week. This forcible lubrication is necessary to insure that the bearing surface between the coupling member unit (Illust. 44) and the magneto member unit receives sufficient oil.

Rust, dirt, gummy lubricant or lack of proper lubrication is always sure to cause sluggish or irregular coupling action. A coupling that is working properly should engage uniformly up to a speed of 100 R.P.M. and should cut out completely at a speed of 180 R.P.M. or less. If the coupling will not engage and disengage at these speeds, clean thoroughly and lubricate with cream separator oil.