INTERNATIONAL H-4 MAGNETO

International H-4 Magneto—General

The International H-4 magneto features a completely enclosed breaker chamber, a starting impulse coupling and an Alnico rotor magnet that should never require remagnetising. The exterior is extremely clean and all possible dirt-catching points have been eliminated. The flange is mounted to a drive bracket which is connected to the front plate of the engine. All shimming and lining up of various bolt holes when coupling magneto to engine is eliminated. Fine adjustment of timing is accomplished by rotating magneto in slotted holes in flanges of bracket and magneto. The magneto is driven through the impulse coupling which has a 150 R.P.M. missing speed.

Designed for operation with 4-cylinder engines, the entire mechanism is fully enclosed and protected against entrance of dirt, dust and moisture. The condenser and coil are located underneath a plastic cover. The magnet is the rotating type, revolving between ends of pole pieces. Near the end of magnet rotor shaft is the cam which operates breaker mechanism; the breaker mechanism is sealed from coil and distributor compartment. The flat on the extreme end of magnet rotor shaft drives reduction gears which drive distributor arm. The distributor cap fits only one way and the No. 1 leadout is plainly marked.

The International H-4 magneto is designed for use on all new line units, including the A, B, H, M, "4" Series, "6" Series, "9" Series and "14" Series (Diesels included) and No. 62 Harvester Thresher Engine.

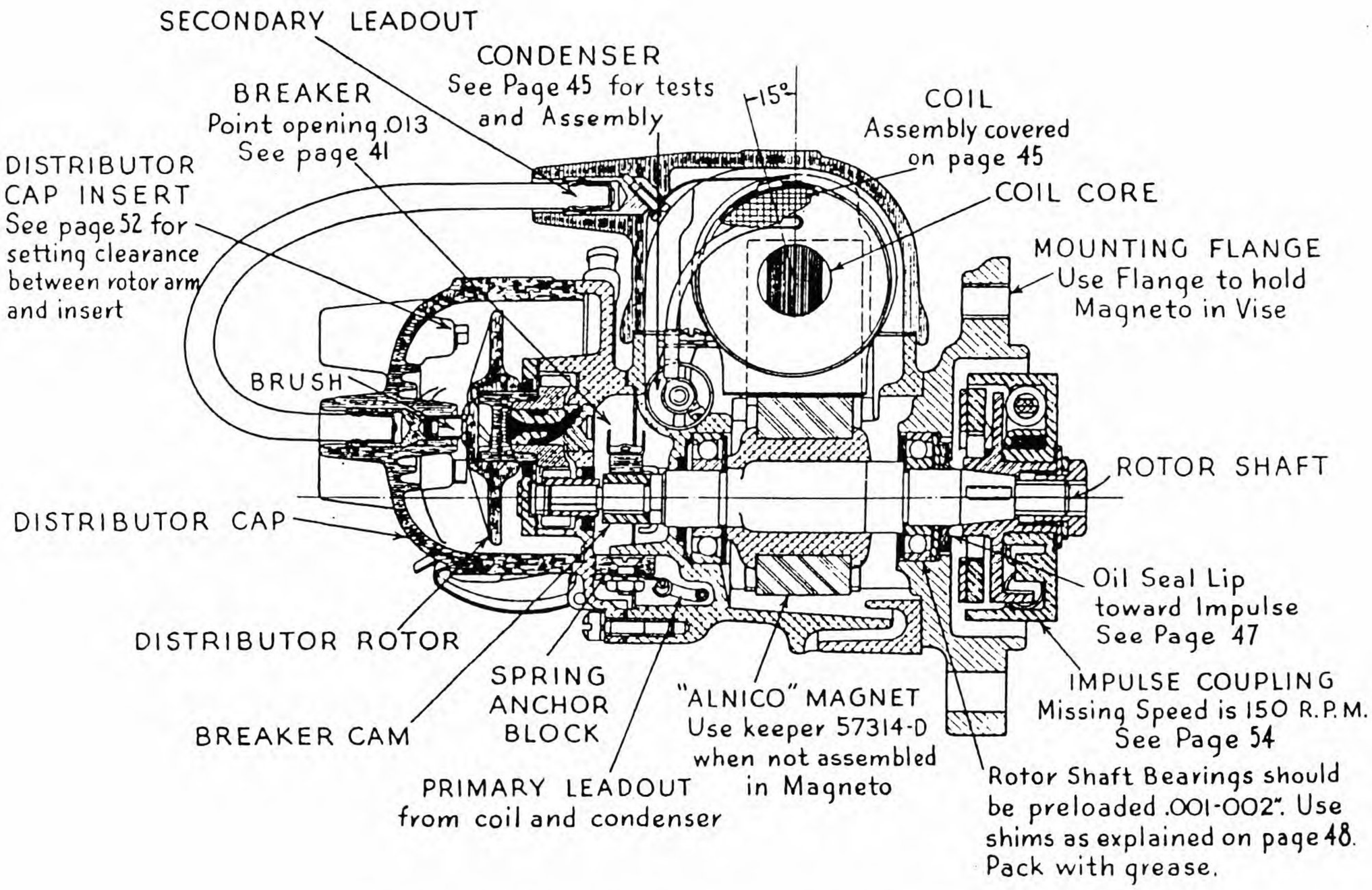

ILLUST. 77--CROSS SECTIONAL VIEW OF INTERNATIONAL H-4 MAGNETO.

Magnetic Circuit in the International H-4 Magneto

The H–4 magnetic cirucit differs from the F-4 and F-6 magnetic circuit (page 5) in that the magnet is part of the rotor and is the rotating part of the magneto.



ILLUST. 78--ARROWS INDICATE THE PATH OF MAGNETIC LINES OF FORCE BETWEEN THE POLES OF ROTOR MAGNET.

Illustration 78 shows the H-4 magnet and the natural path taken by the lines of magnetic force; they are identical to those found around a compass needle.

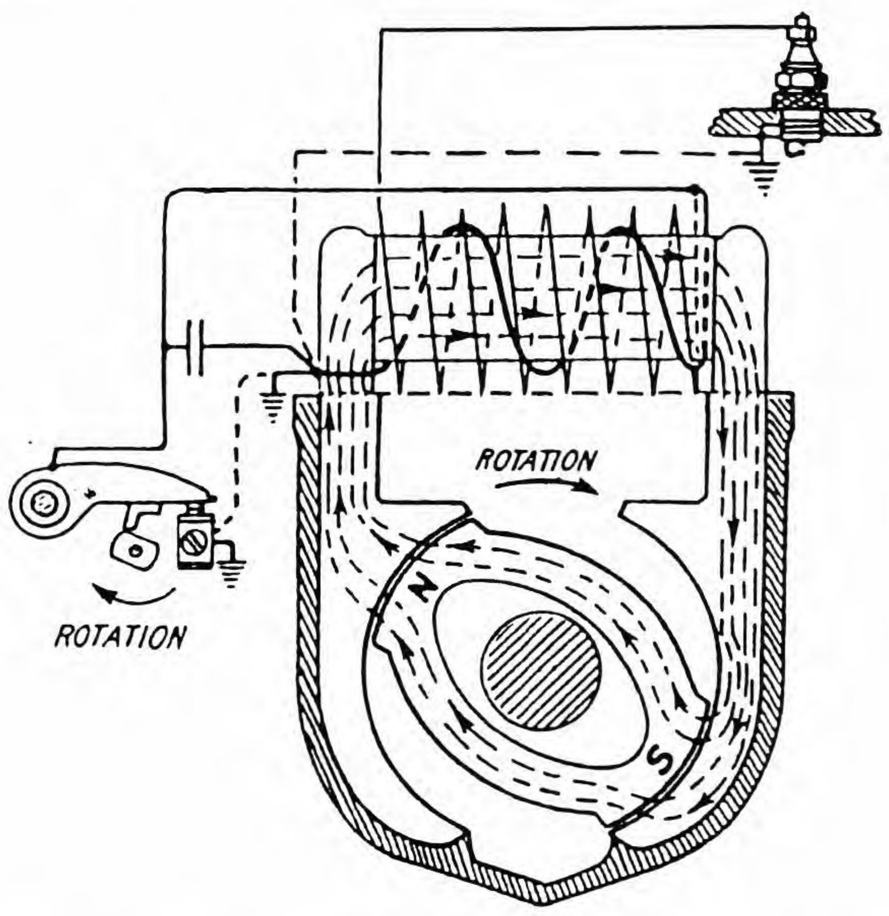

ILLUST. 79--ARROWS INDICATE THE PATH OF MAGNETIC LINES OF FORCE THROUGH POLE PIECES AND THE CORE OF H-4 MAGNETO.

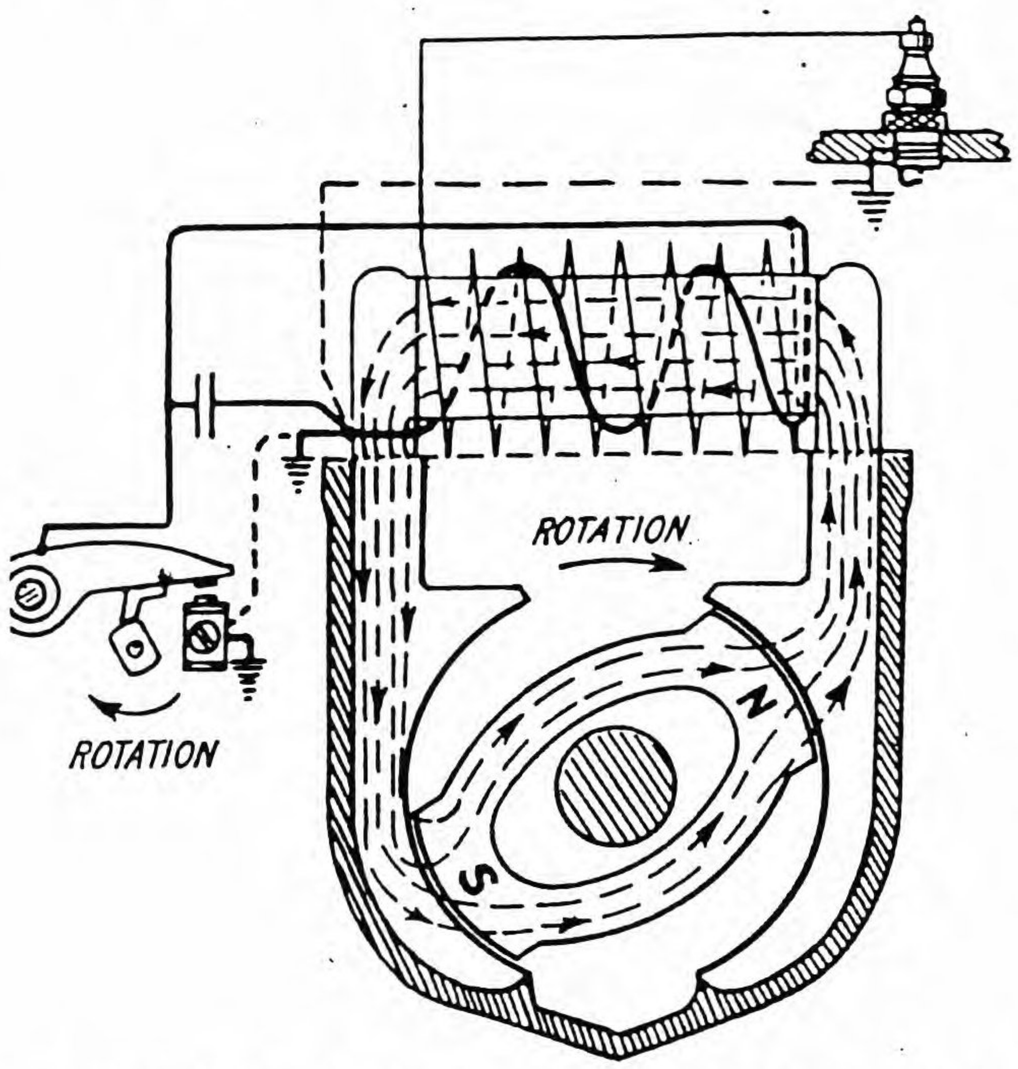

ILLUST. 80--ARROWS INDICATE THE PATH OF MAGNETIC LINES OF FORCE THROUGH POLE PIECES AND COIL CORE OF H-4 MAGNETO WITH ROTOR MAGNET TURNED 90° FROM THE POSITION IN ILLUST. 2. NOTE CHANGE IN DIRECTION OF ARROWS THROUGH COIL CORE.

Illustration 79 shows how the above natural lines of magnetic force have been changed to pass through the laminated pole pieces cast into the magneto frame and then through the laminated coil core. Magnetic lines of force will always pass through such an iron or soft steel path rather than pass from N to S through the air.

When the magnet has rotated clockwise to the position in Illust. 80, the path of magnetic lines of force through the coil core is the same but in the opposite direction. This means that every time the "N" end of the magnet passes from one pole piece to the other pole piece, there is a complete reversal of the direction of the magnetic lines of force.

Illust. 81 shows the position of the magnet when the breaker points start to open and when a spark occurs across the gap of the spark plug, that is when the magnetic center line of magnet is 6 degrees beyond vertical center line.

As magneto rotor moves from the position shown in Illust. 79 to the position in Illust. 80, the magnetic lines of force in the coil core are reversed. With this method of producing the reversal of force clearly understood, refer to pages 6 and 7 for the hydraulic analogy to complete the theory of the H-4 magneto operation.

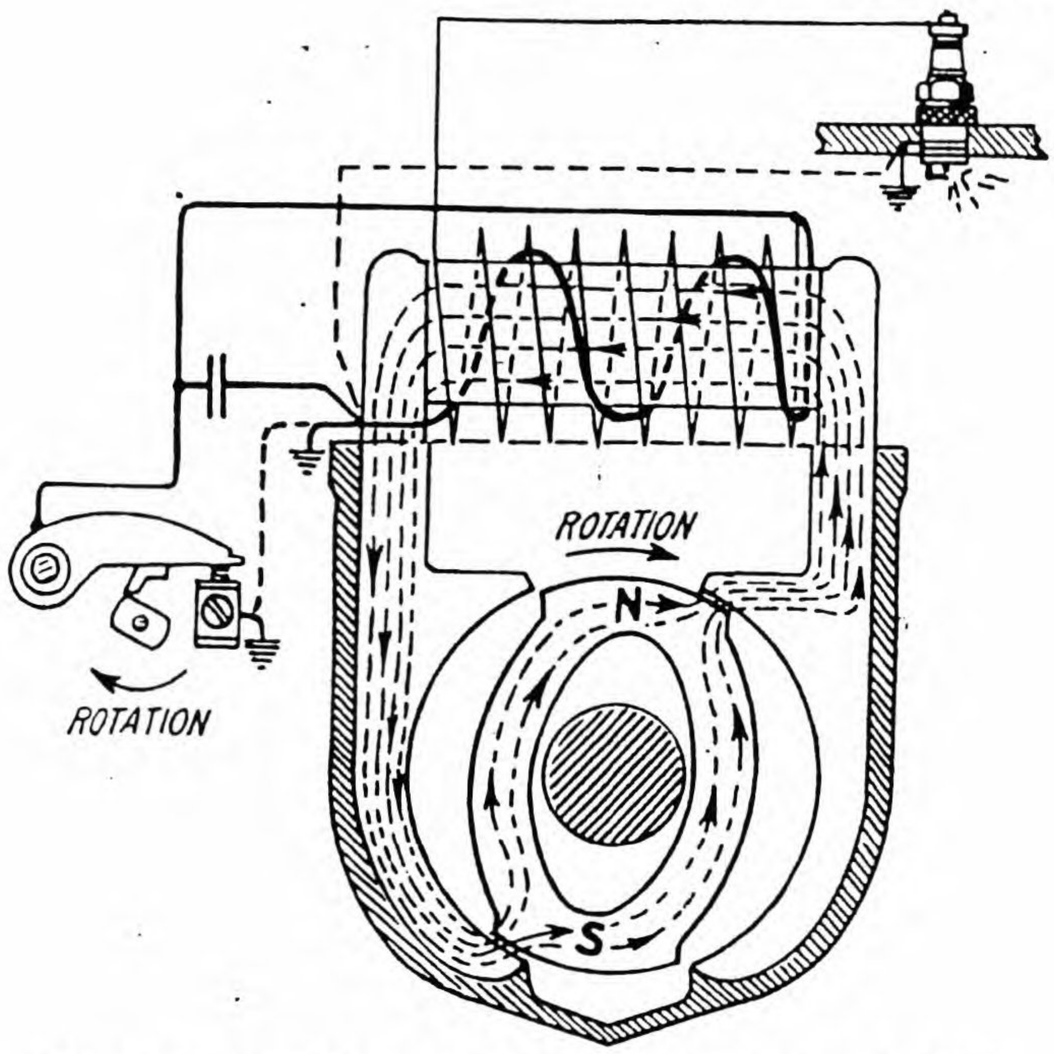

ILLUST. 81--INDICATES POSITION OF ROTOR MAGNET AT TIME SPARK JUMPS THE AIR GAP AT SPARK PLUG; BREAKER POINTS ARE JUST OPENING.

Distributor Cap

To remove distributor cap push distributor cap springs out of cap recesses and pull off cap. The lead from secondary of coil plugs into central insert socket and the cables to spark plugs fits in outside sockets starting with No. 1 marked on the face of the cap. Firing order on all four cylinder IHC engines and Continental engines used on Harvester Threshers is 1-3-4-2 . See wiring plan for each motor in their respective instruction books.

The carbon brush 4, Illust. 83, in the central socket contacts the monel metal strip (2) of the magneto rotor (1). The brush is attached to a spring; the assembly can be pulled from its socket if replacement is required. All grease should be removed from the monel strip to get a good contact.

The distributor cap should be free of dust or dirt, inside and out, before reassembling to magneto. The two ventilating holes (Item 2, Illust. 82) should be open at all times. For adjustment of the distributor rotor arm with respect to inserts (3), Illust. 83, refer to Page 52 and Illustrations 108 and 109. The cap fits only one way; the ventilating holes are always on the bottom side.

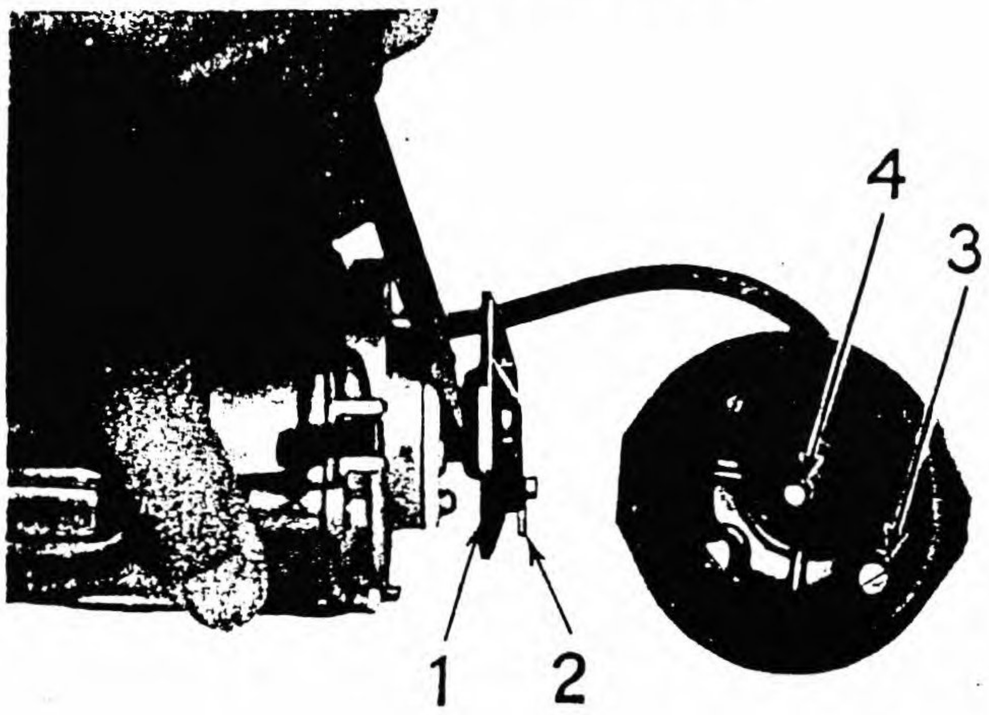

ILLUST. 83--METHOD OF REMOVING DISTRIBUTOR ROTOR FROM ITS SPINDLE. 1--DISTRIBUTOR ROTOR. 2--MONEL DISTRIBUTOR ARM. 3--DISTRIBUTOR CAP INSERTS. 4--SECONDARY CARBON BRUSH.

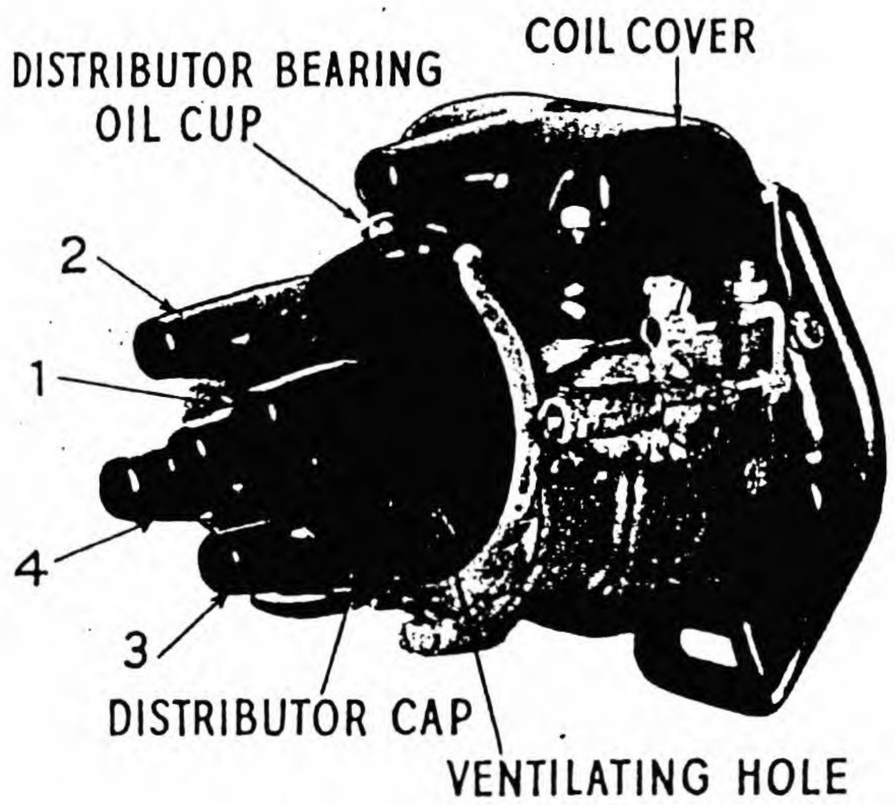

ILLUST. 82--H-4 MAGNETO COMPLETE WITH BODEN WIRE TYPE OF GROUNDING SWITCH.

Breaker Points

The entire breaker mechanism for the H-4 magneto is in its own separate internal compartment, thoroughly sealed against dirt and moisture. This makes it possible to thoroughly grease the mechanism without the usual danger of grit working into the lubrication, causing an abrasive action on the working parts.

Inspection of Breaker Points

To gain access to the breaker mechanism, remove the distributor cap (Illust. 82), distributor rotor, and distributor body. The distributor rotor fits tight on the spindle and should be removed (Illust. 83) with a screw driver in back of the rotor hub. Bakelite rotor is fragile and should be handled with care. Distrib-

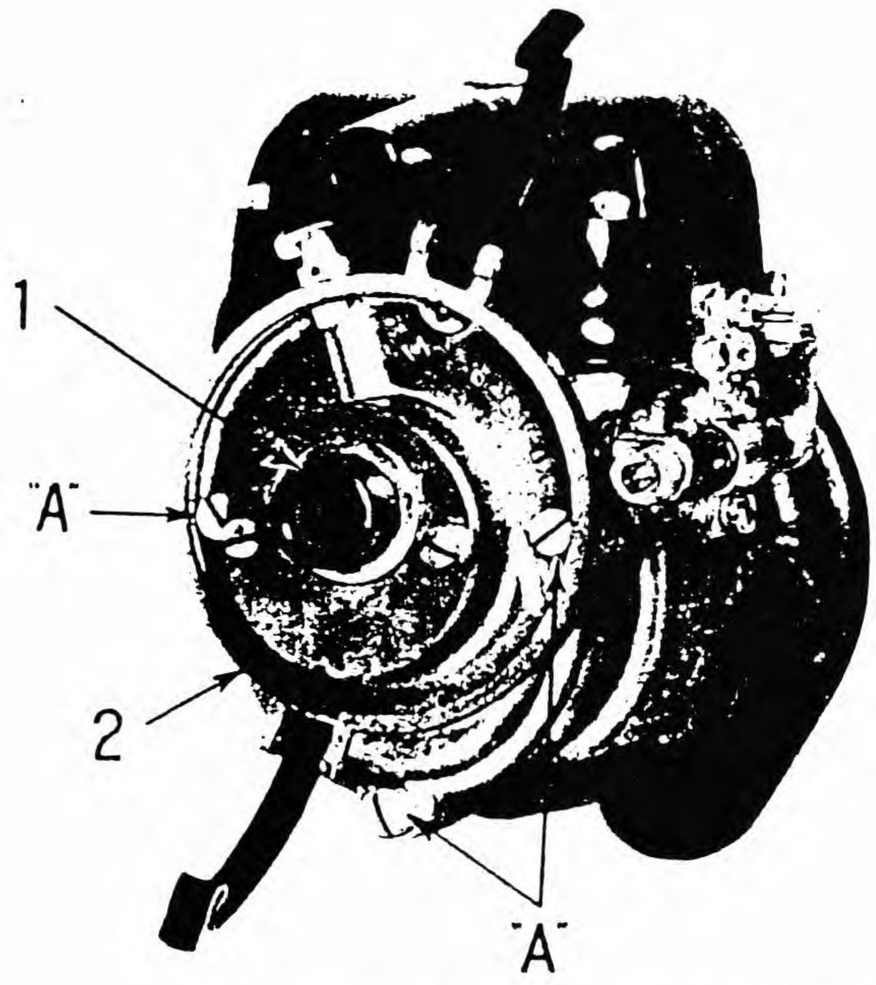

ILLUST. 84--H-4 MAGNETO WITH DISTRIBUTOR CAP AND DISTRIBUTOR ROTOR REMOVED. "A", SCREWS HOLDING DISTRIBUTOR BODY TO MAGNETO FRAME. 1--ROTOR SPINDLE. 2--DISTRIBUTOR BODY.

utor body is removed by loosening the screws "A" (Illust. 84). These screws should not be removed from the distriubtor body (2).

Now the breaker arm assembly (6) and spring anchor block (5), (Illust. 85) can readily be inspected and removed for any reworking required. As shown in Illust.

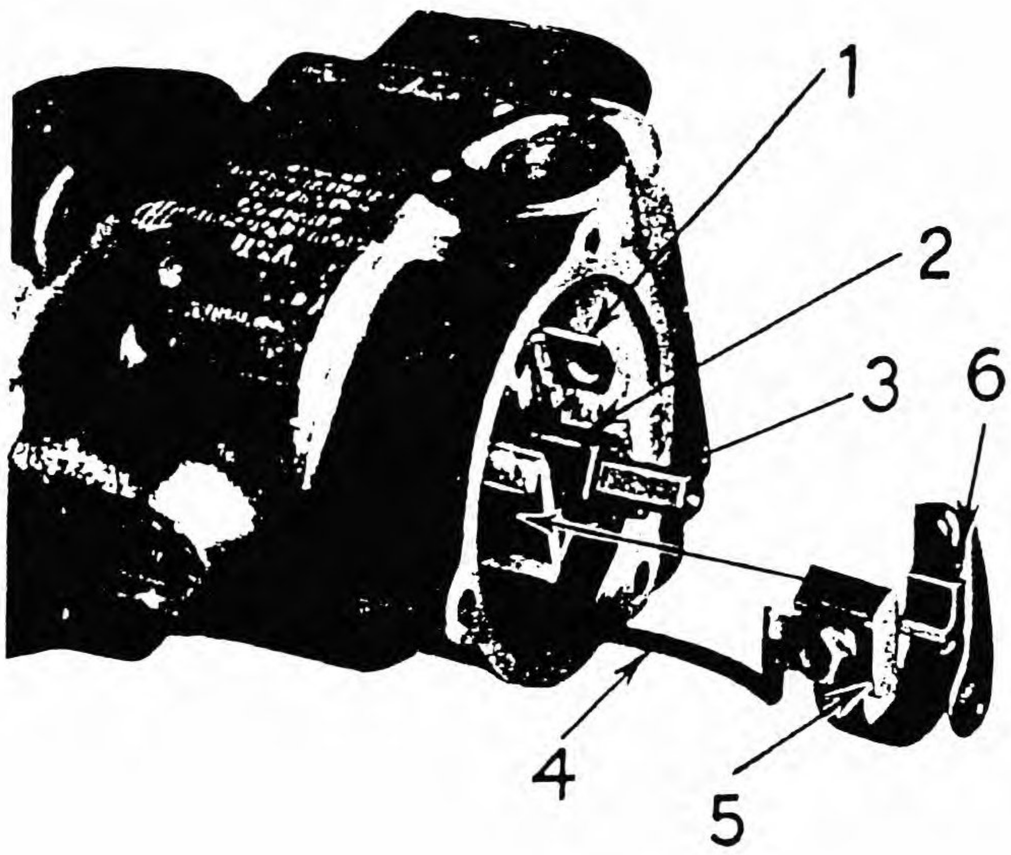

ILLUST. 85--H-4 MAGNETO WITH BREAKER ARM REMOVED (SEE ILLUST. 88.) 1--STATIONARY POINT. 2--BREAKER CAM, 3--"D" SHAPED END OF ROTOR SHAFT. 4--PRIMARY LEAD-OUT WIRE. 5--SPRING ANCHOR BLOCK. 6--BREAKER ARM ASSEMBLY.

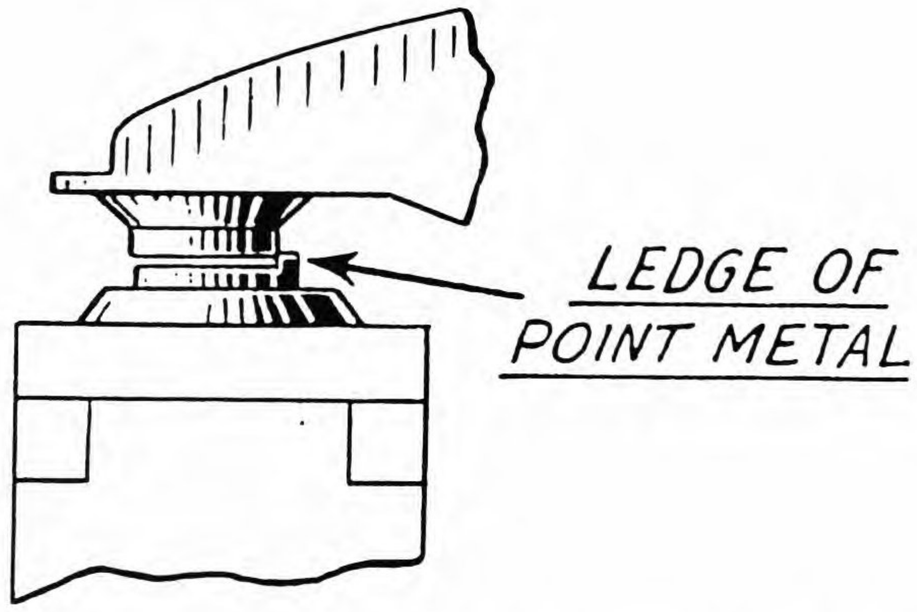

ILLUST. 86--LEDGE OF POINT METAL CAUSES A SLOW BREAK AND POOR PERFORMANCE.

86 a ledge of point metal running up to to the side of the companion point causes a slow break and a weak spark and poor performance. If points are not worn down they may be re-dressed as shown in Illust. 88, but if excessive wear has occured, replace both stationary point and breaker arm.

At this same time examine the inside of the breaker housing for oiliness or grease. If oil has been leaking into the breaker housing the grease being used on the breaker arm in the distributor gear case is too thin. Remember that a dirty or oily breaker chamber means excessive breaker point wear. Keep the breaker chamber clean at all times.

Another possibility is that excessive lubricant is being injected into the distributor gear oil cup, or the felt seal, (Illust. 90) is not functioning properly. The replacement of felt seals is covered on Page 52.

Adjusting Breaker Point

The point opening (1) should be .013" when rubbing block (2), Illust. 89, is on high point of cam (6). A gauge of this thickness is furnished with each tractor or power unit. Remove distributor cap, distributor rotor, (Illust. 83) and distributor body. Turn rotor until rubbing block (2) is on high point of cam (6). Loosen screw (8) in stationary point (7) and tap until gauge will slip snugly in opening. After adjustment be sure to retighten screw. When installing distributor body, be sure the pinion gear hub (5) which has a flat spot (Illust. 90) lines up with flat spot on the rotor shaft (6).

If breaker points are adjusted while magneto is mounted on engine, see section on timing of the magneto before reassembling distributor body.

INTERNATIONAL H-4 MAGNETO

Assembling Breaker Mechanism in Housing: Greasing Instructions

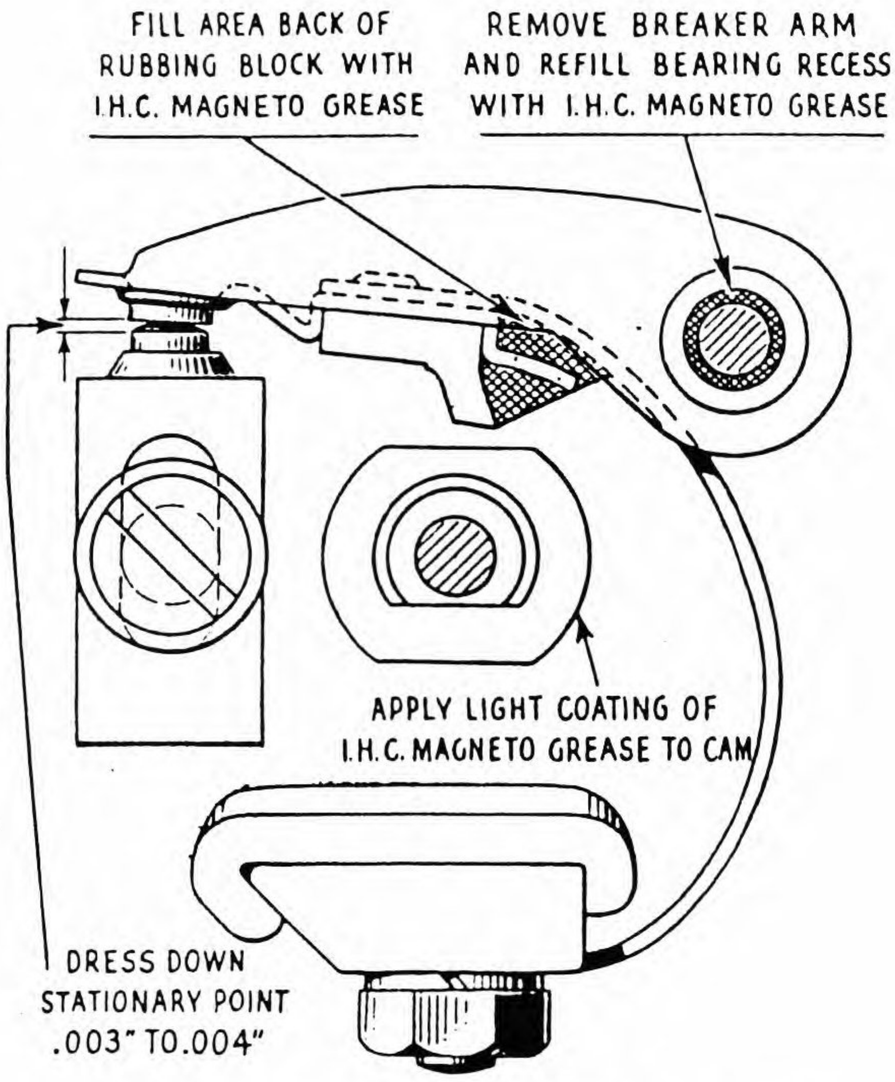

ILLUST. 87--GREASING H-4 BREAKER MECHANISM.

Before reassembling breaker mechanism thoroughly clean all parts to remove all grease and dirt. Fill the area back of the rubbing block as shown in Illust. 87 with I.H.C. magneto grease. Use a small clean screw driver as a spatula for this operation. Next fill the pivot bearing recess (3) with I.H.C. magneto grease. Use only enough grease to fill the recess in the shaft. Apply a light coating of grease to the breaker cam.

If the fixed breaker point has been removed, re-install it leaving the screw (8) slightly loose until point opening is adjusted. When re-installing the anchor block (5), (Illust. 89) do not push it tight against the housing, but allow it to stick out far enough so that it is pushed into place by the distributor pad (2) on the distributor body (4) (Illust. 90).

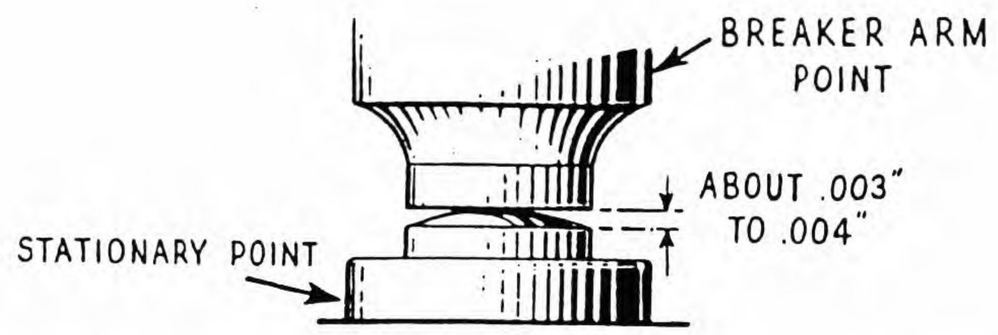

ILLUST. 88--CORRECTLY DRESSED BREAKER POINTS. DRESS DOWN OUTSIDE EDGE OF STATIONARY POINT FOR ABOUT .003 to .004" CROWN.

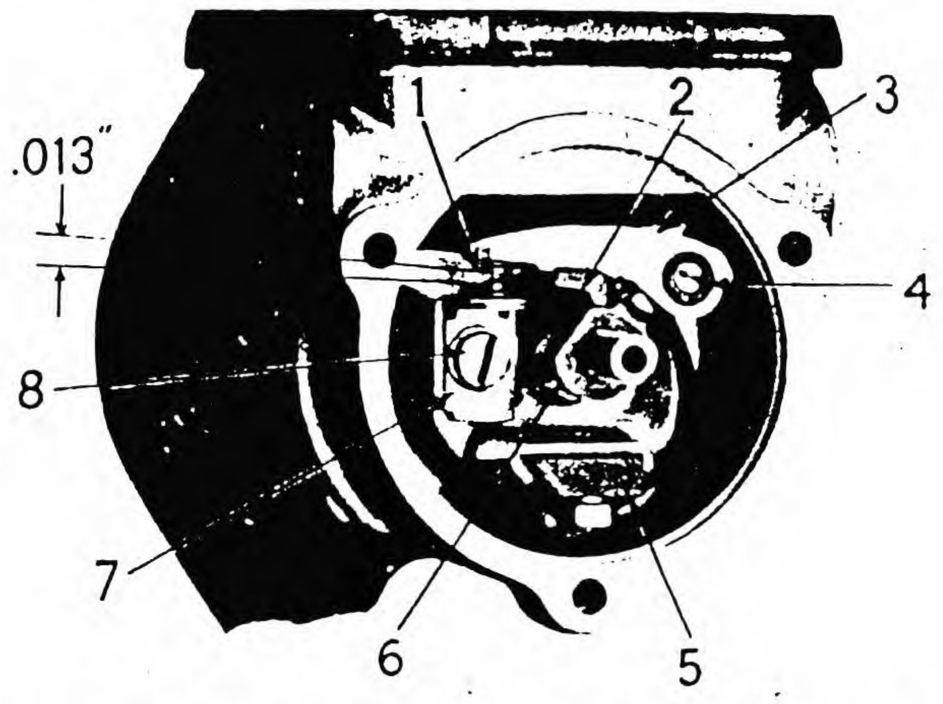

ILLUST. 89--END VIEW OF BREAKER MECHANISM. 1--POINT OPENING. 2--RUBBING BLOCK. 3--BREAKER ASSEMBLY. 4--BREAKER ARM PIVOT RECESS (FILL WITH MAGNETO GREASE). 5--SPRING ANCHOR BLOCK. 6--BREAKER CAM. 7--STATIONARY POINT. 8--ADJUSTING SCREW.

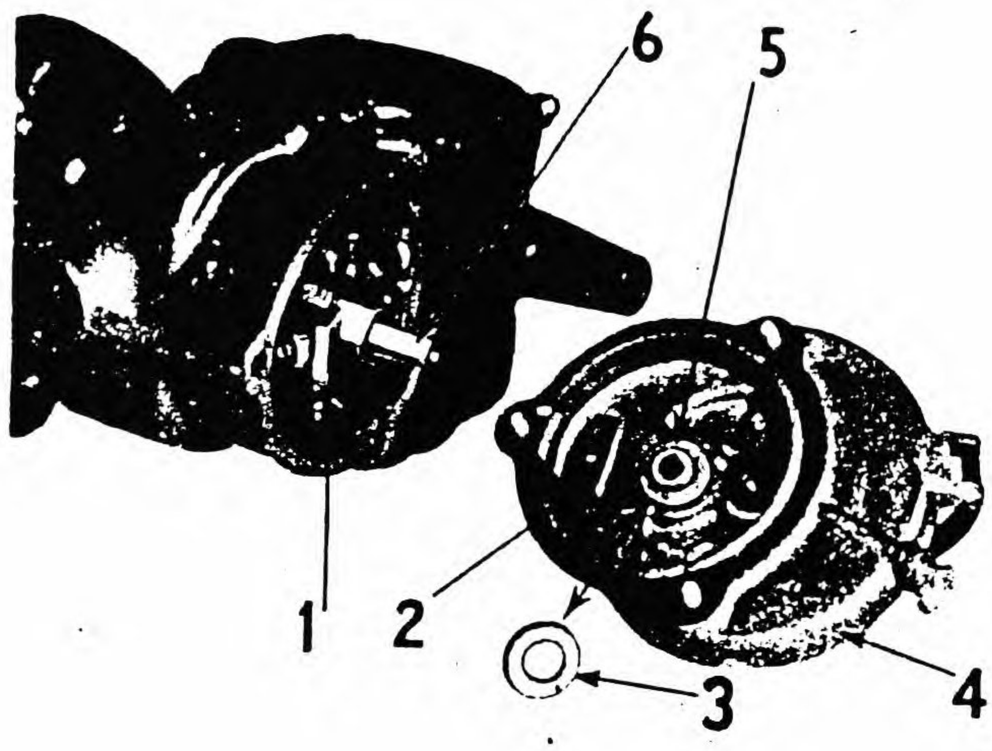

ILLUST. 90--H-4 MAGNETO WITH DISTRIBUTOR BODY REMOVED. 1--SPRING ANCHOR BLOCK. 2--DISTRIBUTOR PAD. 3--DISTRIBUTOR PINION OIL SEAL. 4--DISTRIBUTOR BODY. 5--DISTRIBUTOR PINION HUB. 6--FLAT ON END OF ROTOR SHAFT.

Timing Magneto To Engine

To time magneto to engine:

1. First turn the engine over to top dead center of the compression stroke for cylinder No. 1. This can be determined by removing the spark plug for No. 1 cylinder and cranking engine over until outward flow of air is felt. Then continue turning until flywheel or water pump drive pulley timing indicator lines up with "DC" mark.

On Farmall "A" and "B" Tractors and U-2 power units, timing marks are on flywheel. Timing pointer may be seen through opening in bottom of clutch housing.

On No. 62 Harvester-Thresher engines, line up letters "IGN" with timing pointer for No. 1 compression stroke. Pointer is visible through inspection hole in flywheel housing.

On Farmall "H" and "M", and "4", "6", "9" and "14" series carbureted engines, the timing indicator is on the water pump drive pulley and timing pointer is on crankcase front cover. The "DC" mark will be the first notch in the pulley to come in line as T.D.C. is approached.

On Farmall "MD" and "6" and "9" series Diesel Engines, pull compression release lever to convert engine to gasoline starting, and then turn engine past T.D.C. until "DC" mark on water pump drive pulley is 7/16" to 1" past the timing pointer in crankcase front cover. Later engines have the letter "M" stamped on water pump drive pulley at this position.

On "14" Series Diesel Engines, convert engine for gasoline starting and turn to "DC" mark for No. 1 cylinder on compression stroke.

2. Remove the cable from coil cover to the distributor cap.

3. Remove the distributor cap and turn magneto coupling in direction opposite to its normal rotation until arm on distributor points towards the No. 1 terminal on the distributor cap.

4. Assemble magneto on engine, making sure that impulse coupling lugs engage in slots on magneto drive coupling.

5. Insert magneto mounting bolts loosely in magneto flange, just enough to hold magneto in place.

6. On Farmalls "A", "B", "H" and "M" Harvester-Thresher, U-2, "4" and "6" Series carbureted engines, rotate the top of the magneto toward the crankcase. On "6" Series Diesel Engines and all "9" and "14" Series carbureted and Diesel engines pull the top of the magneto away from the crankcase.

7. Crank the engine one complete revolution or to the next T.D.C. Pull the upper part of the magneto toward the opposite side from that in step No. 6 until impulse coupling just trips.

On "6" and "9" series Diesel engines, it is good policy to start the engine and while the engine is still cold, move the top of the magneto to the point where the R.P.M. is maximum and the exhaust is snappy. A draggy, puffing exhaust indicates the need for additional retard of the magneto for starting purposes.

8. Tighten mounting bolts securely. Attach spark plug cables to engine and magneto. Start by connecting the No. 1 cylinder spark plug to the socket marked "No. 1" on distributor cap. Firing order on all four cylinder engines using the H-4 magnetos is 1-3-4-2. Crank the engine over with the distributor cap removed slightly to check actual position of each wire after "1". Also consult wiring chart in the Instruction Book for the engine being worked on.

9. To check timing, crank engine slowly until impulse coupling trips and compare timing indicator with "DC" mark.

10. If breaker points are examined and distributor gear case is to be replaced, rotor pinion must fit over "D" shaped end of rotor shaft. If rotor has been turned while inspecting points, there is danger of getting engine out of time by 180°. After setting points, turn engine to No.1 T.D.C.compression stroke, attach distributor rotor to its spindle, and then turn distributor rotor key to the No. 1 position on the distributor. Then assemble this unit over the rotor shaft, making sure rotor shaft enters "D" shaped hole in rotor pinion. Remove rotor and tighten the three screws.

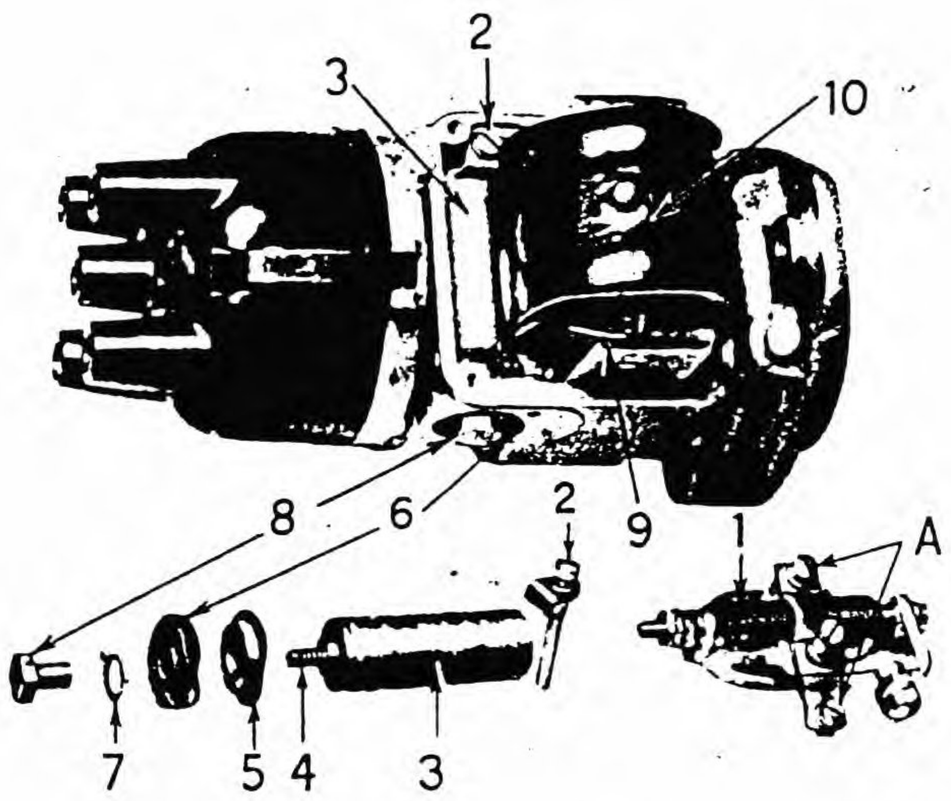

ILLUST. 91--H-4 MAGNETO WITH COIL COVER REMOVED SHOWING PARTS MAKING UP THE CONDENSER ASSEMBLY. 1--MAGNETO GROUNDING SWITCH. 2--CONDENSER CLAMP AND SCREW. 3--CONDENSER. 4--CONDENSER TERMINAL. 5--INNER BAKELITE WASHER. 6--OUTER BAKELITE WASHER. 7--CONDENSER TERMINAL LOCK. 8--TERMINAL SCREW. 9--PRIMARY LEAD-OUT WIRE. 10--COIL.

INTERNATIONAL H-4 MAGNETO

The condenser (3) Illust. 91, is located in the body of the magneto. To remove the condenser with the coil in place, first remove the grounding switch (1) by removing the screws (A). Next bend the lock (7) away from the flat on the condenser terminal screw (8). The screw may then be removed with the lock and outer bakelite washer (6). Remove the coil cover and then remove the condenser clamp and screw (2). Then push the condenser back into the frame and remove the inner bakelite washer (5) and the two primary wires (9) from the condenser terminal. (The primary wire from the breaker arm to condenser is not shown, but it is shown in Illust. 97, Item 1). The condenser may now be lifted out by working it forward through the side of the magneto. To assemble the condenser into the magneto just reverse the above procedure.

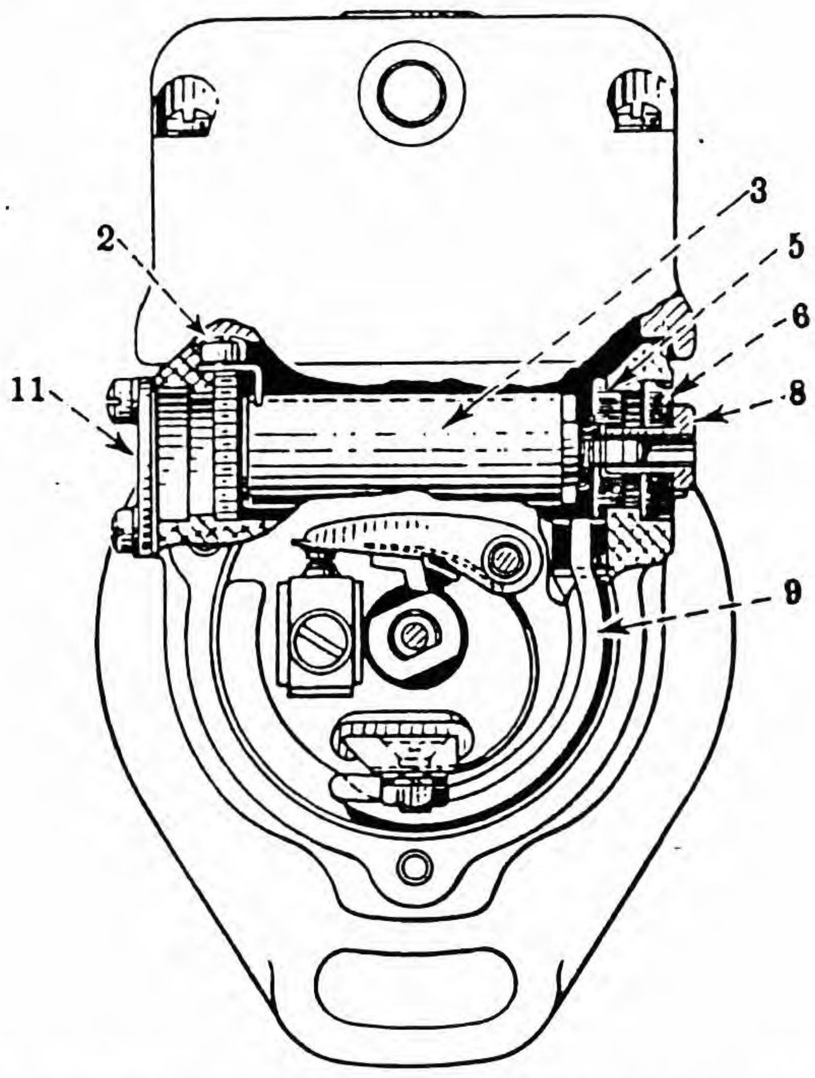

ILLUST. 92--CROSS SECTION VIEW OF H-4 CONDENSER ASSEMBLY SHOWING THE LATEST CONSTRUCTION. 2--CONDENSER CLAMP AND SCREW. 3--CONDENSER. 5--INNER BAKELITE WASHER. 6--OUTER BAKELITE WASHER. 8--TERMINAL SCREW. 9--CONDENSER PRIMARY WIRE. 11--CONDENSER HOLE COVER PLATE.

As shown in Illust. 92, removal and re-assembly of the condenser is simplified in the latest magneto by the substitution of a flat plate held by two screws instead of the expansion plug in the side of the magneto housing. Slide the condenser through this hole and make all other connections as outlined.

When tightening the condenser terminal screw (8) there is a possibility of breaking the bakelite washer (6) or breaking the condenser terminal (4), so do not apply too much pressure to the wrench when tightening screw.

The condenser is the same as used on the latest F-4 Magneto. By that we mean, it has the large diameter thread (No.10-32 threads per inch) on the terminal instead of No. 8-36 threads per inch. The H-4 condenser may be used to replace the old F-4 condenser in F-4 magnetos, by using a No.10 nut (32 threads per inch). The old F-4 condenser will not replace the condenser in the H-4 magnetos. The terminal screw will not fit the threads on the F-4 condenser.

H-4 Coil

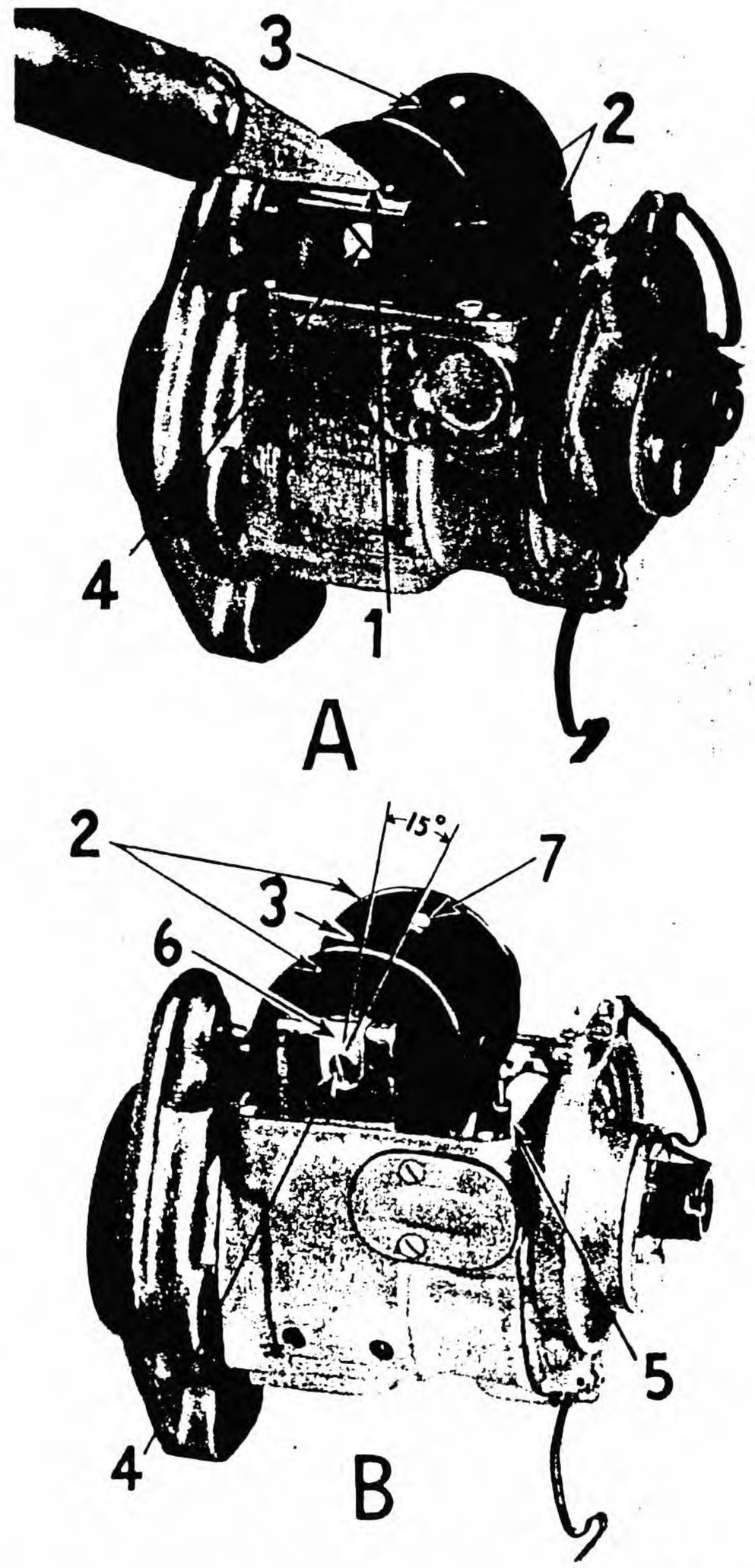

ILLUST. 93--COIL MOUNTING IN H-4 MAGNETO. 1--SOLDERED GROUND CONNECTION. 2--COIL INSULATORS. 3--COIL. 4--COIL CORE HOLDING SCREW, COUNTER SUNK. 5--CONDENSER TO BREAKER WIRE. 6--COIL GROUNDING STRIP. 7--SECONDARY LEAD-OUT TERMINAL.

The construction of the coil is very similar to that previously used on the F-4 and F-6 magnetos. To remove the coil, first remove the coil cover by taking off the four screws, (See Illust. 82). Then remove the condenser primary wire (9) Illust. 91, from the condenser terminal by following the same procedure as outlined for removing the condenser on Page 45. The next step is to remove the soldered strip (1) Illust. 93, from the top of the pole piece. This strip is used as a ground wire. When applying the soldering iron be careful not to overheat the strip and loosen the joint inside the coil; also do not hold the soldering iron too close to the coil.

Illust. 93 shows two magnetos with the coil cover removed. Magneto "B", which is of the later construction (71002 and up); shows the coil strip (6) attached under the countersunk screw (4) and requires no soldering iron to remove the coil strip. It is necessary only to remove the screw that holds the coil core. Next remove two screws (4) from each end of the coil core. The coil may then be taken out of the magneto.

Important: Before lifting coil out, turn magnet to the neutral position or so pole of magnet bridges air gap between end of coil pole pieces. The instructions for removing coil core and the examination for coil core fit between inter-poles as outlined on Page 14, applies to the H-4 Magneto.

Testing Condenser

To test the condenser, it must be removed from the magneto and then the test made with either the Neon Condenser Tester No. SE-1064, as explained on Page 15 or the Electrical Test Set, SE-846, as explained on Page 15.

Testing H-4 Coil

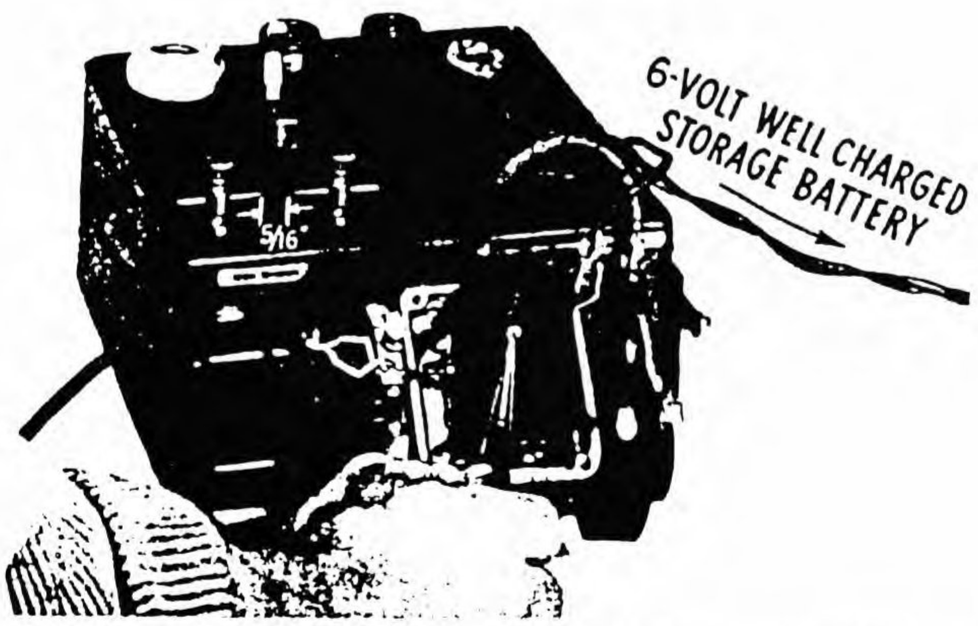

ILLUST. 94--TESTING H-4 COIL WHILE ASSEMBLED TO MAGNETO USING SE-846 WHEN COIL COVER AND CONDENSER ARE REMOVED. FOR METHOD USED REFER TO PAGE 12.

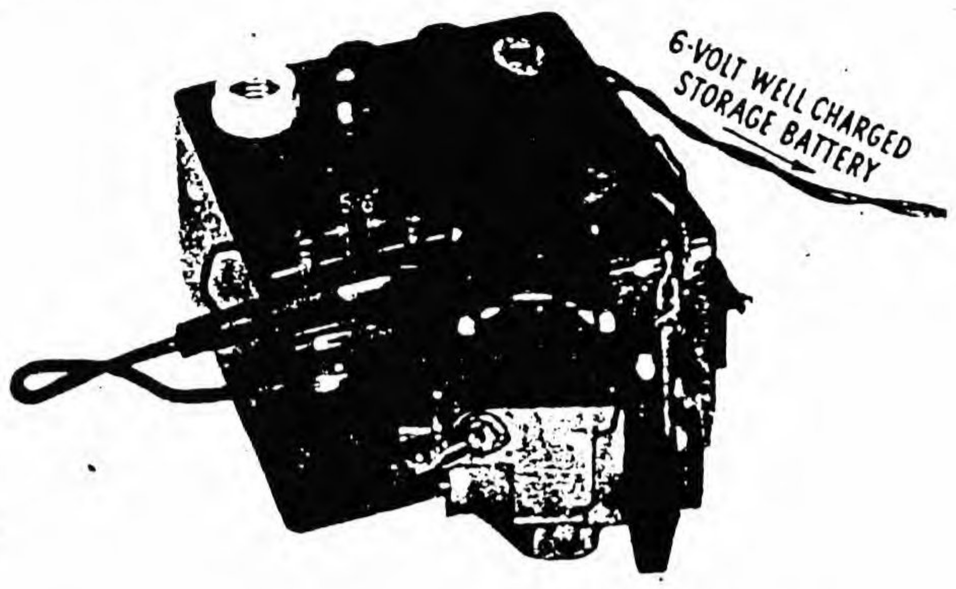

ILLUST. 95--TESTING H-4 COIL WHILE ASSEMBLED TO MAGNETO USING SE-846 WHEN COIL COVER IS IN PLACE AND BREAKER POINTS ARE OPEN. FOR METHOD USED, REFER TO PAGE 12.

When the coil is removed from the magneto it may be tested in the same manner as shown for the F-4 coil on Page 12 (Illust. 18). The coil also may be tested without removing it from the magneto as shown in Illust. 95.

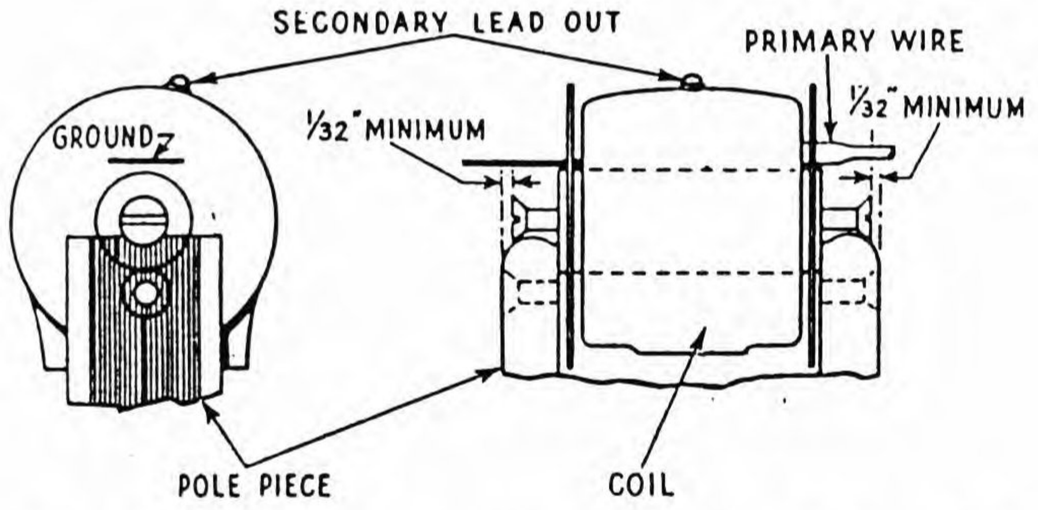

ILLUST. 96--ASSEMBLE COIL CORE MOUNTING SCREWS TO COIL CORE TO MAKE SURE THEY DO NOT BOTTOM IN CORE WHEN ASSEMBLED IN MAGNETO.

Inspect the end insulators (2), (Illust. 93) of the coil. If they are damaged they should be renewed. The end insulators are the same as used on the F-4 and F-6 Magnetos. When replacing the coil, the secondary leadout terminal (7), Illust. 93, should be at an angle of 15° with the center line of the coil. The reason for so positioning the coil terminal is to secure a good contact with the secondary terminal outlet in the coil cover.

Test coil core mounting screw length by bottoming screws lightly in coil core and pressing assembly into position shown (Illust. 96). H-4 mounting screws (4) are 5/8" length.

If either screw head does not fall back of the face of pole piece by 1/32"

as shown, it must be removed and enough cut off the threaded end to meet this requirement. When the coil core is in place the screws will then tighten up in the countersunk hole of the pole piece before the screws bottom in the coil core.

CAUTION: Do not file or otherwise deface ends of coil core or face of pole pieces as this will impair the magnetic circuit and efficiency of the magneto. The coil core should be a light press fit between the pole pieces.

Coil Marking

The coils are marked as to the month and year of their manufacture. For instance, a mark, 8-39, means that the coil was built in August 1939.

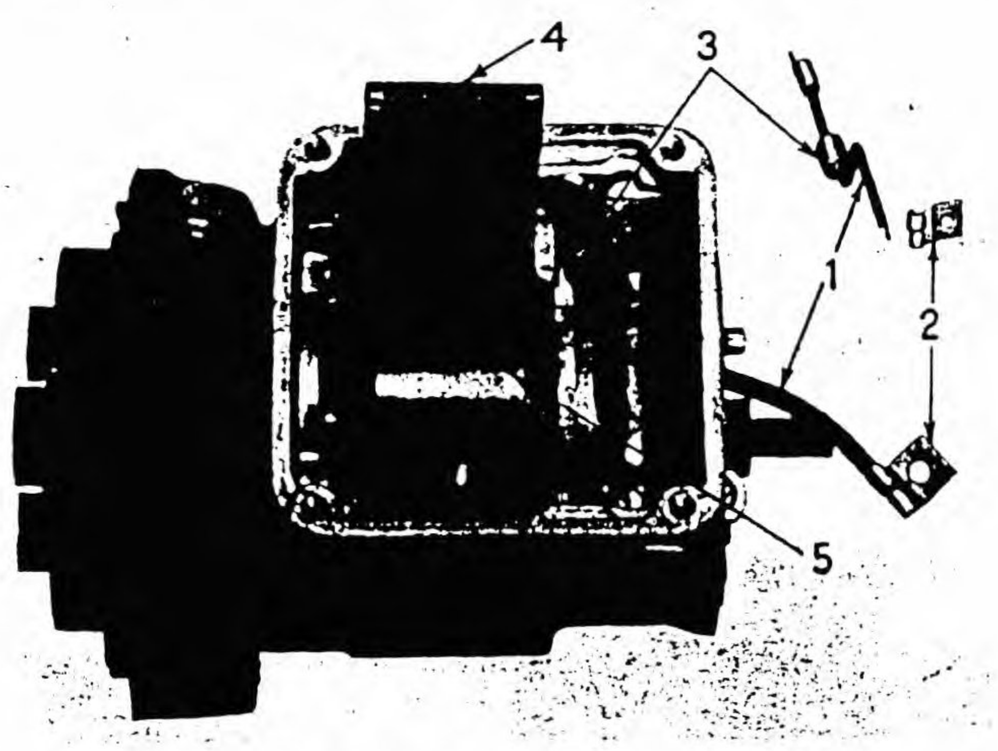

ILLUST. 97--LOCATION AND ASSEMBLY OF PRIMARY WIRE. 1--PRIMARY WIRE. 2--SPRING ANCHOR TERMINAL. 3--RUBBER GROMMET. 4--COIL INTER-POLE. 5--ROTOR MAGNET BRIDGING AIR-GAP.

The primary wire (1) connecting the breaker arm assembly to the condenser terminal, should be a tight fit in rubber grommet (3), and the rubber grommet (3) should be a tight fit in the magneto frame (Illust. 97). The primary wire and the rubber grommet should make an air-tight job in the magneto frame.

To remove the primary wire (1) the spring anchor terminal (2) must first be unsoldered. Then pull the terminal wire out from the top of the magneto. In reassembling the primary wire, reverse the above procedure.

The spring anchor terminal (2) should be assembled to the breaker arm assembly. When assembling the breaker arm to the magneto, do not flatten the terminal and be careful that it does not touch any part of the magneto frame.

Mounting Flange and Oil Seal

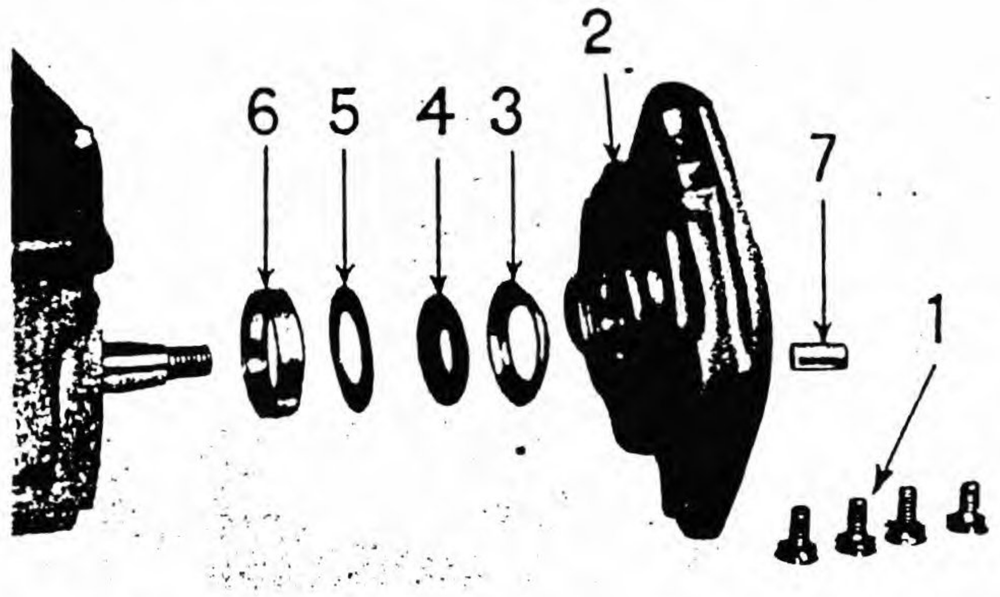

ILLUST. 98--H-4 MAGNETO WITH IMPULSE COUPLING REMOVED, SHOWING MOUNTING FLANGE AND ROTOR BEARING PARTS. 1--COUNTER SUNK SCREWS WITH LOCK WASHERS. 2--MOUNTING FLANGE. 3--FORWARD OIL SEAL RETAINER. 4--LEATHER OIL SEAL. 5--INNER OIL SEAL RETAINER. 6--OUTER BEARING RACE.

The mounting flange (2) attaches the magneto to the engine and is held to the magneto frame with four countersunk screws and shakeproof lock washers (1) Illust. 98. The mounting flange contains one of the rotor bearing races (6) and a leather oil seal (4). The purpose of the oil seal is to keep engine lubricating oil out of the magneto.

To remove the mounting flange, first remove the impulse couplings as explained on Page 53. Then, take out the four countersunk cap screws (1). When replacing, attach so impulse coupling oil cup is on top.

Removing Oil Seal

The rotor shaft leather seal (4) Illust. 98, and the two retaining members, (3) and (5) are held in place by press fit of the rotor ball bearing outer race (6). The rotor bearing races (6) can be removed with Puller SE-1020 as outlined and illustrated on Page 23. Races may be replaced with Tool SE-1020, shown on the same page.

Illustration 98 shows the sequence of assembly of bearing race and oil seal. The internal taper side of the leather oil seal (4) faces the bearing race (6) and the bulged side of the oil seal retainer (5) faces the oil seal (4). Careful centering and proper arrangement of the oil seal produces maximum compression and efficiency.

If a new bearing race has been installed, the recommended procedure is to remove complete rotor and bearings and reassemble all parts as covered under the heading of ROTOR MAGNETS and ROTOR BEARINGS (including checking magneto rotor shaft end play).

Rotor Magnets and Rotor Bearings

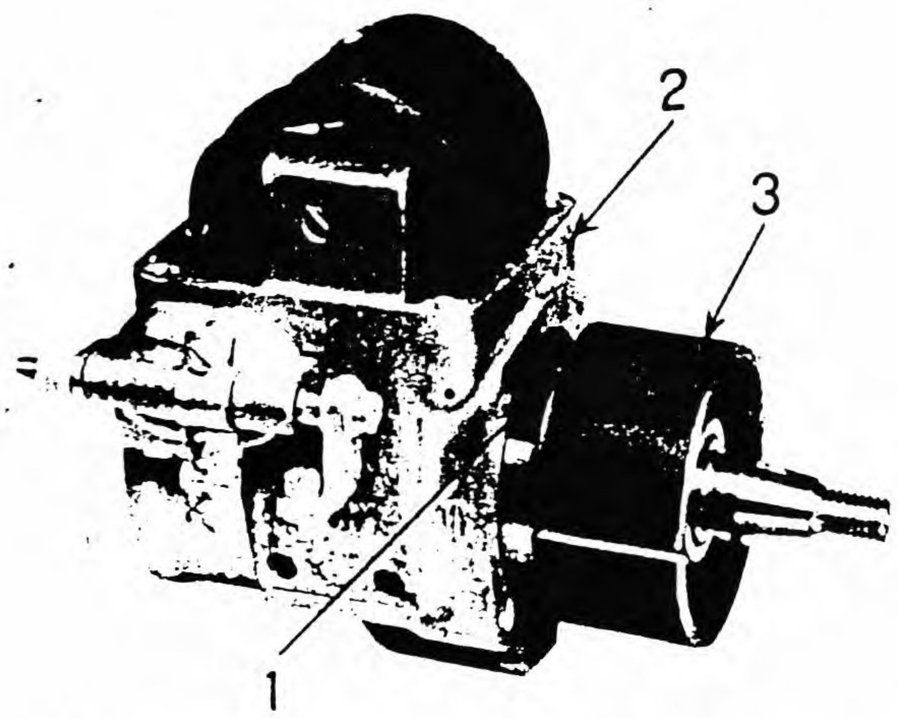

ILLUST. 99--REMOVING MAGNETO ROTOR. REMOVE ROTOR (1) FROM MAGNETO FRAME (2). SLIDE KEEPER #57314 D (3) OVER ROTOR POLES BEFORE ROTOR IS COMPLETELY OUT OF FRAME.

A new feature of the H-4 magneto is the combining of the rotor and the magnet which means that the magnet is the revolving part of the magneto. To remove the rotor and bearings it is necessary to remove the impulse coupling and mounting flange. Then slide the rotor magnet into keeper 57314-D (Illust. 99), as it is being removed from the magneto frame. Always have the rotor in the keeper when it is out of the magneto frame. Use extreme care to see that the rotor does not pick up dirt and metal particles. Keeper 57314-D is available as a service part.

Thoroughly clean rotor assembly and bearing races of the old grease and any grit. Re-greasing of the bearings should not be done until they have been checked for end play.

The bearings when assembled at the factory are preloaded .001 to .002 inches. The rotor should never have any perceptible end play if it is assembled properly. Old bearings and races should be assembled without disturbing shims (3) Illustration 100). Should an end play check, (Illustration 101) reveal that end play is present, no attempt should be made to preload old bearings as this will cause rapid deterioration of the bearings. The recommended procedure when end play exists on old bearings is to replace them.

Checking Rotor End Play

Place sufficient shims (2), Illust. 100, in back of the bearing race to allow a small amount of end play in the rotor

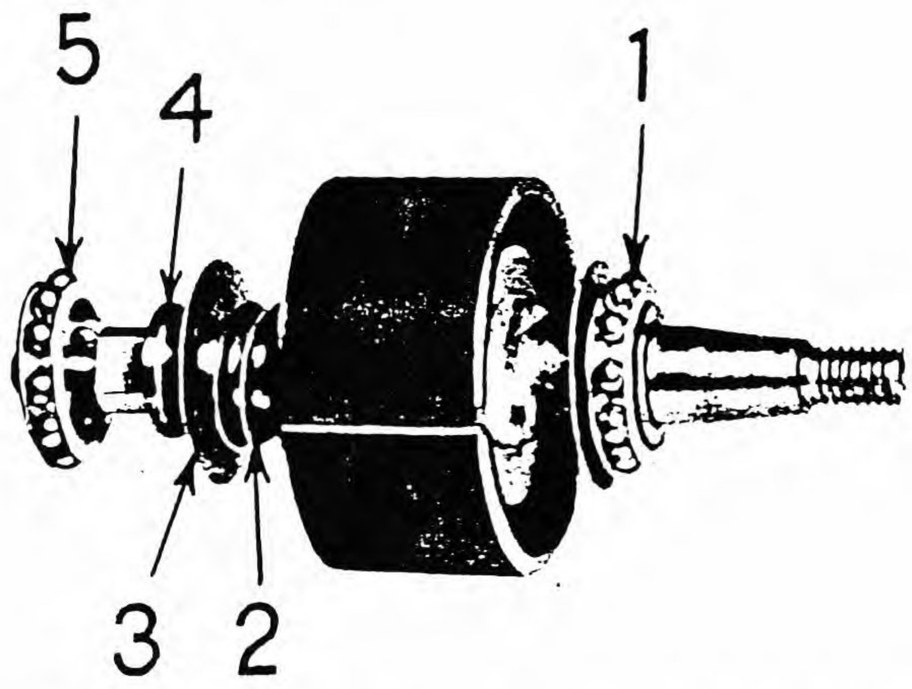

ILLUST. 100--H-4 ROTOR MAGNET WITH KEEPER, BEARINGS, AND SHIMS. 1--FORWARD BEARING. 2--ROTOR SHIMS. 3--INNER FELT RETAINER. 4--BEARING INNER RACE 5--BEARING RETAINER WITH BALLS.

shaft after it is completely assembled and the mounting screws are tightened up (end play should be checked with no grease on the bearings). The end play may then be checked with a dial indicator or or by making a device as shown in Illust. 101. Then check the end play between the fixture (3), and the end (1) of the rotor shaft (5) with a feeler gauge (2). Take two readings of the feeler gauge, one with the rotor as far one way as it will go, and the other with the rotor moved as far in the opposite

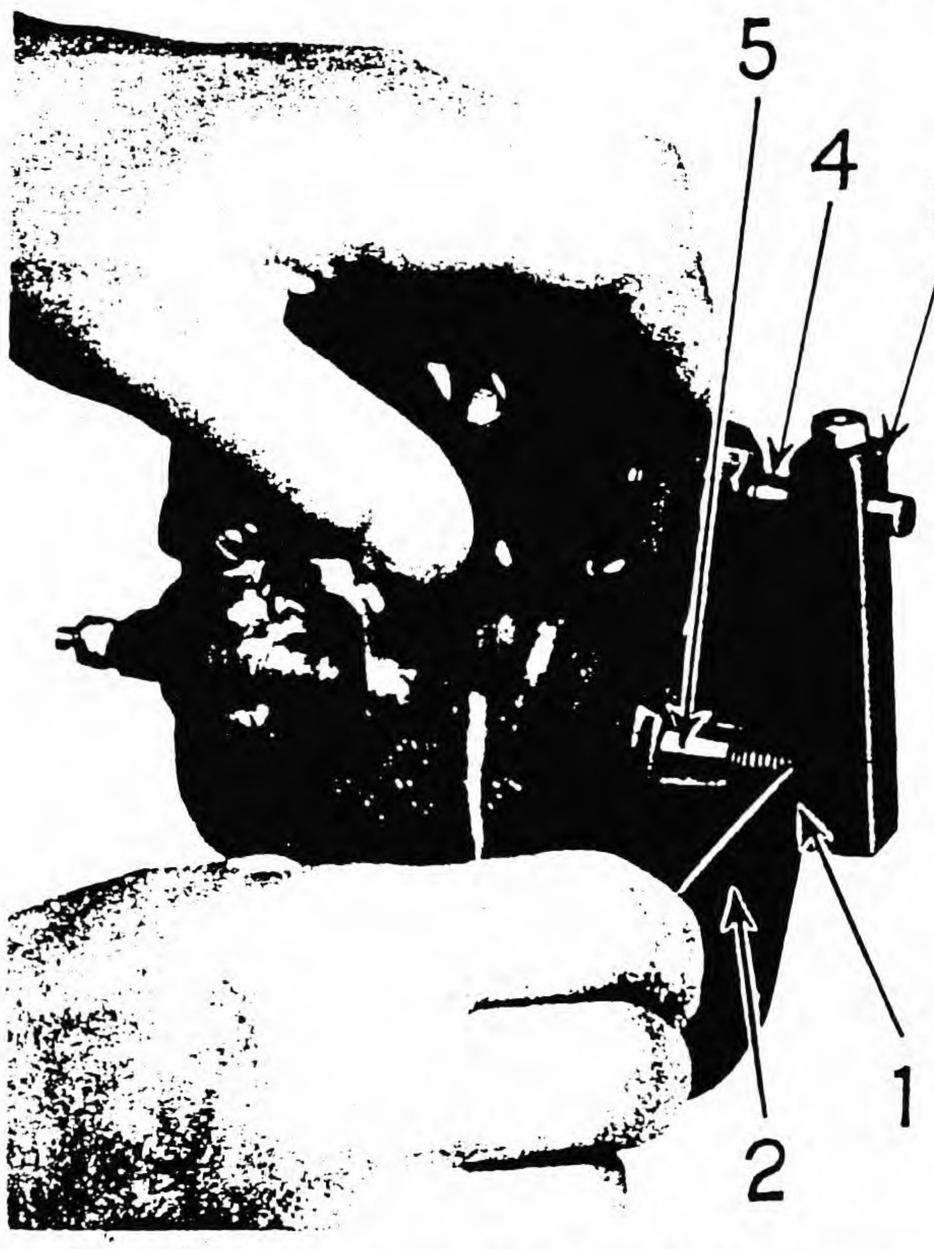

LLUST. 101--CHECKING ROTOR END PLAY. 1--CHECKING POSITION, 2--FEELER GAUGE. 3--FIXTURE END PIECE. 4--FIXTURE MOUNTING BOLT. 5--ROTOR SHAFT.

direction as it will go. The difference in these two readings, will be the actual end play. Add .001" to the difference between the two readings, which should be the thickness of the additional shims to be added. Remove the mounting flange, slide the rotor into the keeper 57314-D, then add the required number of shims (2), Illust. 100, in the proper location. Grease bearings, reassemble the rotor and the mounting flange and check the rotor for free turning. The preloading of the bearing should not cause binding of the rotor. Be careful not to overfill the bearings with grease; just fill the spaces between the balls of the bearings with I.H.C. magneto grease.

IMPORTANT: Be sure to keep the rotor and bearings clean during this operation. Do not drop the magnet or hit it with any sharp instrument, because it is very brittle and will chip readily.

Extreme care must be exercised to assure that the rotor is free from metal chips before it is assembled into the magneto as chips may jam the rotor. The magnet is highly magnetized and will draw all magnetic metals to it. Using compressed air is one of the best methods to clean the rotor.

Removing and Replacing Bearing Races

The ball bearings and outer bearing races are similar to those used in the F-4 and F-6 magneto and may be removed and replaced in the same manner, i.e., with tools No. SE-1020 and No. SE-1021 as outlined and illustrated on Pages 22 and 23. The inner race may be removed with tool No. SE-839 as explained on Page 22.

Magneto Magnet

As stated before, the magnet is part of the rotor and is the revolving member of the magneto. The magnet, made of a new alloy known as Alnico (an aluminum, nickel, cobalt and iron alloy), is cast directly into sand moulds. After it is once thoroughly magnetized, this magnetic material should never lose its magnetism if carefully handled.

We cannot stress too emphatically the importance of being careful tc guard against metal chips adhering to the magnet. The use of compressed air is one of the best methods of cleaning the magnet and rotor before assembly into the main frame of the magneto. The clearance of the magnet and the pole pieces of the magneto is so close that any chips adhering to the magnet may cause the rotor to become jammed.

Breaker Arm Cam

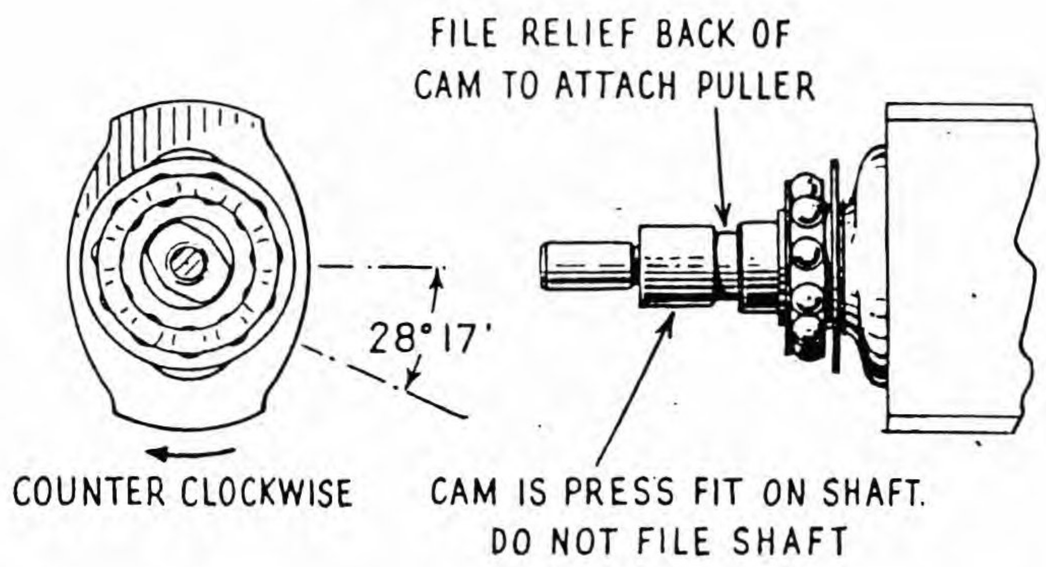

ILLUST. 102--POINTS AT WHICH ROTOR MAY BE FILED IN ORDER TO REMOVE CAM.

The breaker arm cam (2) Illust. 85 should last indefinitely if it is properly lubricated. If the cam should become worn, it is so designed that it may be replaced. If the cam is to be replaced, install the new slow rise cam 60094-D as outlined in Service Bulletin S-3738A-1713. This cam has greatly increased radii at contacting surfaces and provides a slower rise cam to overcome vibration of breaker arm at higher speeds, lengthen life of breaker arm and breaker points, and improve grease retention. The cam can be replaced as outlined below.

Remove the rotor from magneto:

1. Place magneto in a vise by holding it in the flange.

2. Remove the impulse coupling:

   a. Insert a nail or pin through the hole in the coupling drive member.

   b. Remove nut by applying a socket wrench to the nut, and an open end wrench to one of the driving lugs.

   e. Pull drive member and impulse coupling complete by using puller tool SE-912.

3. Remove key from shaft.

4. Remove mounting flange (4 cap screws).

5. Remove distributor cap and distributor rotor.

6. Remove magneto body (3 capscrews).

7. Withdraw rotor from body and attach keeper 57314-D to magnet of the rotor.

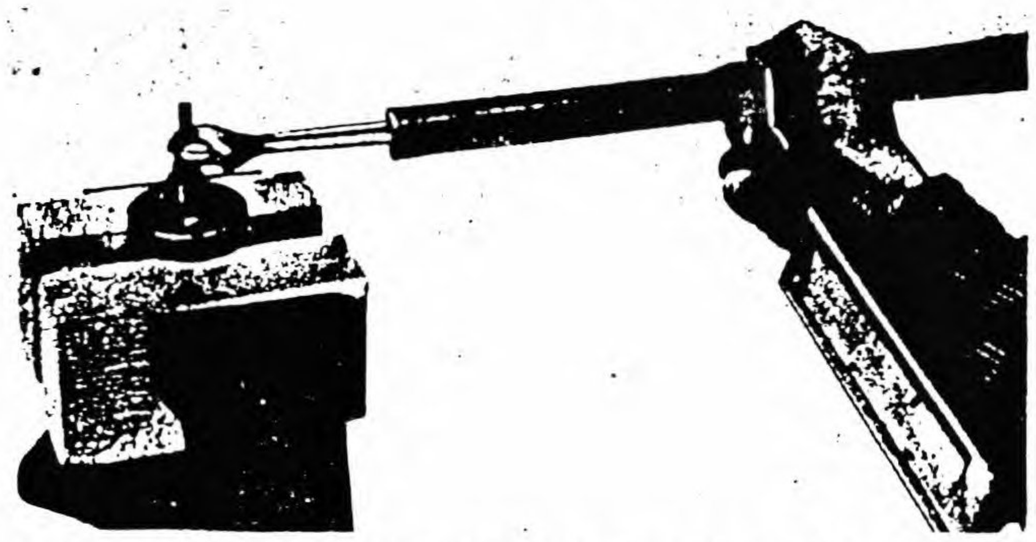

ILLUST. 103--CHECKING TIGHTNESS OF NEW CAM ON ROTOR SHAFT

Remove Old Cam From Rotor:

File an undercut just behind the rotor sufficiently deep to apply a small puller for removal of cam. Hold the rotor (with keeper 57314-D) in a vise, by using wooden blocks (Illust. 103), carved out to fit the assembly. Do not file the shaft diameter where the cam fits since the new cam must be a press fit on the shaft.

Replacement of Cam:

Clockwise Magnetos: "A", "B", "H", "M", "4" and "6" Series carbureted engines.

With key in place on rotor shaft, press new cam 60094-D on the shaft. Reassemble the rotor to the magneto body after it has been cleaned thoroughly and the bearings have been regreased. Then check the timing as listed under that heading.

Counterclockwise Magnetos: "6", "9" and "14" Series Diesel Engine and "9" and "14" Series Carbureted Engines.

Remove the key for cam from shaft, or file the key down to the shaft diameter. Do not file the shaft diameter itself as a new cam must be a press fit at this point. Press fit means the cam, after assembly, must withstand a torque of 11.2 foot pounds without turning on the shaft. This can be checked by holding the rotor in a vise as described above and applying an open end wrench with an extension (Illust. 103). Pull 11.2 lbs. on a spring scale 1 foot from the center of the shaft or 22.4 lbs. at 6" from the center of shaft. If the cam turns with less torque than this amount, it is very likely the cam will turn when magneto is put in use. Be sure it is tight on the shaft.

Press new cam in place with leading flat 28° 17' from transverse center line as shown in Illust. 102. (See cross section of the cam). Try to set the cam at

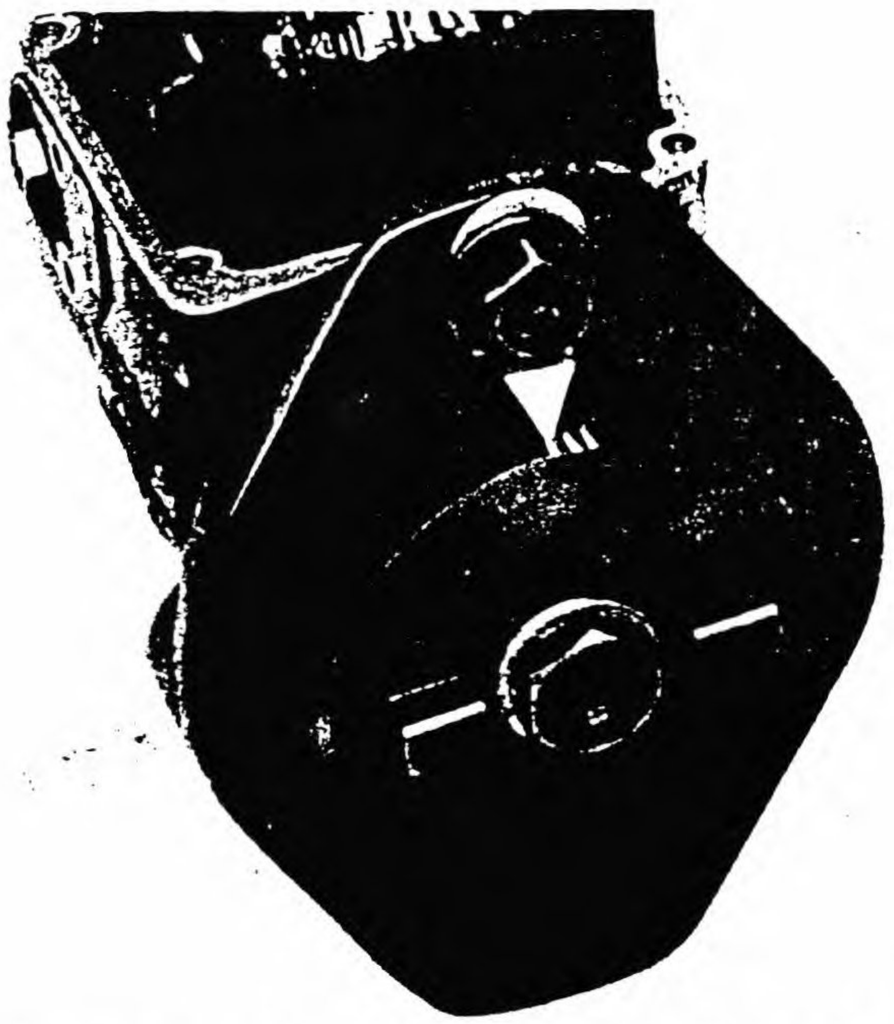

ILLUST. 104--CHECKING THE TIMING OF THE NEW BREAKER CAM WITH RESPECT TO IMPULSE COUPLING.

the proper angle before pressing it in place. The angle of the cam on the shaft may be changed to the correct value by applying a wrench to the cam and turning it on the shaft. Thoroughly clean the rotor and magnet, grease the bearings, and assemble the rotor to the body of the magneto. Now check the timing or cam position as listed under that heading.

Checking Magneto Timing (Cam Position): (Both clockwise and counterclockwise magnetos).

1. Mount the magneto in a vise, clamping on the flange.

2. Make a pointer out of thin sheet steel and mount as shown in Illust. 104.

3. Remove coil cover from top of magneto.

4. Turn rotor until the points are open all the way on high point of cam, and adjust the opening very accurately to .013 inches.

5. Turn the rotor until the poles of the magnet bridge the gap or opening between the ends of the pole pieces in the magneto body as shown in Illust. 97. The magnetic pull will hold magnet in this position; look between coil and the front of the body to see the pole of the magnet come into position.

6. Make a mark below pointer on the outside diameter of the impulse coupling drive member at the position set in Operation 5.

7. Turn coupling and rotor slowly in the counterclockwise direction (Diesel magnetos "9" and "14" Series carbureted engine magnetos)until the breaker points just open. Now make another mark below the pointer on the drive member. (Turn all the other carbureted engine magnetos in the clockwise direction).

8. Measure the distance between the mark on the drive member. This distance should be .137" or between 1/8 and 3/16".

9. If points do not open within this range (1/8 to 3/16") remove breaker point, place the nail or pin in drive member, and turn cam on the shaft to bring the point of opening within the above range.

10. When checking clockwise magnetos, the second mark will appear to the left of the first mark instead of to the right, and should be within the same range, 1/8 to 3/16". The leading flat of the cam on these magnetos with key in place should be 23° 50' from the horizontal center line.

Be careful that every part of the rotor and bearings are perfectly clean, i.e., remove the old grease from the bearings,replace with new I.H.C. grease, and clean the rotor of any metal chips which may have adhered to it. Be sure to keep the rotor in the keeper 57314-D during these operations.

Slow rise cams are used in magnetos with serial numbers 180,001 to 181,000 and from 216,970 up. Clockwise magnetos 180,001 to 181,000 do not have cam key 21342-D.

If cam is to be replaced on magnetos with serial numbers 220,001 to 220,956, remove or file off the cam key 21342-D in rotor shaft and place a new key in hole in opposite side of shaft. Then press new slow rise cam in position and check as outlined above.

Distributor Gears

Distributor gears are contained in a chamber which is part of the distributor body, (Illustration 105). This chamber is partially filled with I.H.C. magneto grease and sealed with felt washers around the hub of the gears. These seals and the consistency of the grease should prevent any possibility of the grease working out of the chamber.

To remove the distributor gear, first disassemble the distributor cap, the distributor rotor (Illustration 83) and the distributor gear chamber cover (2),

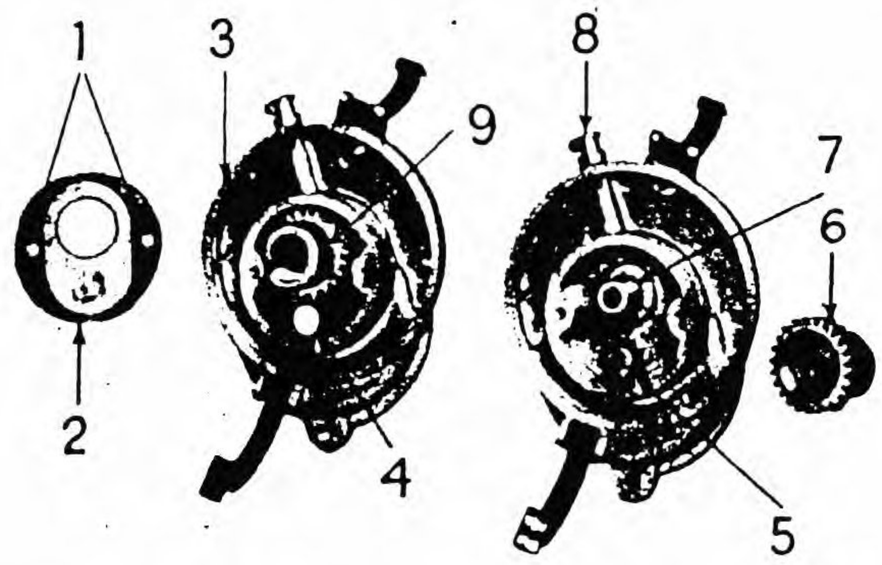

ILLUST. 105--DISTRIBUTOR GEAR ASSEMBLY. 1--CAPSCREWS (2) IN COVER. 2--GEAR CHAMBER COVER. 3--GEAR BODY. 4--BORE FOR DISTRIBUTOR PINION SHAFT. 5--DISTRIBUTOR PINION. 6--DISTRIBUTOR GEAR. 7--DISTRIBUTOR SHAFT. 8--DISTRIBUTOR BEARING OIL CUP. 9--DISTRIBUTOR SPINDLE.

Illustration 105. Now both the distributor gear and the distributor pinion may be removed.

Timing of Distributor Gear

The old distributor gear has two markings: (1) Counterclockwise rotation -- two teeth cut off at an angle, (2) clockwise rotation -- two teeth with ends partially cut away by a circular cutter. When assembling this type distributor gear to the pinion, set the two marked teeth straddle of the one marked tooth on the rotor gear pinion. The old

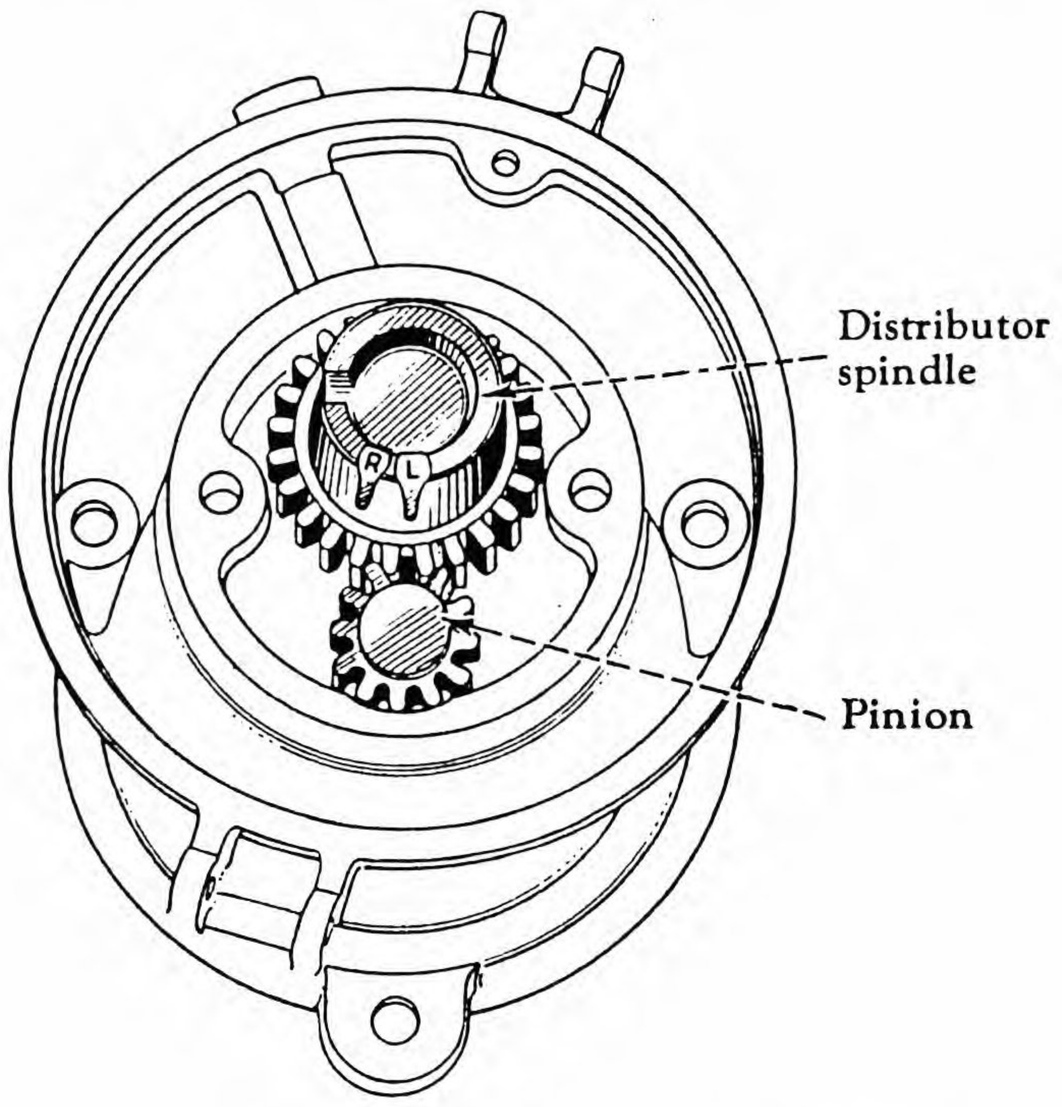

ILLUST. 106--NEWEST TIMING MARKS ON H-4 DISTRIBUTOR SPINDLE AND PINION. "R" - - - CLOCKWISE MAGNETO, "L" - - - COUNTERCLOCKWISE MAGNETO.

distributor gear removed from the magneto will have but one set of markings on the gear, so there will be no possibility of confusion.

A change has been made on the later type distributor spindle and gear, changing the timing marks. The letters "R" and "L" are formed on the spindle (Illustration 106). The "R" marking on the new distributor spindle is the setting for the clockwise magnet, and the "L" marking on the end of the distributor spindle is a correct lineup for counter-clockwise magnetos. Time the new type distributor spindle by meshing the rotor pinion and the distributor gear so that the marked tooth on the pinion is in line with the correct marking for the type of magneto being timed. The new gear can be used to replace the old.

Before assembling the distributor gear, be sure that the gear and the gear chamber are thoroughly cleaned of old grease and any grit that may be present. The magneto greasing recommendation is that the grease in the distributor gear chamber should be cleaned out and replaced with I.H.C. grease every 2000 hours of operation.

To grease the distributor gear spindle (9), Illustration 105, fill the hole four-fifths full of I.H.C. magneto grease and press the gear on to the shaft (7). Because of entrapped air, the gear may spring back after pressure is removed. To bleed out the entrapped air, turn the magneto by hand with a light inward pressure on the gear hub. This method of greasing will force grease into the oil holes in the shaft (7) and the housing (3) and will prevent fluid oil from entering this chamber. The purpose of adding oil to this chamber is to keep the grease from drying out. The recommended greasing instructions as outlined in the instruction book call for filling the distributor bearing oil cup (8) once every 500 hours of service, using the same grade of oil as used in the engine crankcase. A caution is added, stating: "Do not oil oftener, as excessive oil might work to the breaker points, causing rapid point wear." Tube from oil cup (9) leads directly to hollow shaft (7).

Replacing Felt Oil Seals in Distributor Gear Housing

The felt oil seals in the distributor body (Illust. 90), may be replaced by driving out the old retainer and replaced with a new retainer and felt assembly (2)(Illust. 105). Before replacing the retainer and felt, clean out the hole with a metal cutting tool, such as a bearing scraping tool. Then lock the new retainer in place with a center punch.

Do not soak the new felt seals in oil. After assembly of the seals, coat them on the inside slightly with I.H.C. magneto grease.

Distributor Rotor

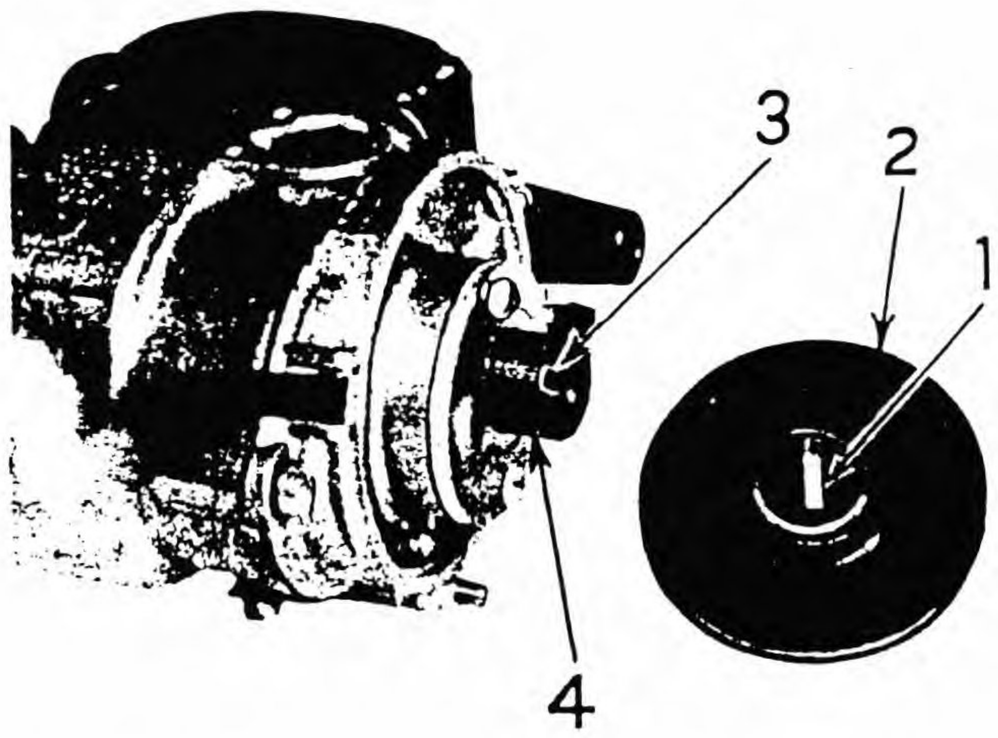

ILLUST. 107--DISTRIBUTOR ROTOR REMOVED SHOWING KEY AND KEYWAY FOR LOCKING IN POSITION. 1--ROTOR KEY. 2--ROTOR. 3--DISTRIBUTOR SPINDLE KEYWAY 4--DISTRIBUTOR SPINDLE.

Distributor Rotor (2), Illustration 107, is exposed after removal of the distributor cap. The distributor rotor should be a pressed fit on the distributor gear hub (4). To remove the rotor apply the end of the screw driver against the hub of the rotor and pry off as shown in Illustration 82. When replacing the rotor, be sure that the key (1), on the inside of the rotor coincides with the slot (3) on the end of the distributor gear spindle. To assist in lining up the key with the slot use the rib which is opposite the Monell arm on the opposite side of the rotor as a guide, the rib being in line with the key. Be sure that the rotor is pressed on as far as it will go because there is a possibility of entrapped air preventing the rotor from being pushed all the way on to the hub of the distributor gear.

The Monell metal arm (1), Illustration 108, on the distributor rotor is adjustable and renewable. The arm should operate as close to the insert in the distributor cap as possible without rubbing. (Refer to Illust. 108). To correctly adjust the distributor arm, a cap may be taken from parts stock and cut away as shown in Illust. 109. Then by using a feeler gauge the distance be-

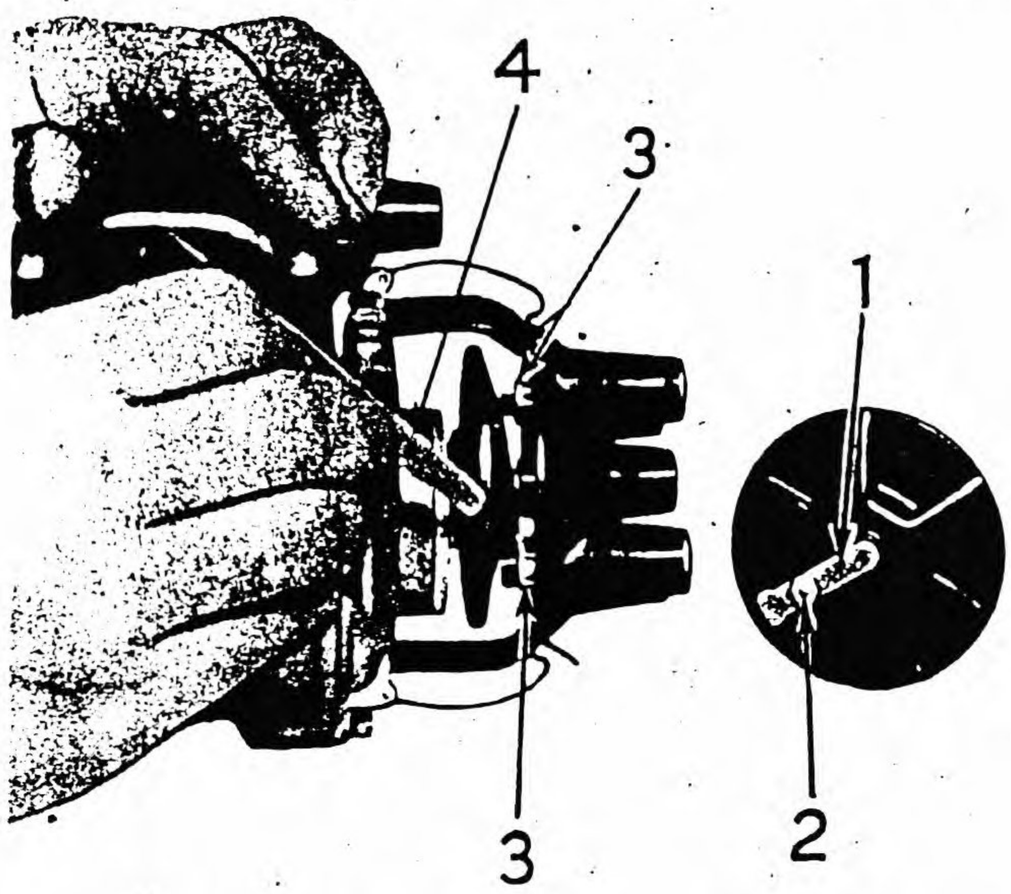

ILLUST. 108--CHECKING CLEARANCE BETWEEN DISTRIBUTOR ROTOR METAL ARM AND THE INSERT IN DISTRIBUTOR CAP USING A CUTAWAY CAP. 1--MONEL METAL ARM. 2--ARM NUT. 3--DISTRIBUTOR CAP INSERT 4--FEELER GAUGE.

tween the distributor arm and the insert in the distributor cap can be checked.

Another method is to apply a little prussian blue to the ends of the distributor arm, then place the distributor cap on the magneto. Next turn the magneto rotor over several times by hand. If the limits between the distributor arm and the cap insert are close, a small amount of the bluing will be transferred to the distributor cap insert. A very slight coating should show on the insert without any actual rubbing occurring.

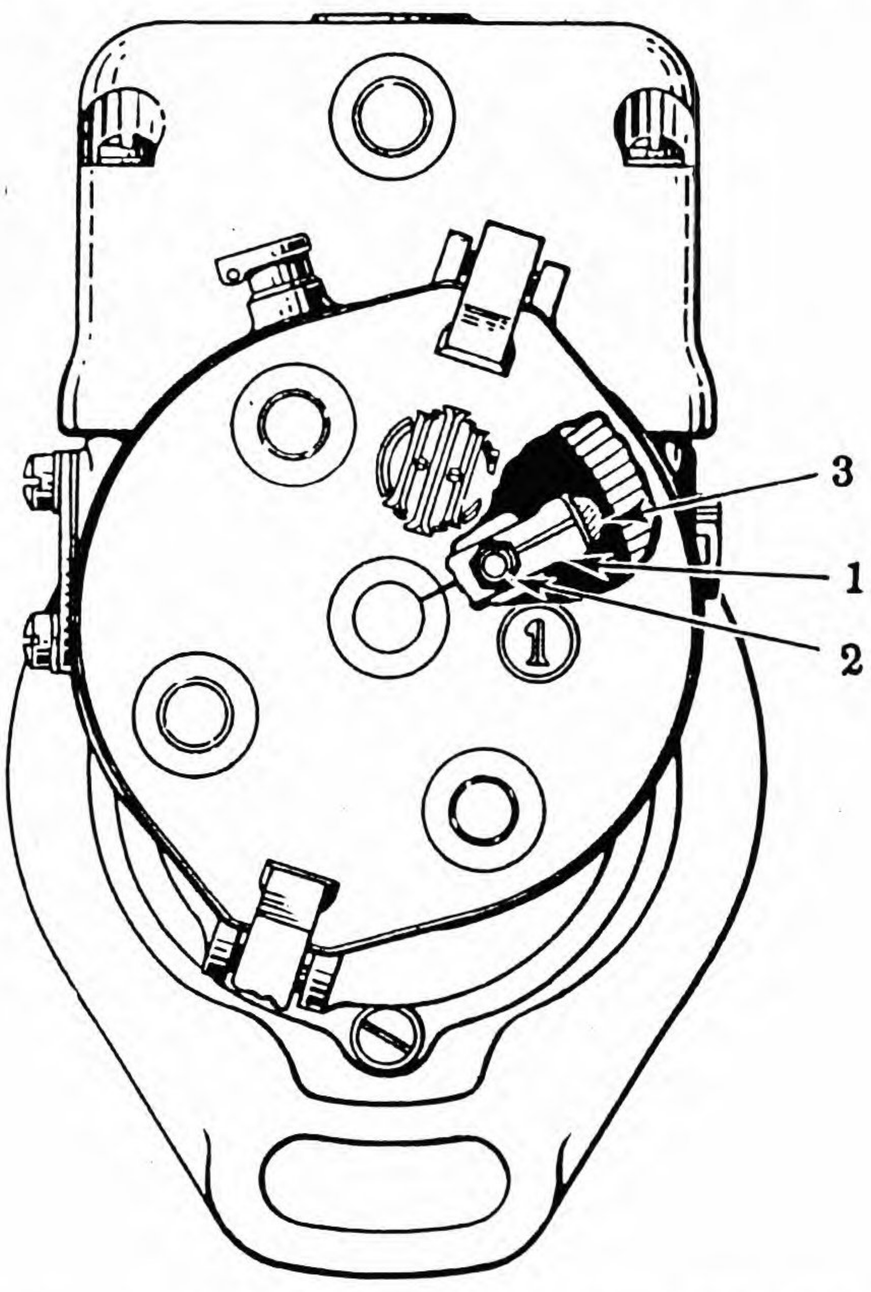

ILLUST. 109--LOOSEN NUT (2) TO ADJUST DISTRIBUTOR ROTOR ARM (1) AS CLOSE TO ALL FOUR DISTRIBUTOR CAP INSERTS (3) AS POSSIBLE WITHOUT ACTUALLY RUBBING.

To adjust the rotor arm, loosen the nut (2) Illustration 82, and move the arm to a point that just clears the distributor cap inserts. Use both methods of checking clearance or the latter only.

The inside of the distributor cap must be kept clean and dry. The two ventilating holes should be kept open at all times.

The operator of engine on which the H-4 magneto is used should be cautioned to keep the distributor cap ventilating holes (Illust. 82) open and not to overoil the distributor gears, because there is a possibility of thin lubricant working into the breaker chamber.

Impulse Couplings

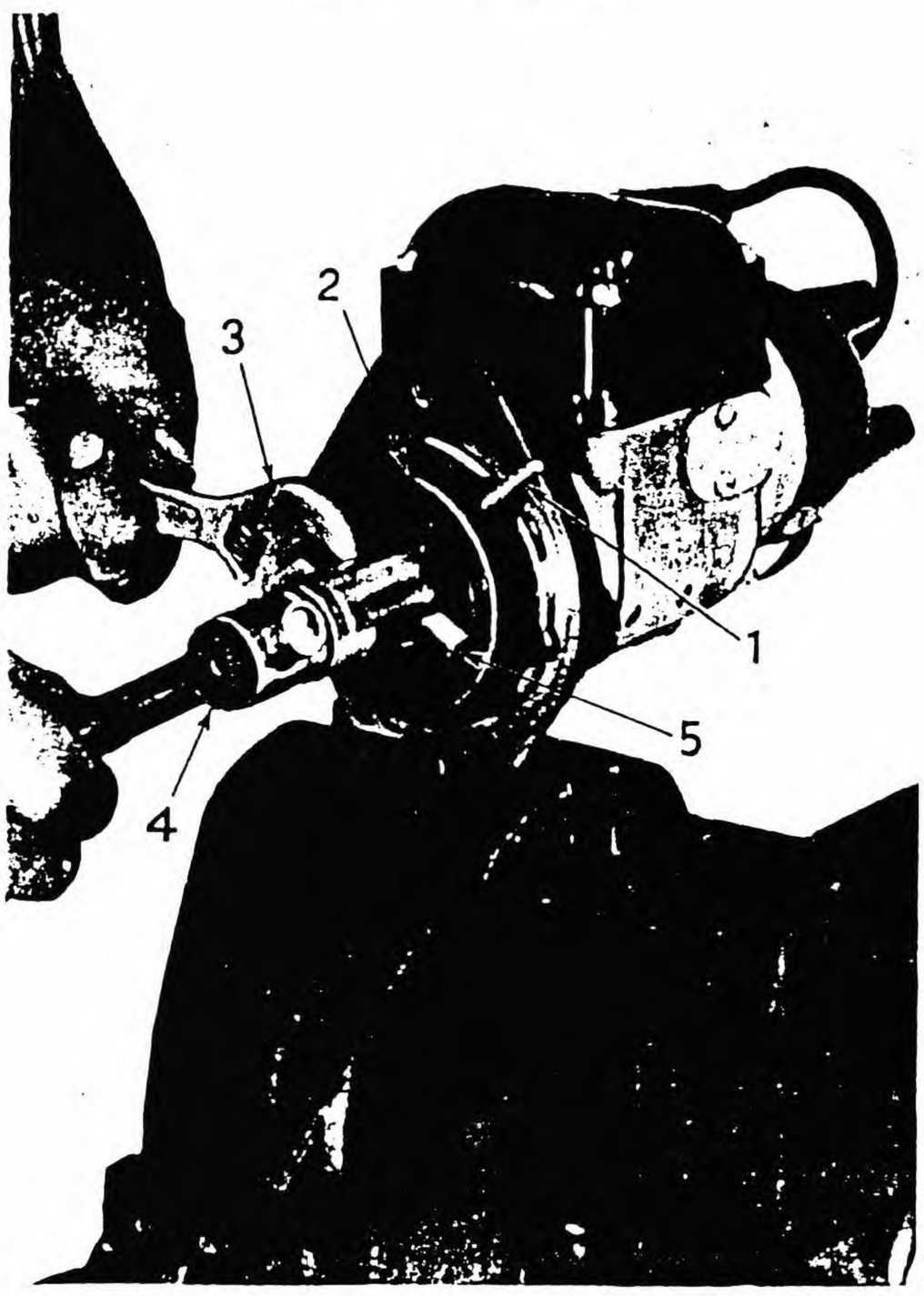

ILLUST. 110--CORRECT METHOD OF REMOVING IMPULSE COUPLING NUT. 1--PIN CONNECTING HOLE IN IMPULSE DRIVING MEMBER AND LUG OF MAGNETO MEMBER. 2--IMPULSE DRIVING MEMBER. 3--ADJUSTABLE WRENCH. 4--SOCKET WRENCH. 5--LUG ON IMPULSE DRIVING MEMBER.

To remove the impulse coupling insert a nail or pin through a hole (1), Illust. 110, in coupling drive member (2), locking the two elements together. Apply a socket wrench to the nut and a wrench to one of the driving lugs (3) to prevent shearing the nail or pin while removing nut. The impulse coupling may now be removed with tool No. SE-912 which screws into a thread provided inside coupling body (6), Illust. 111.

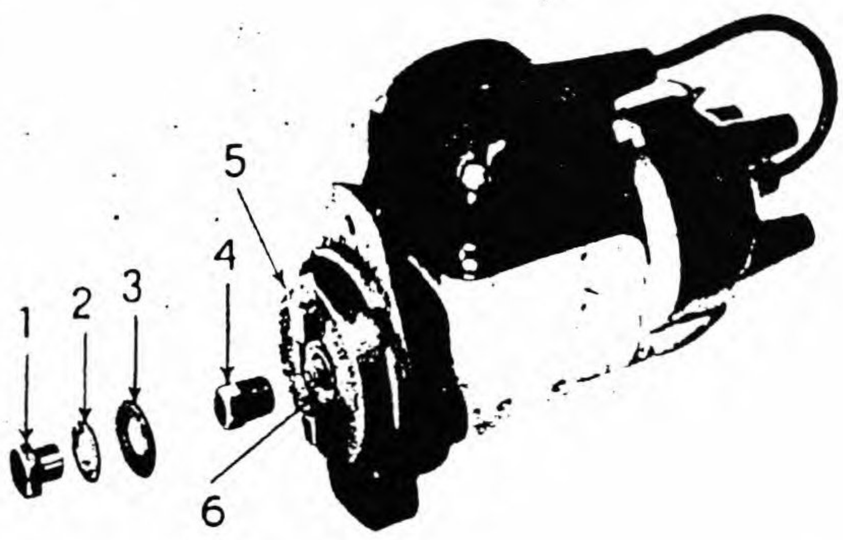

ILLUST. 111--REMOVING IMPULSE COUPLING. 1--IMPULSE NUT. 2--LOCK WASHER. 3--WASHER. 4--SERVICE TOOL SE-912. 5--IMPULSE DRIVE MEMBER. 6--THREAD ON INSIDE OF MAGNETO MEMBER.

The impulse coupling driving member (6) with impulse coupling spring (1) can readily be removed as shown in Illust. 112. The impulse coupling spring (1) should very seldom need to be removed from the driving member, but should it be necessary to remove the spring it can readily be pried out of place. To replace this spring, just compress it sufficiently to fit into the driving member as shown. Before assembling the impulse coupling member (6) with the body (7), soak the wick inside the impulse coupling spring and the felt inside retainer

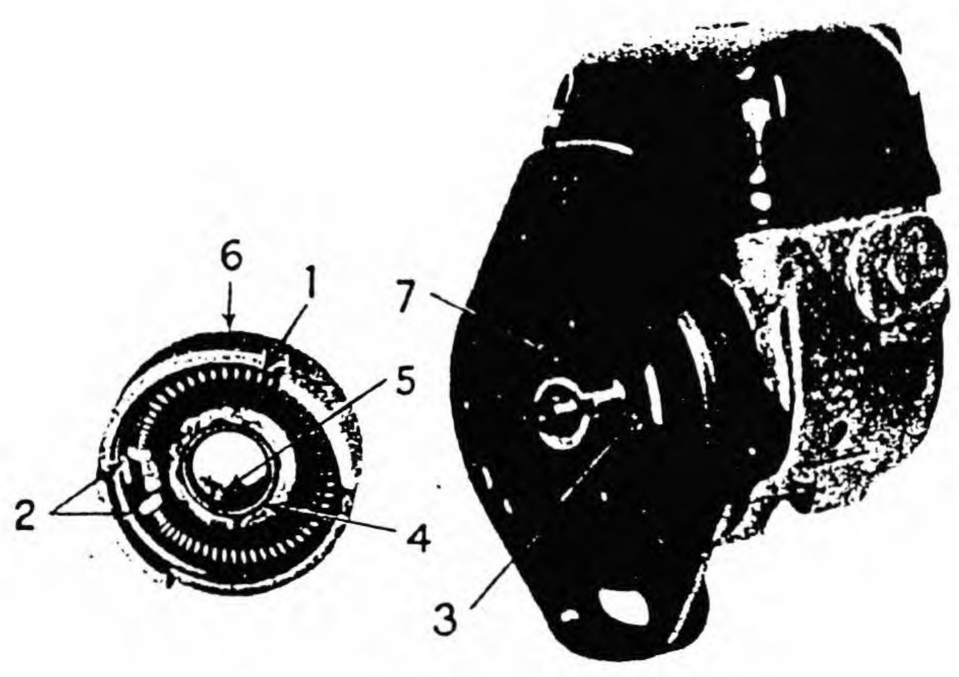

ILLUST. 112--IMPULSE COUPLING REMOVED. 1--IMPULSE SPRING. 2--IMPULSE SPRING BUTTON. 3--LUG ON MAGNETO MEMBER. 4--FELT RETAINER. 5--DRIVE MEMBER HUB. 6--IMPULSE DRIVE MEMBER. 7--IMPULSE MAGNETO MEMBER.

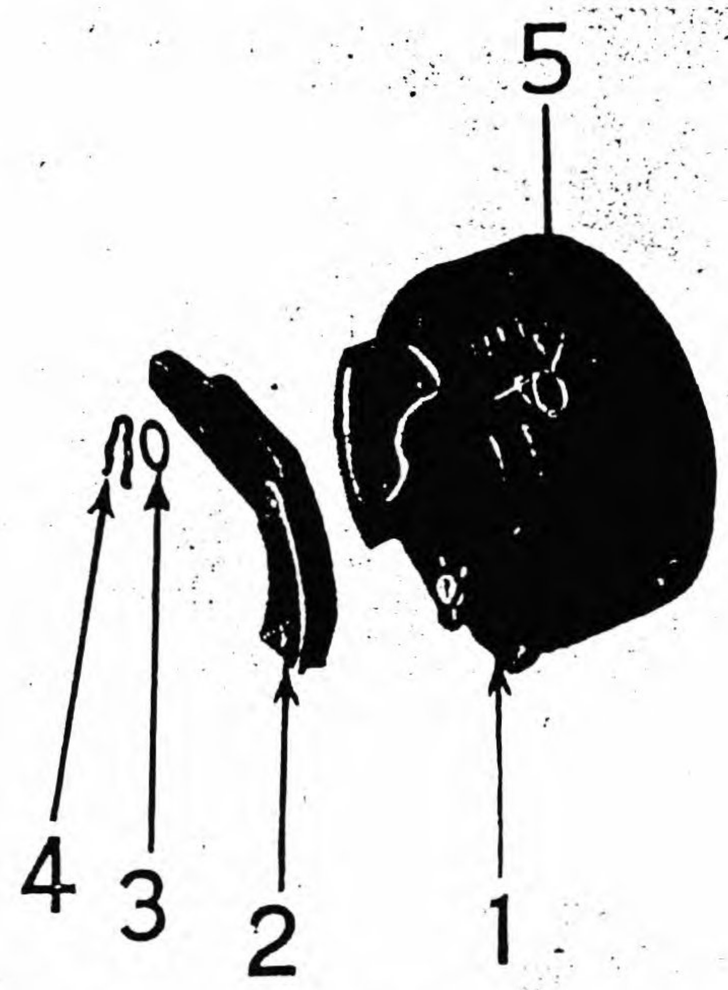

ILLUST. 113--IMPULSE COUPLING COMPLETE SHOWING REAR SIDE OF MAGNETO MEMBER WITH IMPULSE PAWL REMOVED. 1--IMPULSE PAWL. 2--COUNTERWEIGHT. 3--WASHER 4--RETAINING SNAP RING. 5--IMPULSE PAWL SPRING.

(4) with either light household oil or cream separator oil. Also coat inside hub (5) of the driving member with I.H.C. magneto grease. The lug (3) should be a tight fit between the hardened button (2) on each end of the impulse coupling spring. If the buttons (2) should become worn or grooved renew them.

The first H-4 magnetos were built with an impulse coupling which had a missing speed of approximately 120 R.P.M. These couplings may be identified by their construction in that they did not have the counterweight (2) added to the pawls (1), Illust. 113; these couplings did not have the two small springs (5).

The latest coupling is the type shown in Illust. 113 and has a missing speed of approximately 150 R.P.M. New couplings are used on magneto Serial No. H4-7635 and up. The new coupling has weighted pawls (1) and stainless steel coil springs (5). To secure good impulse coupling performance, it is necessary that the springs be in good condition and they should be replaced if worn or broken.

Explanation of H-4 Magneto Markings (Chart - page 55)

Serial Number

The serial number on the magneto frame will identify the magneto and give all necessary information about it by referring to the magneto chart. NOTE: A few of the first production 49094-D magnetos were issued with "XDH4-000000" on the ser-

INTERNATIONAL H-4 MAGNETO

Magneto Markings					
Unit	Serial	Spark Range and Rotation	Impulse Coupling		Distributor Spindle Timing Mark (See Page 51)
			Magneto Member	Drive Member	
A, B, U-2, H, W-4, I-4, O-4, U-4, IU-4, M, W-6, I-6, O-6, U-6, IU-6, T-6	H4-000,000	35° C.W.*	...	...	R
W-9, I-9, U-9, IU-9, T-9, W-14, T-14	H4-000,000-L	35° C.C.W.*	L7	L	L
MD, WD-6, ID-6, UD-6, IUD-6, TD-6, WD-9, ID-9, UD-9, IUD-9, TD-9, TD-14, UD-14	H4-000,000-D	15° C.C.W.	L3	L	L
60 H.T. 61 H.T. 62 H.T.	H4-000,000-X	10° C.W.	R2	XR	R

* C.W. = Clockwise Rotation. C.C.W. = Counterclockwise Rotation.

ial number pad in place of "H4-000000-D" as shown on the chart. Also a few of the first production 53176-DA magnetos were issued with "XH4-000000" on the serial number pad in place of "H4-000000L" as shown on the chart.

Distributor Spindle

The timing marks on the distributor gear spindle of the first magnetos were made by beveling one pinion tooth and cutting two of the distributor spindle gear teeth. The later type distributor spindle has the letters "R" and "L" molded into the end of the bakelite spindle which fits into the distributor rotor. The "R" marking is for timing clockwise rotation magnetos and the "L" mark is for timing of counterclockwise rotation magnetos. For more detailed information refer to section on timing distributor gears.

Impulse Coupling Members

The impulse coupling drive member and body will be marked with the letters "R" and "L" stamped on the parts. The letter "R" designated part is for clockwise magneto rotation and the "L" marking designates the part for the counterclockwise magneto.

Standard clockwise impulse coupling drive members will not be marked, but all special drive members which have the lugs at other than 35° below the horizontal center line of the magneto at the impulse coupling trip, will be marked by an "R" proceeded by another letter (this other letter being the one found at the end of the serial number on the frame). Thus the impulse coupling drive member for a magneto with "H-4000000-X" would be an XR impulse coupling part.

Standard counterclockwise impulse coupling drive members will be marked an "L". Special counterclockwise impulse coupling drive members will have another identifying letter preceding the letter "L" as has been explained.

In addition to the letters "L" and "R" a numeral follows the letter. This numeral back of the letters "L" and "R" will indicate the spark advance the impulse coupling member is designed to give. EXAMPLE: The spark advance is found by multiplying this numeral by 5: for instance, L-3 would be a magneto impulse coupling member for counterclockwise rotation, 5x3 or 15 degrees spark advance. All magneto impulse coupling members will be marked except the 35° clockwise part which will have no marking.

Changing Magneto Direction

In an emergency, a counterclockwise rotation magneto can be changed to clockwise and vice versa. Only four items have to be changed. These are: 1. Impulse coupling rotating unit complete; 2. Mounting flange assembly complete; 3. Rotor (or changing cam on end of rotor shaft); 4. Distributor gears (Reset only). Consult the chart above to obtain the proper impulse coupling for the respective engine. Lift out distributor spindle and match other letter ("R" or "L") with the chamfered tooth of the driver pinion.

International H-1 Magneto—General

The Model H-1 magneto is standard on all McCormick-Deering type "LA" single cylinder engines after serial numbers LAA-64086 (1½ to 2½ h.p.) and LAB-21120 (3 to 5 h.p.). It also replaces Wico Type "AH" and Splitdorf Type "RM" Edison magnetos on all Type "LA" engines without any change in engine design. It is standard on the new series "LB" engines - both hopper and radiator cooled.

The Model H-1 magneto has basically the same construction as the new H-4 model with several necessary differences for adapting it to single cylinder engine operation. The cam for breaker points has but one lobe. The distributor is eliminated and the impulse coupling drive member is replaced with a gear having clockspring type of impulse within the gear. The drive gear is marked 19° for the standard 19° of spark advance, clockwise rotation.

The magnetic circuit and operation is identical to that of the H-4.

Serial numbers on the magneto body are prefixed with "H1" for all LA and LB engines and also carry the suffix "A" after the serial number on the magnetos for the 3 to 5 h.p. engines, indicating the different gear. With the exception of the drive gears and mounting flange both engines have identical magnetos.

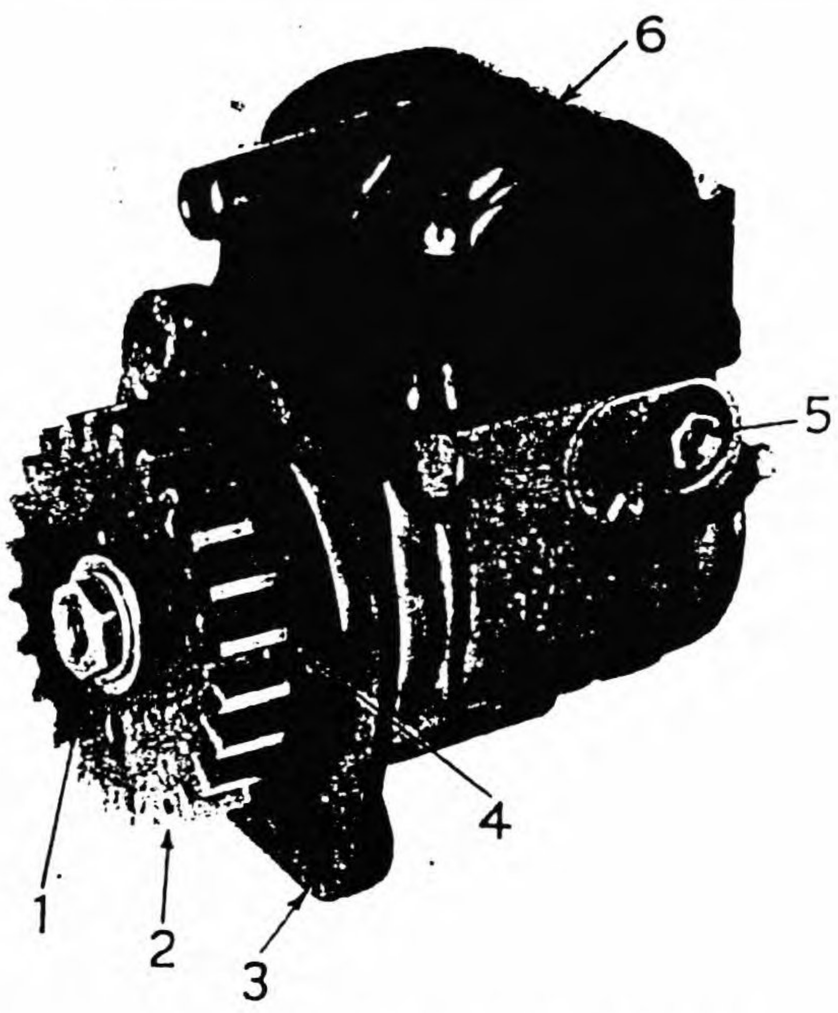

ILLUST. 114--TYPE H-1 MAGNETO COMPLETE--DRIVE END. 1--IMPULSE NUT. 2--DRIVE GEAR (MARKED TOOTH). 3--MOUNTING FLANGE WITH GASKET. 4--IMPULSE PAWL. 5--TERMINAL SCREW FOR GROUND SWITCH. 6--COIL COVER.

Breaker Points

Like the H-4, the breaker points of the H-1 magneto are completely enclosed in a compartment at the rear of the magneto. To gain access to the breaker points take out three screws (1) (Illust. 115) in rear cover (2) of magneto and remove the cover (2) and gasket. Servicing of the points is the same as outlined for the H-4, and should be adjusted to .013" when breaker is on high point of the cam.

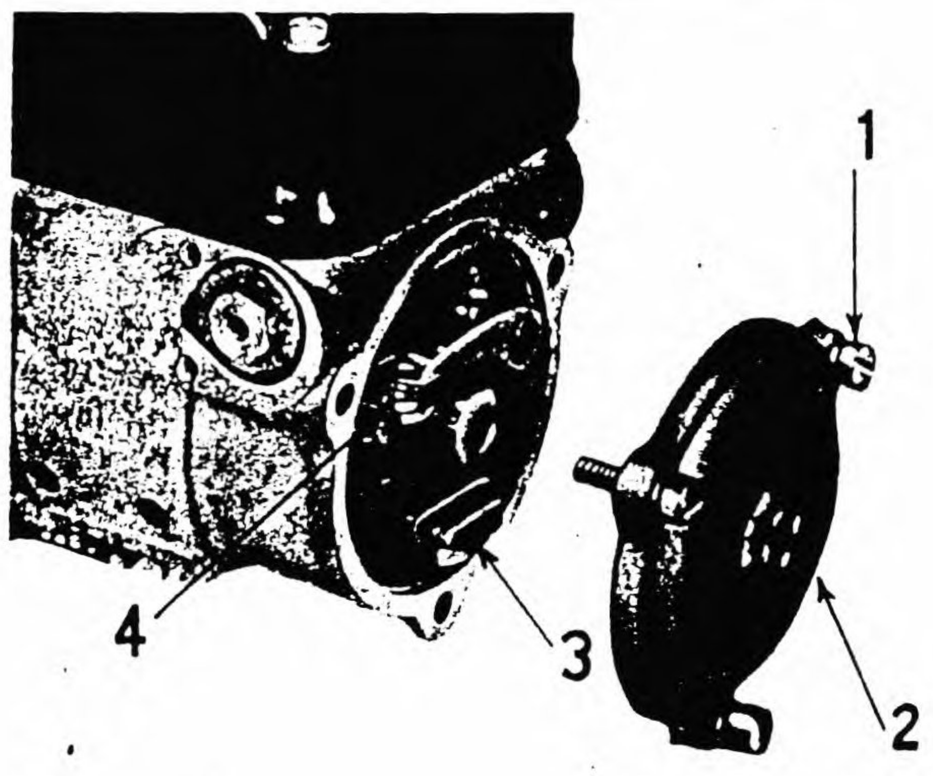

ILLUST. 115--TYPE H-1 MAGNETO WITH BREAKER-POINT COVER REMOVED. 1--SCREWS. 2--BREAKER POINT COVER. 3--SPRING ANCHOR BLOCK. 4--BREAKER POINTS.

Points open once for every revolution of the magneto or magneto runs at half engine speed.

If points are replaced, pull out the spring anchor block (3) a little way and allow the cover (2) to push it in when reassembling.

Greasing Breaker Mechanism

Before reassembling breaker mechanism, thoroughly clean all parts to remove grease and dirt. With I.H.C. magneto grease, fill the area back of the rubbing block as shown in Illust. 87 for the H-4 magneto. Use only enough grease to fill the area.

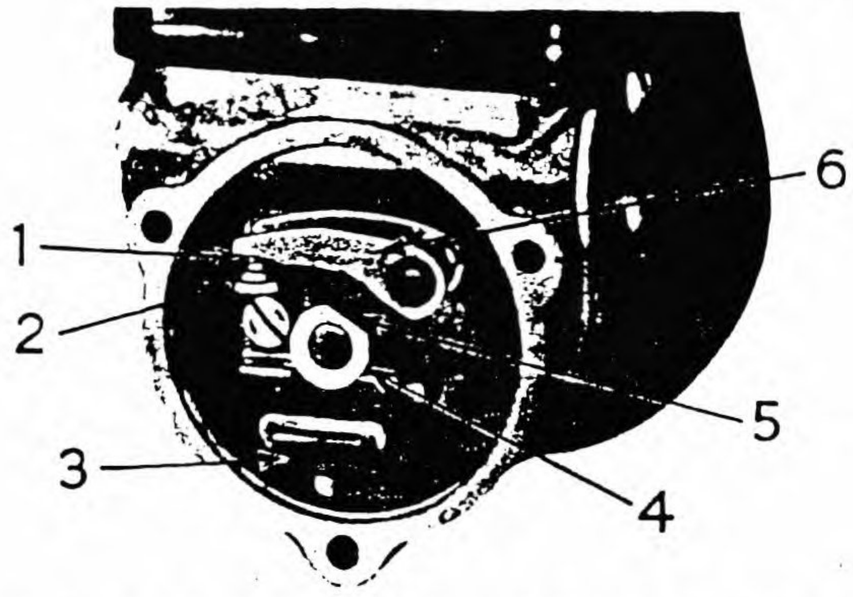

ILLUST. 116--BREAKER MECHANISM OF TYPE H-1 MAGNETO. 1--GAUGING POINT OPENING. 2--STATIONARY POINT. 3--SPRING ANCHOR BLOCK. 4--BREAKER CAM. 5--RUBBING BLOCK (NOTE GREASE). 6--MOVABLE BREAKER POINT.

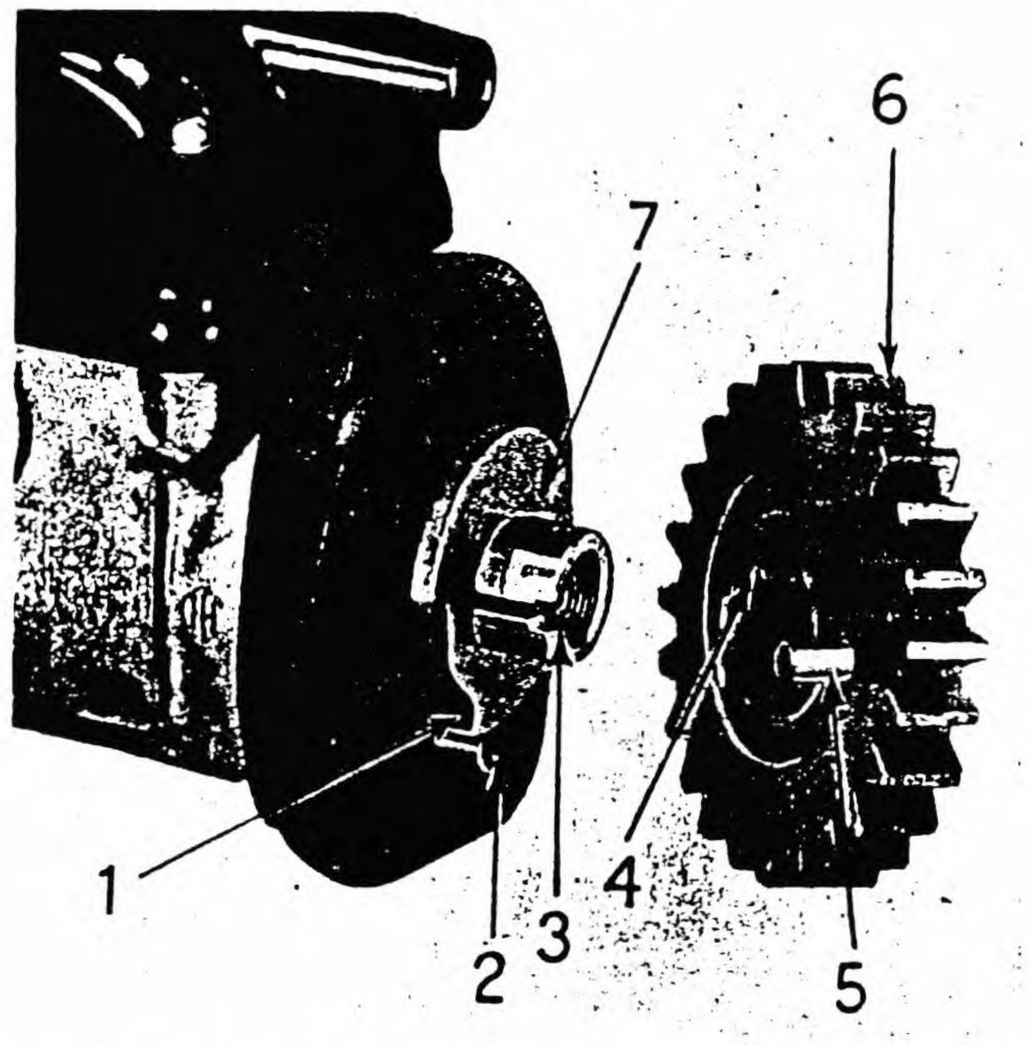

ILLUST. 118--TYPE H-1 MAGNETO WITH DRIVE GEAR REMOVED. 1--SLOT IN MAGNETO MEMBER. 2--IMPULSE STOP PIN. 3--SPRING SLOT IN MAGNETO MEMBER. 4--INNER END OF IMPULSE SPRING. 5--DRIVE PIN IN MAGNETO DRIVE GEAR. 6--MAGNETO DRIVE GEAR. 7--MAGNETO MEMBER.

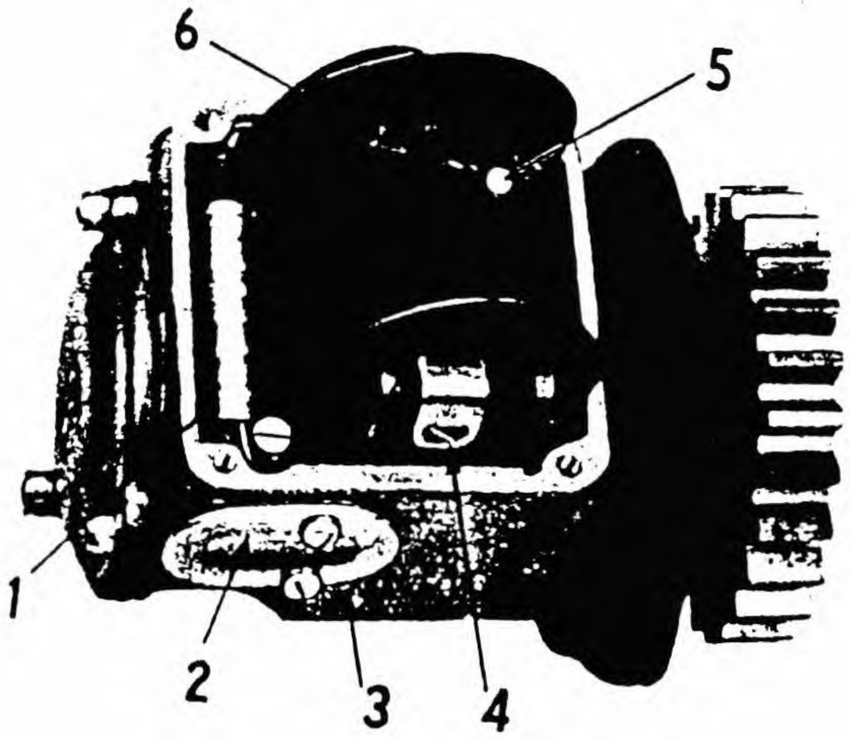

ILLUST. 117--TYPE H-1 MAGNETO WITH COIL COVER REMOVED. 1--CONDENSER. 2--CONDENSER CLAMP SCREW. 3--SIDE COVER PLATE. 4--COIL MOUNTING SCREW. 5--COIL SECONDARY LEAD-OUT. 6--COIL.

Condenser

The condenser (1) (Illust. 117), is the same as used in the H-4 and can be removed and tested by the same methods as already outlined. All H-1 magnetos have the removable plate (3) on the side opposite from the ground wire terminal connection. Remove terminal screw and outer bakelite washer; take off condenser clamp screw (2) and cover (3). Condenser can now be freed of primary wires. Slide through opening on cover side.

The testing of this condenser is the same as for the H-4 (page 46).

Coil

Coil (6) is the same type as used in the H-4 and may be serviced the same way. Coil cover has high tension lead-out (5) pointing toward the flange mounting and therefore secondary lead-out on coil must be inclined at 15° toward the flange, or opposite in direction to that of the H-4. All H-1 coils have the new construction (4) and do not require any soldering for installing a coil. The condenser terminal is on the opposite side of the magneto compared to the H-4 so the coil must be turned so that the primary wire will reach the terminal.

The coil can be tested in or out of the magneto frame as outlined on page 46. Have the poles of the magnet in vertical position when coil is out of magneto, and/or place a piece of metal across the tops of the interpoles in place of the coil core. Test coil core mounting screw length before assembling coil.

Primary wire from condenser to breaker points has rubber grommet same as that of the H-4. Refer to page 47 for details.

Impulse Coupling-

The impulse coupling and drive gear can be removed after taking off the nut on the front end of the shaft. Place an "L" shaped rod between impulse pawl (3) (Illust. 119) and the impulse coupling stop pin (2) to keep shaft from turning. Pull out gear far enough to allow pin (5), Illust. 118, in gear (6) to clear lug (1) on magneto member (7). Then allow spring to unwind. Gear can now be slipped off.

To pull the magneto member use a 1/4"

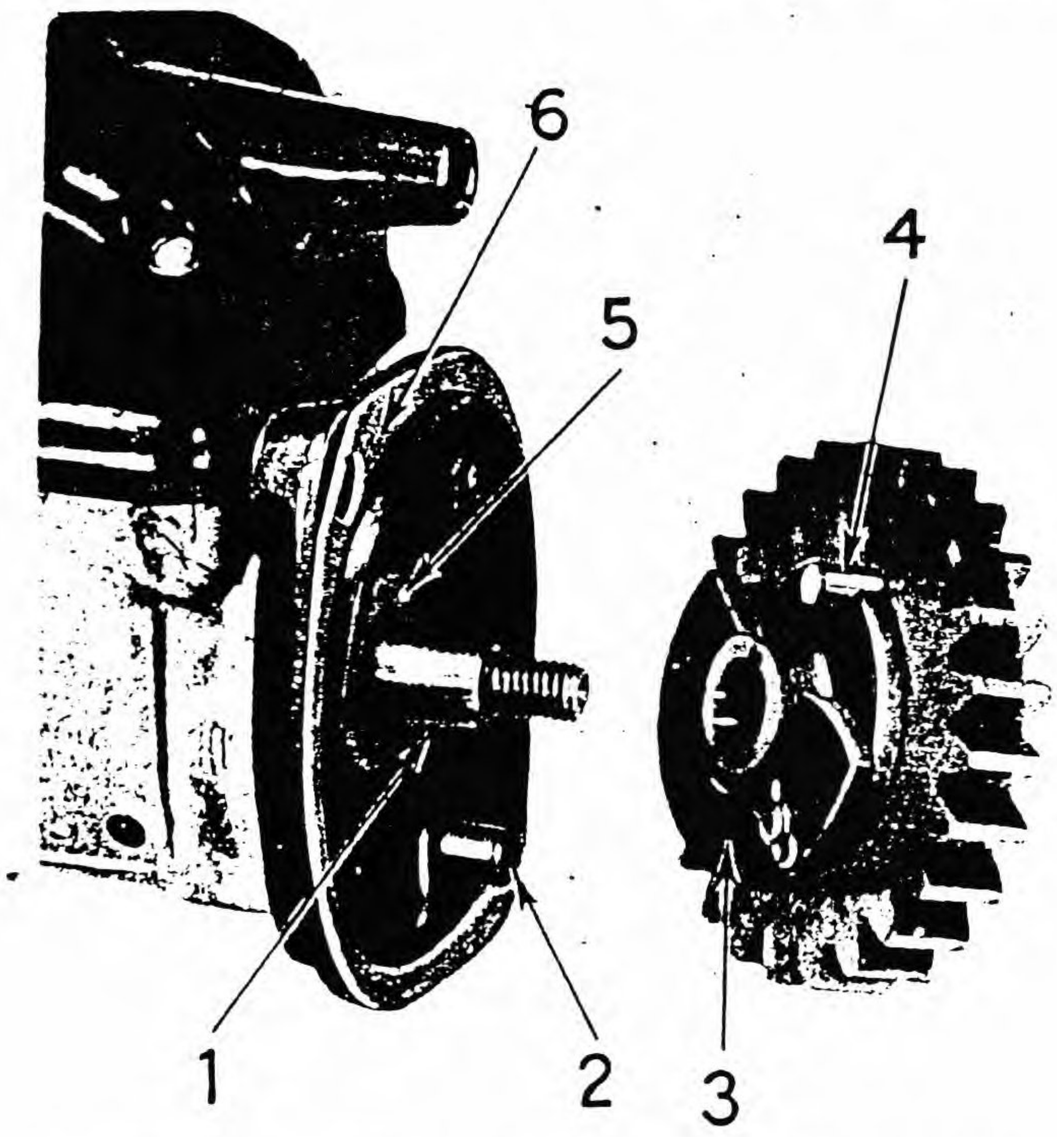

ILLUST. 119--TYPE H-1 MAGNETO WITH IMPULSE COUPLING REMOVED. 1--KEY AND ROTOR SHAFT. 2--IMPULSE STOP PIN 3--IMPULSE PAWL. 4--IMPULSE DRIVE PIN. 5--MOUNTING FLANGE OIL SEAL. 6--GASKET.

or 5/16" ball bearing inside service tool SE-912 and assemble puller to the magneto member (7). Turn puller in to draw magneto member off shaft.

Mounting flange can now be removed in order to remove rotor shaft.

When replacing impulse coupling, engage inner end of spring (4) in slot (3) in magneto member, hold peg (5) on gear out from magneto member (7), wind up spring until peg (5) drops down into space provided (1), and then slide the assembly on rotor shaft. Key (1), Illust. 119, locates magneto member on rotor shaft.

Make sure that all parts of the impulse coupling are clean. See that there is a little grease between the turns of the impulse coupling spring. Spring can be removed from drive gear by working it out of the cup with a screw driver.

To replace spring in drive gear, place magneto member (7) on magneto rotor shaft, assemble inner end (4) of spring in slot (3) in magneto member (7), and then snug up the coupling nut (1) Illust. 114. Spring should coil in a clockwise direction from the center toward the outer end. Stand magneto on wood bench with coupling end up. Place a nut about 1/4" thick over impulse stop pin (2) and turn magneto member (7) until impulse pawl (3), Illust. 119, strikes nut over pin (2).

Engage outer end of spring in notch in drive member (6) adjacent to drive lug (5). With gear in palm of the left hand, hold spring in notch with the forefinger, grip drive gear (6) with the other fingers, center the bore of drive gear down over impulse nut, and then turn magneto to tighten spring with the right hand. Lift up gear to prevent lug (5) from dropping into space (1), continue turning for one revolution and press down on gear when space (1) is again reached. Spring can be pushed all the way on by turning peg (5) to the limit of space (1). Remove nut and attach the special washer and lockwasher under the impulse nut. The nut over the impulse stop pin can be slipped off after tightening impulse nut.

Illust. 119 shows the impulse coupling complete as well as the oil seal (5) in the flange. Pin (4) keeps spring from unwinding and also limits angular deplacement of coupling with respect to the rotor. Impulse pawl (3) is held on by a spring clip. Flange gasket (6) seals oil in crankcase.

Mounting Flange and Oil Seal

Mounting flange is somewhat different from the H-4 but the oil seal and retainers are the same part numbers as those used in all H-4 magnetos. Refer to page 47 for oil seal replacement procedure. Attach flange (6) as pictured in Illust. 119, with impulse stop pin (2) at the bottom.

Rotor Bearings

The rotor magnet is similar to that used in the H-4; the magneto is shorter and the distributor system is eliminated. Bearings are the pre-loaded type at time of installation. Method of replacement is covered on page 48. Use keeper 57314-D when magnet is not assembled in magneto.

Thoroughly clean bearings and magnet before replacing them as particles are liable to jam between the magnet and the pole pieces of the core where the clearance is very small. Use compressed air as a final cleaning of the rotor.

Bearing races can be replaced the same as those in the H-4 by the methods outlined on page 49 and as demonstrated on page 23.

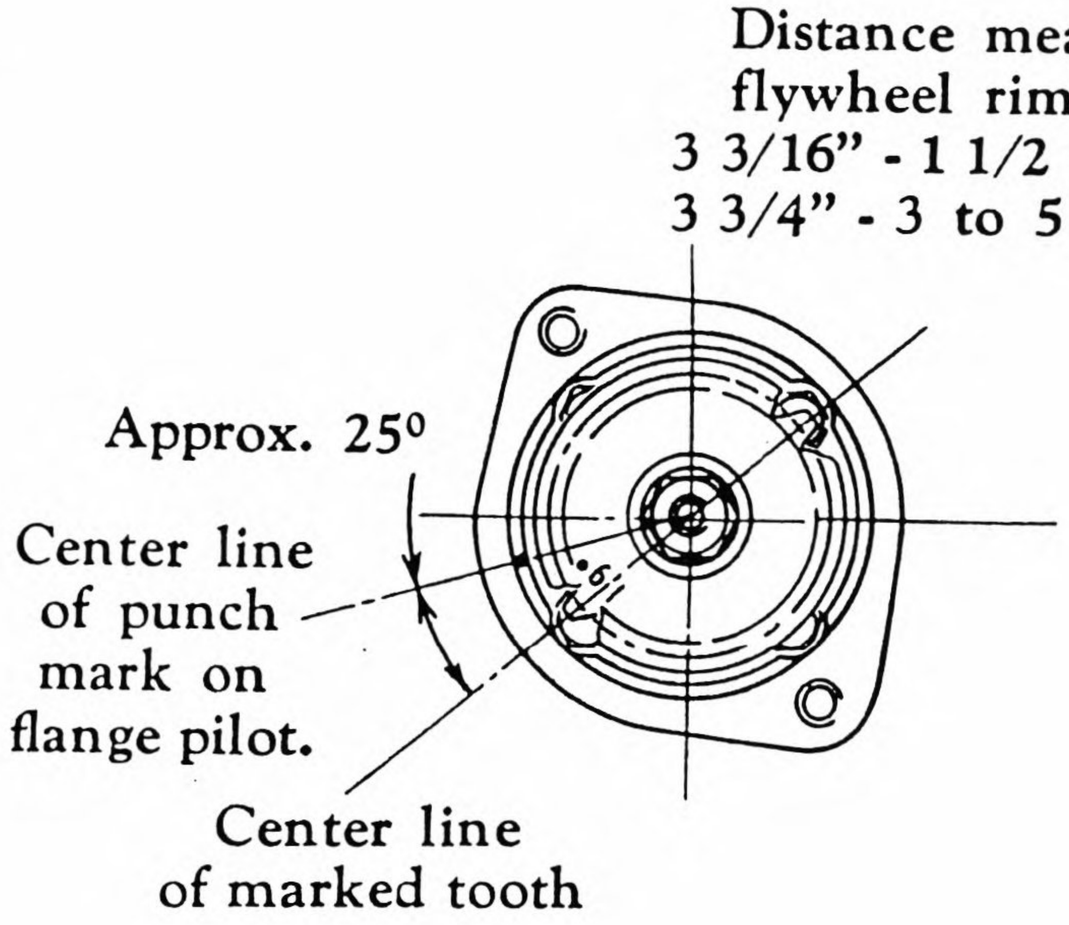

ILLUST. 120 (a)--VIEW OF MAGNETO WHEN ROTOR IS HELD IN STABLE POSITION BY MAGNETIC FIELD.

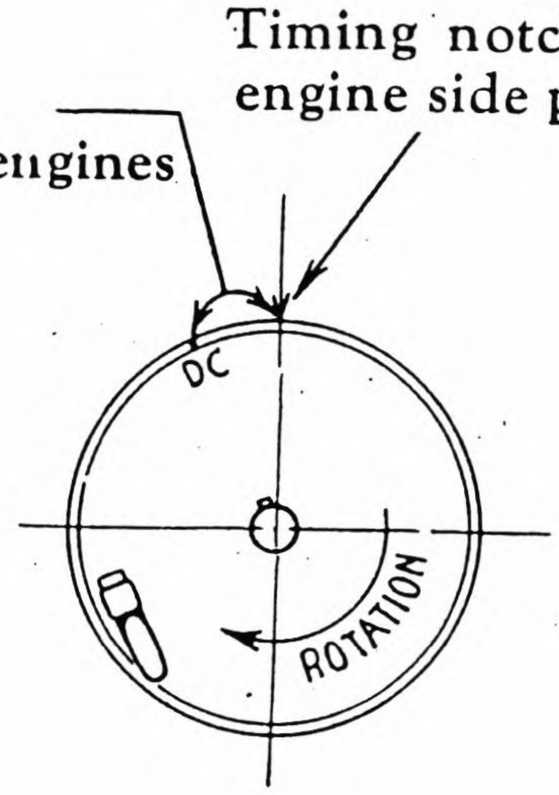

ILLUST. 120 (b)--VIEW OF ENGINE FLYWHEEL IN POSITION FOR ASSEMBLY OF MAGNETO WITH ROTOR IN STABLE POSITION.

Breaker Cam

Breaker cam is located on rotor shaft with a key like that used on H-4 clockwise magnetos. If replacement is necessary it can be removed as outlined on page 49. Cam is extremely hard and should never require replacement.

Timing Magneto To Engine

Magneto may be timed to the engine by placing "DC" on flywheel in line with the timing notch on side plate of the engine and inserting magneto into place with marked tooth of magneto gear held in line with punch mark on the magneto flange. (Marked tooth is stamped 19°).

Refer to Illust. 120-A and 120-B for an easier method of timing the magneto to the engine. Place the flywheel in the position shown in Illust. 120-B with the "DC" mark 3-3/16" behind the timing notch on engine side plate (3-3/4" for 3 to 5 h.p. engine). Turn magneto gear marked tooth (19°) to the stable position shown in Illust. 120-A and insert magneto in its mounting hole so gears mesh. Then tighten the magneto screws lightly so magneto can be rocked.

Magneto can be tipped forward and backward to make the impulse coupling trip exactly on the "DC" timing mark.

When checking the magneto for the point of tripping of the impulse coupling, disconnect high tension wire, take a firm grip on the flywheel handle, and move flywheel slowly and surely to determine the exact point of tripping. Never allow the magneto impulse coupling to trip before the "DC" mark.