WICO TYPE "EK" MAGNETO

To recharge magneto, hold magneto in upright position, turn drive gear until impulse trip arm contacts impulse stop; then turn gear back until cotter pinhole in end of shaft for impulse gear nut is in horizontal position. Curved end of magnet is a south pole. Magnets are now in correct position for charging. Make sure not to change this position and place complete magneto between charging bars as shown in Illust. 132. Be sure to complete the circuit by placing a keeper across the charging bars while closing the switch. Switch need only be closed a few seconds.

Timing Wico Type "H" and "AH" Magnetos to "LA" Engine

Align the "DC" mark on flywheel with the timing notch on side plate when engine is on the compression stroke. The compression stroke may be determined by placing the finger over the spark plug hole and cranking engine in a clockwise direction. When air blows past finger, the engine is on compression stroke.

Align the marked tooth on magneto gear with mark on magneto flange, and, without disturbing this setting, insert magneto into its mounting hole so magneto gear meshes with cam gear. Then tighten the magneto screws lightly so magneto can be rocked. Impulse coupling can be made to trip exactly at the time the "DC" mark on flywheel is in line with timing notch on side plate by tipping the magneto forward and backward. Then tighten the magneto screws.

Wico Type "EK" Magneto—General

Wico type "EK" high tension magnetos are used on the 1-1/2, 3, 6 and 10 H.P. McCormick-Deering stationary engines. These magnetos should require very little service and will give thousands of hours of trouble-free performance if working parts are kept clean and well oiled as outlined in the Instruction Book.

Breaker Points

The two side covers of the magneto are held in place by a cover band which is fastened by four screws. Removal of these screws allows band and covers to be taken off. Breaker point contacts should just be open when the armature is about 3/32" away from cores. To adjust contacts, withdraw the moving parts and loosen locknut (3), Illust. 134, on stem of breaker point. Replace the moving parts and insert two 3/32" thick metal strips between armature and face of

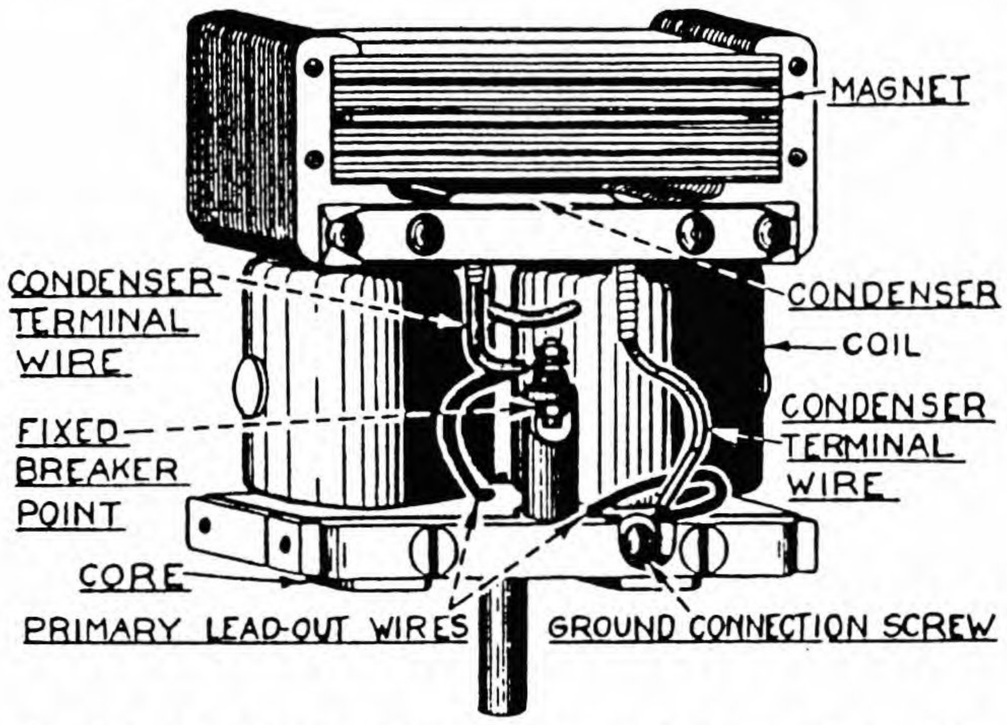

ILLUST. 133--WICO TYPE "EK" MAGNETO WITH COVERS OFF AND MOVING PARTS REMOVED. NAMES OF THE MORE IMPORTANT PARTS ARE SHOWN.

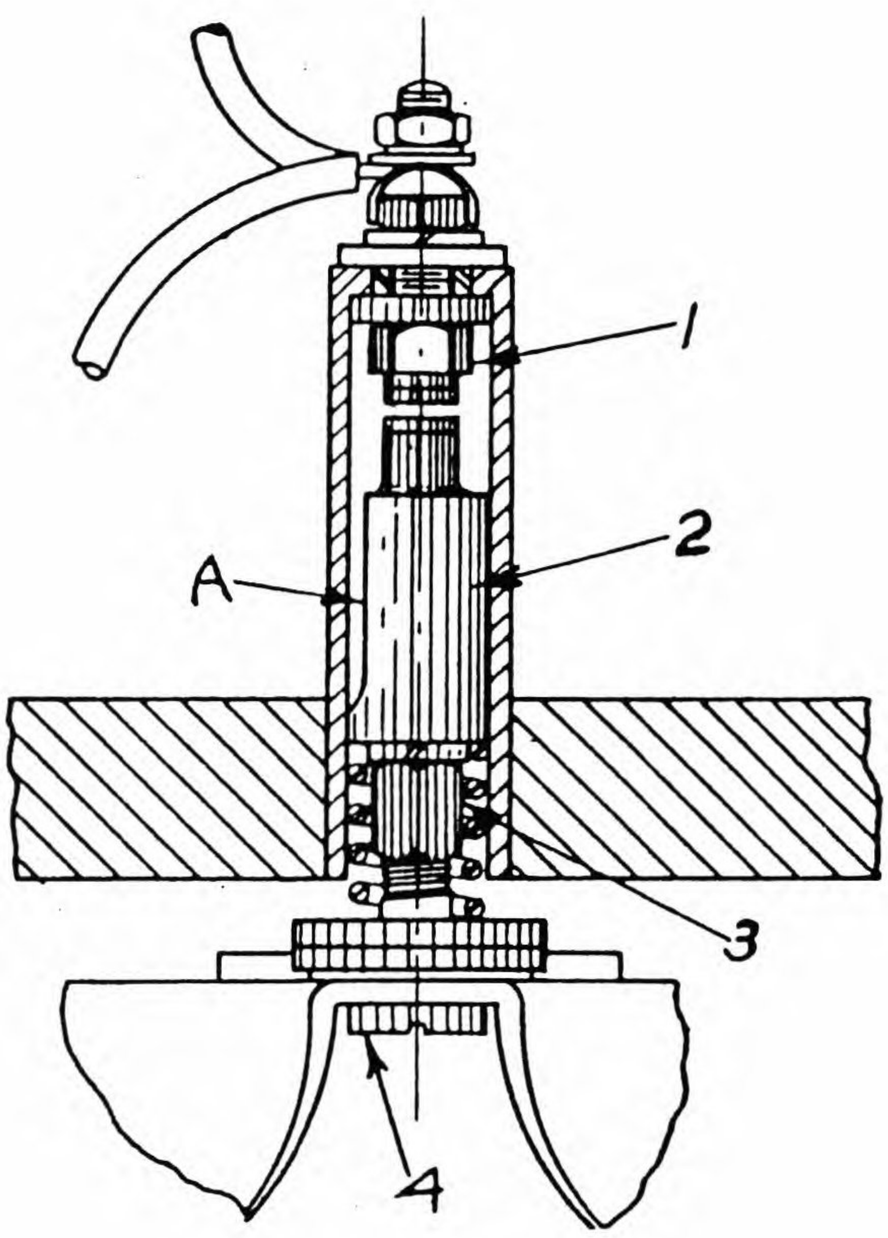

ILLUST. 134--WICO "EK" BREAKER POINT DETAILS.

cores. Hold the contact (2) from turning by inserting a key in slot (A) in its side. Turn screw (4) until contact (2) just fails to touch contact (1). Then remove the armature from the magneto and draw up nut (3) against lockwasher and contact, taking care screw does not turn in contact while doing this. Replace armature and check adjustment. Be sure to remove metal strips when breaker points are properly adjusted.

Charging Wico Type "EK" Magneto-

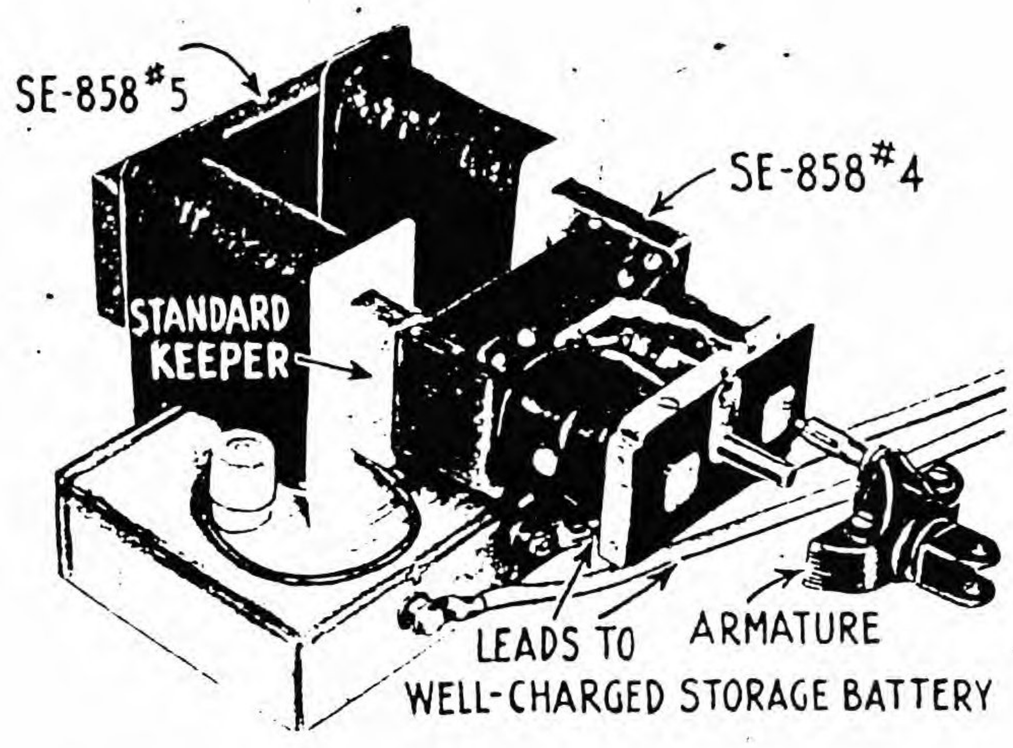

ILLUST. 135--WICO "EK" MAGNETO BEING RECHARGED WITH SE-858 SPOOL TYPE MAGNETIZER.

Wico "EK" magneto can be recharged on a spool type magnetizer (SE-858) as shown in Illust. 135. On earlier spool magnetizers it is necessary to spread the spools 1/4" farther apart as was necessary when recharging the Wico "H" type magneto. (See Page 66.) It is necessary to have two charging bars (SE-858 No. 4 and SE-858 No. 5) and the standard keeper to properly recharge the Wico "EK" magneto on the spool type magnetizer. Connect magnetizer to a well charged storage battery, making sure the terminal marks (+ and —) of the magnetizer and storage battery correspond. Remove the cover band and two side covers from the magneto. Then place the magneto in the position to the charging bars as shown in Illust. 135. Remove the armature from the core, and place bar SE-858 No. 5 across opposite end of the charging bars, to complete the magnetic circuit. Close the electric circuit by forcing down on the switch, for only a few seconds. Before removing the magneto from the charger replace the armature. If this is not done, the magnets will lose part of their magnetism. If the armature is left in place while charging with this type of magnetizer, the magnets do not become completely saturated. When magnets are fully charged, it will take from 65 to 70 lbs. pull to remove the armature.

Testing Magneto Coil

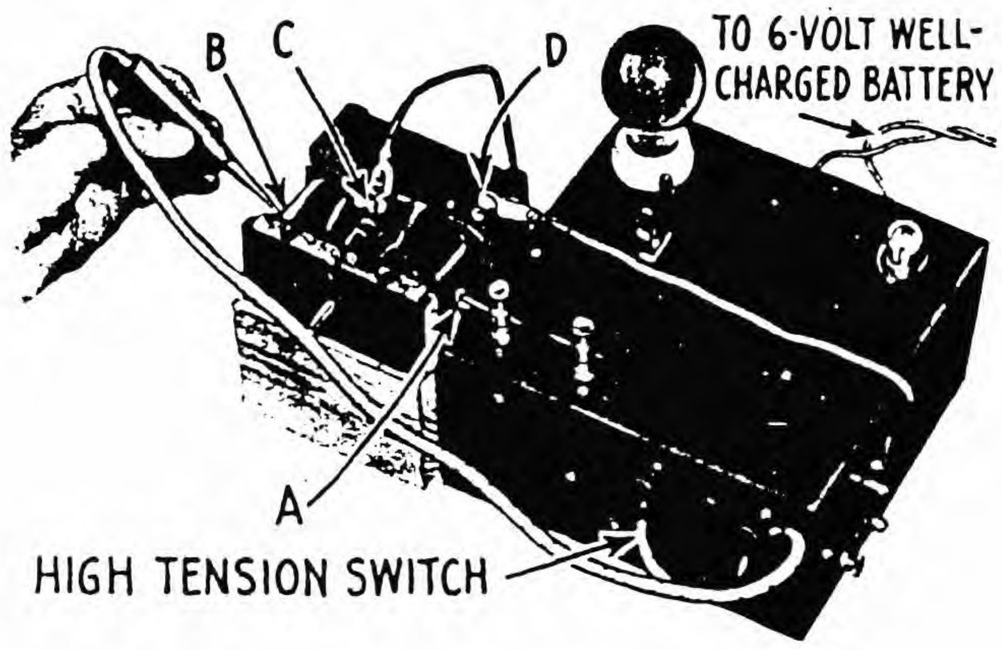

ILLUST. 136--TESTING MAGNETO COIL ON ELECTRICAL TEST SET SE-846.

Have vibrator switch "off" and high tension switch connected to armature terminal (see illust.). Place magneto, with covers and armature removed, next to electrical test set box with coil secondary lead-out button "A" firmly against back end of gap pointer. Clip one winding test lead on breaker point nut "C" and other test lead to frame of magneto "D". Have high tension test point lead connected to "armature" terminal and hold test point end firmly against coil secondary lead-out button "B". Snap on vibrator switch. A good spark should jump a 3/16" test gap. It is necessary to recharge the magneto after testing the coil with an electrical test set. Testing the coil will break down the magnetic lines of force in the magnet.

Testing Condenser

Remove ground connection screw which releases condenser terminal wire. (See Illust. 133 for identification of parts.) Condenser can then be tested for short and open circuit using condenser terminal wire and fixed breaker point screw for lead-outs. Use 110 or 220-volt circuit of electrical test set SE-846 as explained on Page 15, or Neon condenser test set SE-1065 shown on Page 15.