SERVICE INSTRUCTIONS FOR MODEL A WICO MAGNETO

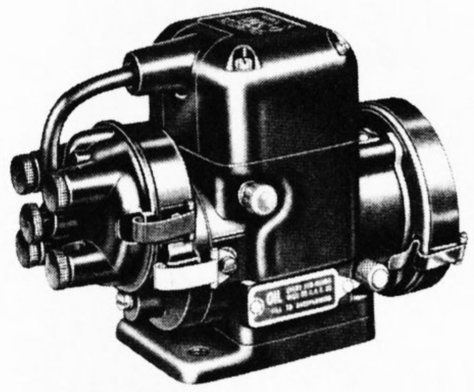

MODEL A
WICO MAGNETO

INDEX

Breaker Box 3
Breaker Points 2
Cam 2
Coil 3
Condenser 2
Cover 2
Distributor Arm 2
Distributor Cap 2
Drive Cup 4
Drive Cup, Adjustable 7
Drive Spring 6
Driven Flange 7
Dust Cover 4
End Plate 7
Gear Housing 2
Impulse Coupling 4
Impulse Coupling Lock-nut 4
Lag Angle Adjustment 7
Main Housing 8
Oiling System Parts 8
Rotor 8
Stop Devices 3
Trip Arm 7

Revision #1, January 15, 1945 — Replaces Original

DISTRIBUTOR CAP AND DISTRIBUTOR ARM

SINGLE CYLINDER MODEL

On single cylinder models neither distributor cap nor distributor arm are used as the high tension current is taken directly from the secondary terminal of the coil through the outlet in the cover of the magneto. The breaker compartment is covered by breaker cover 2074 which is held in place by 2 breaker box cover clips, X2075.

To replace an old style breaker box cover, X1546, which has the clip on the cover, use the new cover 2074 and gasket 2072 and install two X2075 breaker box clips to the housing.

R CYLINDER MODEL

On R cylinder magnetos, which are two cylinder magnetos with the spark occuring every 180° of the magneto drive shaft rotation no distributor gears are used.

The distributor cap is removed by wedging out the two clips which hold it in place.

TWO AND FOUR CYLINDER MODELS

On two and four cylinder magnetos the distributor cap is held to the gear housing by two spring clips and it is necessary to wedge these out with a screw driver before the cap can be removed. The distributor arm is fastened to the gear housing and may be removed by pulling off the shaft. For information regarding the removal of the gear housing see below.

GEAR HOUSING

After the distributor cap has been removed as mentioned above, gear housing may be taken off by wedging out with a screw driver the two spring clips X1503. When replacing the gear housing make certain that the key in the gear shaft of the housing lines up with the slot in the rotor shaft of the magneto and that the gear housing gasket is in place between the housing and the cover. The oil plug, 16-449, at the bottom of the gear housing should be removed and a small amount of SAE 20 oil should be applied.

As shown in the service parts section of this manual the gear housing is supplied without distributor arm as X5292.

BREAKER POINTS

The breaker points should be adjusted to .015" when fully opened. Adjustment is made by shifting the fixed contact, 1196, by means of the small eccentric screw. After adjustment, tighten the fixed contact screw, M-31X.

The points should be free from foreign matter. Lacquer thinner is an ideal cleaner for this purpose. Use Wico tool X5449 to adjust the alignment so that both surfaces of both contacts meet squarely.

To remove the breaker arm, X1408, take out the breaker arm clamp screw, 16-738, lock washer, M-55XA, clamp washer, 1207, and breaker arm spring terminal screw, 16-738, and lock washer, 2573. Next pull the breaker arm and the breaker arm spacer, 1418, off the pivot. When replacing make certain that the leads from the coil and stop device are in place under the breaker arm spring terminal screw.

To remove the fixed contact 1196 the breaker arm must first be removed as outlined above. Then take off the spacing washer, 1197, remove the clamp screw M-31X, lock washer M-55XA, and washer IXA-356, after which the fixed contact may be pulled off the breaker arm pivot.

If the points need replacing it is recommended that both the fixed contact and the breaker arm be replaced at the same time. After reassembling the points should be adjusted as described in the beginning of this section.

CONDENSER

The condenser, X1413, should have a capacity of 16-.18 microfarads. If the condenser when tested shows to be below capacity it should be replaced.

To remove the condenser, X1413, disconnect the ground and coil leads by removing the breaker arm spring clamp screw, 16-738, and washer. After removing the two condenser screws, 1383, and lock washers, M-90X, the condenser may be removed by sliding it slightly away from the breaker arm pivot and pulling it upward. In replacing the condenser make certain that the condenser case gasket, 1533, is in place and that the coil and ground lead is firmly fastened.

CAM

The breaker cam may be pulled off the rotor after removing cam screw, M-31X, lock plate, 1381, and lock washer, M-55XA.

The Part numbers for the various cams are given in the service parts section of the manual together with illustrations for identifying them.

COVER

The cover may be removed by loosening the four screws, one in each corner of the cover, until they are free. It is not necessary to completely remove the screws from the cover. If the cover seems to stick it may be loosened by slightly tapping with the palm of the hand.

When replacing the cover make certain that the gasket, 1385, is in place.

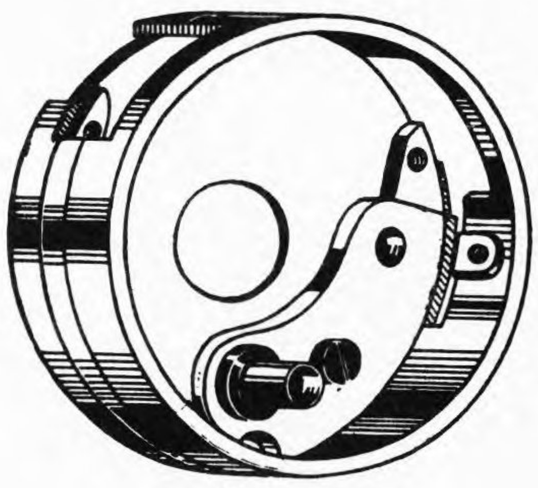

X2175

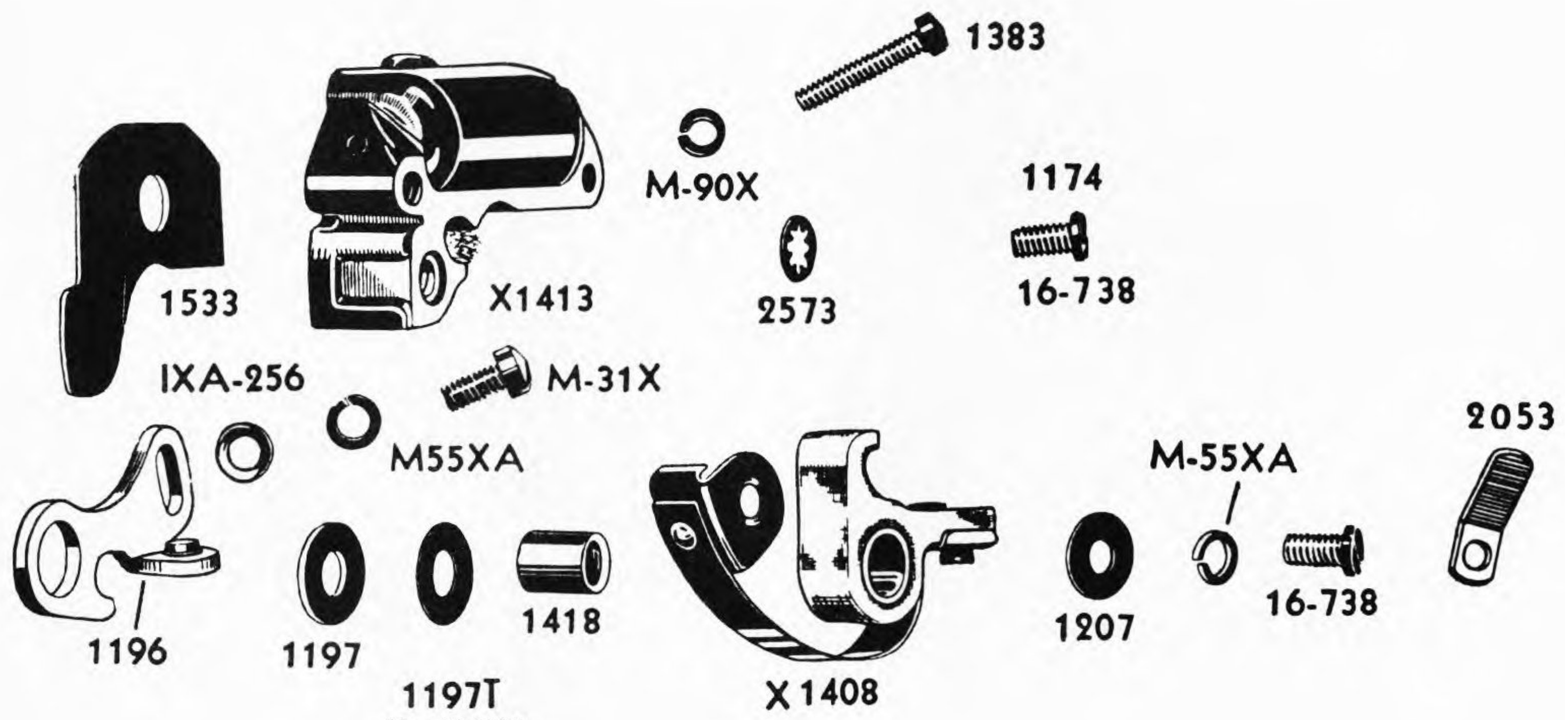

Assembly of Breaker and Condenser Parts to Breaker Box

COIL

TESTING

It is not necessary to remove the coil from the magneto when testing the coil. When using an Eiseman coil tester, connect the ground lead of the tester to the housing of the magneto; connect the breaker lead of the tester to the breaker arm spring terminal screw of the magneto; connect the spark lead of the tester to the high tension terminal on the coil; turn the cam until the breaker points are open. The coil must be replaced if it requires more than 1.5 amperes to give a steady spark on a 5 mm. gap.

REMOVAL OF COIL AND COIL CORE

With the magneto cover off remove the two fillister head screws, M-126XB, holding the coil core clamps, 1384, in place. Under one of the coil core clamps is found the ground end of the primary and secondary of the coil. Turn the rotor until the magnetism no longer grips the coil core to the main housing. Pull the coil and coil core free. When replacing the coil and coil core on the magneto be sure the ground surface of the core is against the laminated cores of the housing and the primary and secondary ground lead.

When the coil is in place the coil terminal should be up and toward the breaker points. The surface of this contact must be clean.

REMOVAL OF COIL FROM CORE

The coil, X2766, is held to the coil core, X2706, by two wedges, 2264B. It is therefore necessary to press against the coil core with considerable force to remove it from the coil. Be careful when removing the core from the coil that the coil is supported in such a way that there is no danger of the primary of the coil being pushed out of the secondary.

When replacing a coil on the coil core, slide it on, being sure that the finished side of the core is down and the high-tension button on the coil is up. Then, on the finished side of the core, press in the two wedges, one on each side, until they are flush with the primary coil winding.

BREAKER BOX

The breaker box may be removed from the housing, either with the condenser and breaker points in place or not. First remove the two screws which hold the cover clips or gear housing clips to the side of the main housing and at the same time hold the breaker box in place. With the two breaker box screws remove from the side of the magneto, next remove the primary breaker lead by taking out the screw which clamps the lead and the breaker arm spring. Draw the breaker box out carefully, allowing the primary breaker lead to slide back out through the opening made for it in the side of the box. The same care must be taken when putting the breaker box back in place. Line up the locating mark on the breaker box with the mark on the main housing.

STOP DEVICES

There are three different types of stop devices for the model A Wico magneto, all of which serve the same fundamental purpose, that of rendering the magneto inoperative by short-circuiting the primary circuit and thus stopping the engine. The illustration at right shows

these three different types of stop devices and distinctly illustrates the manner in which they are assembled to the housing. In all cases the two small fibre washers, M-34X, are inserted into the hole in the side of the main housing. All of the parts below the two M-34X washers are assembled on the inside of the magneto. All parts above the two M-34X washers are assembled from the outside of the magneto. Each of these stop devices is available as a replacement kit. Each kit contains all of the parts necessary for completely replacing the stop device of that type.

The first type of stop device shown is the stop-button. To operate the stop button it is merely necessary to press upon the red stop button, A-138XA, and hold it in until the engine stops, merely a matter of seconds. When the stop button is released the circuit is again opened and the engine is ready to start. The complete replacement kit for the standard stop-button is available under the part number X4802.

The standard ground stud is the second assembly shown. It is used when it is desired to remotely control the magneto, i.e., by attaching a wire to the ground stud and leading it to a control switch, the other side of which is grounded, the magneto may be remotely controlled from any distance.

The third assembly shown is the Wisconsin type stop button. The black nut, 1992B, is rotated to the left on the left-hand threaded stud, 4631, which pushes grounding sleeve 16-368 into contact with the housing, thus short-circuiting the primary. The magneto remains inoperative until the stop nut is rotated to the right, thus opening the circuit.

The Wisconsin type stop-button is of distinct advantage on equipment such as rail cars where the engine is geared directly to the wheels as the regular stop-button would not provide positive stopping for as soon as the stop-button was released the engine would again start from the momentum of the car. This is not true with the Wisconsin type stop-button. On equipment which does not have to meet the above requirements, it is perfectly satisfactory to replace the Wisconsin type stop-button with the regular Wico stop-button.

All model A replacement housings are supplied with ground studs, both right and left sides. These may be converted into either standard stop-button or standard ground connections by the addition of the parts comprised in group A-140X group for the stop-button and A-155 in the case of the ground connection. When replacing any of the above stop devices it is necessary to remove the cover and the coil to gain access to the inside of the housing. Although it is recommended that complete replacement kits be ordered, all of the parts are available singly.

DUST COVER

If the magneto is equipped with a dust cover, it may be removed by wedging open the spring clips of 16-X913 and the other parts may then be removed from the magneto in the order shown. When reassebling it is recommended that gasket 16-914 be replaced.

IMPULSE COUPLING

IMPULSE COUPLING LOCK-NUT

The impulse coupling lock nut is best removed by using Wico tool number S4704. The impulse nut has a right hand thread and therefore, and in order to unscrew it on a magneto of clockwise rotation, it is necessary to insert Wico tool 1820 between the driven flange and the drive cup to prevent the rotor shaft from turning while the nut is being loosened. On a magneto of counterclockwise rotation, it is necessary only to turn the magneto over until the trip arm is against the impulse stop.

There are two standard impulse lock nuts. The first is number 16-491C, which is used on magnetos which do not have a drive gear. The second impulse lock nut is 2076. and is used on magnetos which employ a drive gear in addition to the drive cup.

There is one special impulse lock nut 2586 used on Hercules specification A-970.

When re-assembling impulse lock nut it will be necessary to use Wico tool 1820 on machines of counterclockwise rotations but on magnetos of clockwise rotation it is only necessary to tighten the nut with the trip arm against the impulse stop.

DRIVE CUP AND DRIVE SPRING

To remove the drive cup, after having removed the impulse lock nut, with the drive spring, 15-186, turn the drive cup in the direction of the proper magneto rotation until the trip arm latches against the impulse stop. Continue to turn the cup until the projection of the cup has cleared the projection on the driven flange. Without the friction of these parts against each other the cup can be pulled out far enough to allow it to unwind. A firm grip should be taken on the cup to prevent possible injury to the hand. Then, pull the cup with the spring still in it, off the shaft.



DRIVE CUP WITH SPRING

To remove the impulse drive spring from the drive cup it is merely necessary to work the spring out of the cup with a screw driver.

In replacing the drive spring, locate the spring over the cup so that the outer eye in the spring is over the slot provided inside wall of the cup. For a clockwise mag-

STOP DEVICES FOR MODEL A

Number at bottom of each line is number of replacement kit which includes all of the parts shown in the line above it.


A-138XA


A-142X


A-139X


A-170X


16-369


M-54X


M-72X


M-33X

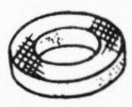
M-35X


M-34X


M-34X

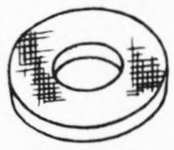
1XA-862

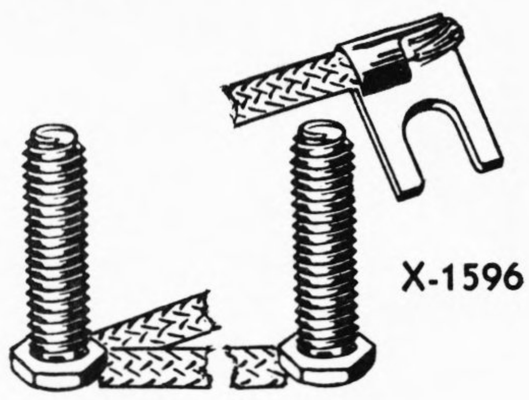
X-1596

STANDARD
STOP BUTTON
X4802



16-463


M-55X A


M-33X


M-72X


M-33X

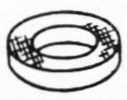
M-35X


M-34X

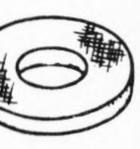
IXA-862

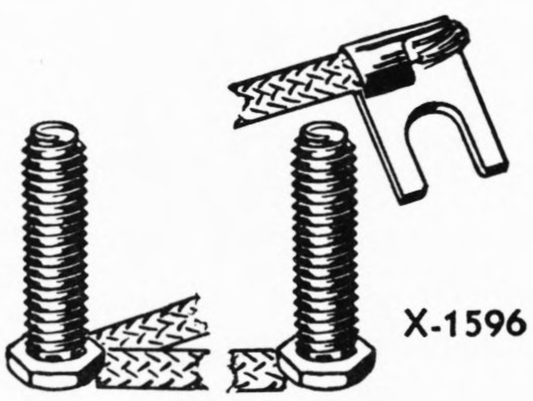
X-1596

STANDARD
GROUND
CONNECTION
X4803


M-95X



1992B


16-368


16-369


1991


M-33X


M-35X


M-34X


M-34X

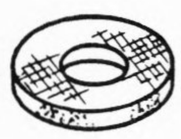
1XA-862


X-2398


1990

WISCONSIN TYPE
STOP BUTTON
X4804

neto, the spring should be installed so that the turns spiral in toward the inner eye in a clockwise direction. For a magneto of counterclockwise direction, it should be just reversed, i.e., the spring should spiral inwards in a counterclockwise direction.

The model A drive cup can be used interchangeably on magnetos of clockwise or counterclockwise rotation. Some of the earlier drive cups had two holes in the outside wall, one for clockwise rotation and one for counterclockwise rotation. When using one of these drive cups with two holes, to determine the correct slot for a given rotation, hold the drive cup so that the two slots are horizontal and on top. The slot for the clockwise rotation is then on the left and the slot for the counterclockwise rotation is on the right. If the correct slot is used, the spring will start in one slot and pass the second before it has made a quarter of a turn. When using the newer drive cups the same hole is used for both rotations.

To replace the drive spring in the drive cup insert the outer eye of the spring as far as possible into the proper slot. Next, take the drive cup spacer, 16-583, which contains the slot for the inner eye, insert a large screw driver in the center hole, so it will bind, and the drive cup spacer can be turned with the screw driver acting as a handle. Insert the inner eye of the spring in the drive cup spacer slot and wind the spring around the spacer until the spiral closes sufficiently to allow the spring to slide inside the drive cup. This method of winding the spring eliminates any possibility of distorting or scratching the spring surface. The spring may be more easily inserted if the lugs of the drive cup are securely held in a vise.

To reassemble the drive cup and spring to the magneto proceed as follows: first make certain that all parts are clean and there is grease between the turns of the impulse drive spring. Then put the brass and steel spacing washers into the drive cup with the inner eye, the springs and the notch provided in the washer. Now place the drive cup with the spring and the spacing washers on the shaft. Press the parts together, hold the impulse cup out far enough so that the projection on the drive cup clears the flange and then give the cup a full turn as follows: make a half turn and allow the cup projections to lock against the driven flange, then, with a fresh hold on the drive cup, make the other half turn. When the cup is wound, press it firmly into place and apply a small amount of grease to the bearing service of the impulse lock nut.

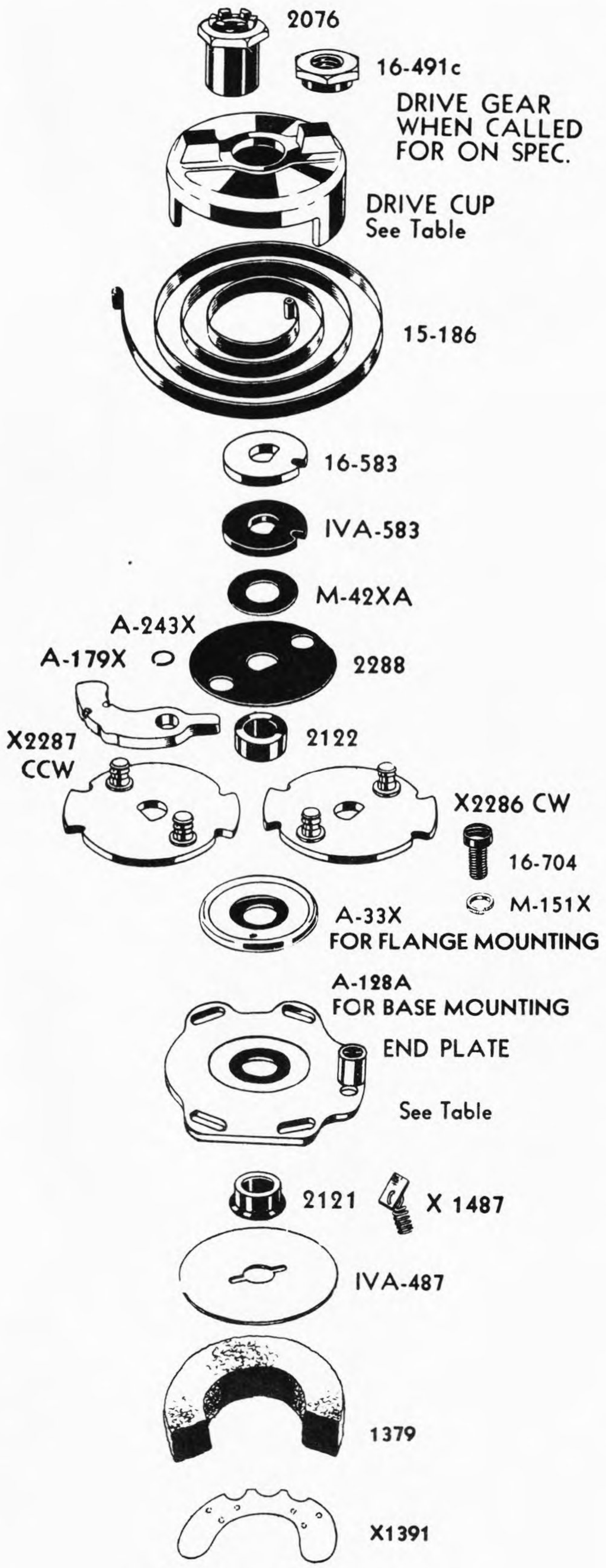

Assembly of Impulse Parts

ADJUSTABLE DRIVE CUP

Model A specifications, A-19, A-20 A-22 and A-23 have an adjustable impulse coupling which enables the lug angle on the drive cup to be set at any degree.

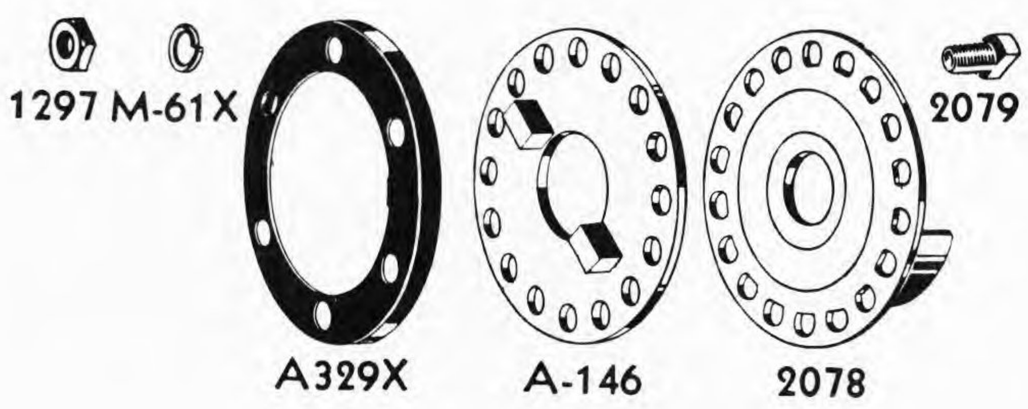

Occasionally this adjustable drive cup can be used on magnetos of other specification to adapt standard model A specifications to fit unusual engine applications.

DRIVEN FLANGE GROUP AND TRIP ARMS

After having removed the impulse lock nut, drive cup, drive spring and various spacing washers, the driven flange group may be removed. If the flange sticks, insert two screw drivers 180° apart under the flange and gently pry it off. When replacing the driven flange group make certain that it is pressed on to the shaft as far as it will go. Since the flat on the rotor shaft is slightly tapered, being larger at the rotor end of the shaft, it is often necessary to press the driven flange on with considerable force or to gently tap it into place with a soft-headed hammer.

There are two different driven flange groups, one for each rotation. They are easily identified in the following manner. Hold the driven flange group with the trip arm pins facing you. Turn the driven flange group so that the flat is downward. If the flat is then on the right hand side, the driven flange is for a magneto of clockwise rotation. If the flat is on the left-hand side, the driven flange is for a magneto of counterclockwise rotation.

Driven flange groups are furnished without the trip arms.

Early Model A magnetos were built with a light trip arm and driven flange group. These are easily identified as the trip arms were riveted to the driven flange and cannot be removed. When replacing the light trip arm impulse the regular model A driven flange X1628 CW, X1629 CCW should be used or the Model C driven flanges X2286 CW, X2287 CCW which can be used in the Model A as well as in Model C.

When changing from light to heavy trip arms it is necessary to furnish a new drive cup to compensate for the additional thickness of the new parts. The correct drive cup may be determined from the table of variable parts in the Model A service parts section.

TRIP ARM

On one and two cylinder magnetos only one trip arm is required. On R and four cylinder magnetos two trip arms are necessary. Thus, by having driven flange groups of both rotations, together with a supply of trip arms, the correct driven flange assembly may be made up for any model A magneto.

To remove a trip arm, clamp the driven flange in a vise, push the point of a knife between the snap ring A-243X and the trip arm pivot, near the opening of the snap ring. This will spring the snap ring a little and then, by inserting a knife in between the snap ring and pivot as far from the opening as possible, the ring may be pulled off. Now the trip arm, A-179X, may be taken off. It is recommended that a new snap ring be used if the old one becomes damaged in the process of removal.

The simplest method of putting on a new snap ring is to take a socket wrench, or a similar device of a size slightly larger than the pivot. Put the ring on the pivot and press down on the ring with the open end of the socket wrench.

END PLATE

In order to remove the end-plate, the impulse coupling must be removed as previously instructed. Take out the four fillister head screws which fasten the end plate to the main housing. Be careful not to damage the gasket between the end-plate and main housing. On the standard base-mounted machines a line is stamped on the end plate which matches a similar line on the main housing. This is a guide to putting the end-plate back to give proper timing. In replacing the end plate make sure that the oil seal fits properly and that the end-plate gasket is in place. The mounting screw holes in the end-plate are elongated for adjustment of the lag angle. For machines previously timed, set identification marks together as mentioned above.

LAG ANGLE ADJUSTMENT

Any impulse lag angle from 5° to 36° can be obtained by changing the angular position of the impulse stop. The holes through which the end plate screws pass are elongated 10°. There are also three different holes in which the impulse stop can be fastened. By placing the impulse stop, 16-570 in the top hole and shifting the end plate in its slots, any lag angle from 5° to 15° can be obtained. Placing

the impulse stop in the middle hole will produce 16° to 26°, and the bottom hole will yield 27° to 36°. The range is increased by moving the stop in the direction of the magneto's rotation.

The lag angle on a flange mounted machine is set by the design of the flange and cannot be varied.

OILING SYSTEM PARTS

After the impulse stop group and all other impulse coupling parts have been removed, the impulse spacer and oiling disc may be removed from the rotor shaft. Then remove the main oil pad, 1379, the oil pad spring plate, X1391. After this the oil scraper unit, X1487, may be removed from the main housing.

When reassembling, first insert the oil scraper unit in the hole provided, making certain that the scraper itself is in the groove and does not get caught and lay over the oil hole, causing the oil circulation to be stopped. The oil pad spring plate should have sufficient tension in the spring to hold the main oil pad securely against the oiling disc. The oil pad should be thoroughly saturated with Wico or SAE 20 oil before installing in the magneto. Next, replace the oiling disc and the impulse spacer. **Caution** On flange mounted models the impulse spacer must be sealed to the drive shaft with white lead.

ROTOR

The ability of magnet steel to retain its magnetism is known as its coercive property. The magneto steel used in the model A rotors has such extremely high coercive value that it is practically impossible for these rotors to lose any appreciable amount of magnetism under any condition.

If, for any reason, it should become necessary to recharge the model A rotor it must be removed and charged out of the housing, using special charging blocks, S4835.

While it is impossible to charge the rotor without removing it from the housing, it is possible to discharge it

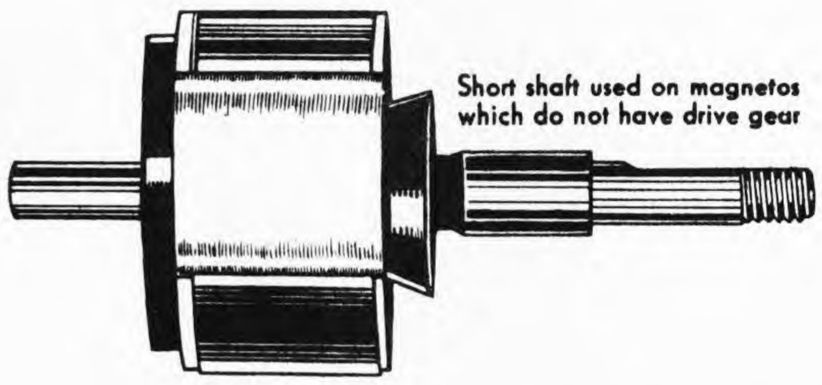

Short shaft used on magnetos which do not have drive gear

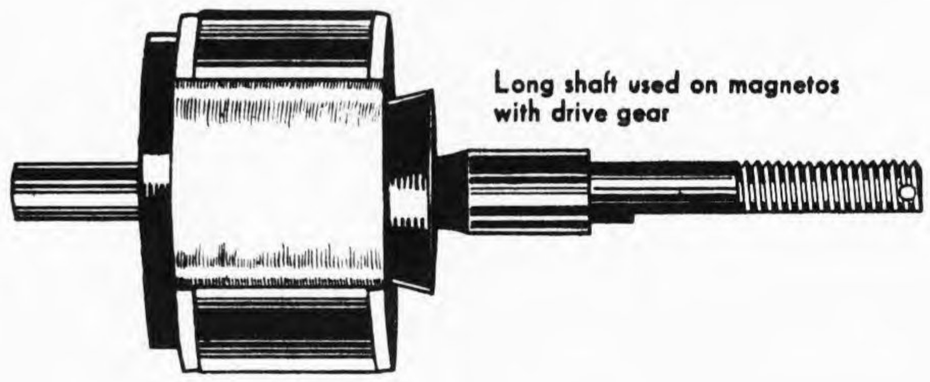

Long shaft used on magnetos with drive gear

by attempting to recharge the magneto without removing the rotor from the housing. In order to remove the rotor from the housing, it is necessary to remove the distributor cap and cover as well as all of the impulse parts and withdraw the rotor from the distributor end of the magneto. Great care should be taken when handling the rotor outside of the magneto to see that metallic chips adhere to it and before re-installing the rotor, it should be thoroughly examined to make certain that it is absolutely clean.

The table of variable parts of the model A parts list in the service parts section of this manual shows the correct rotor for each specification model A magneto. The correct part number of each rotor is also stamped on the rotor at the factory, therefore making identification simple. The accompanying illustrations further clarify the identification of various model A rotors.

MAIN HOUSING

IDENTIFICATION

One and two cylinder main housings may be distinguished from four, G, and R cylinder housings. When viewed from the breaker side of the housing, the right hand core of one and two cylinder housings is shorter than the left hand core. In the case of four, G, and R cylinder housings, both cores are of the same length.

All model A replacement housings are furnished with name plates, oil catcher, oilers, and ground studs on both right and left-hand side, complete with ground stud leadwires. Upon these ground studs may be built the standard stop button or the standard ground connection.

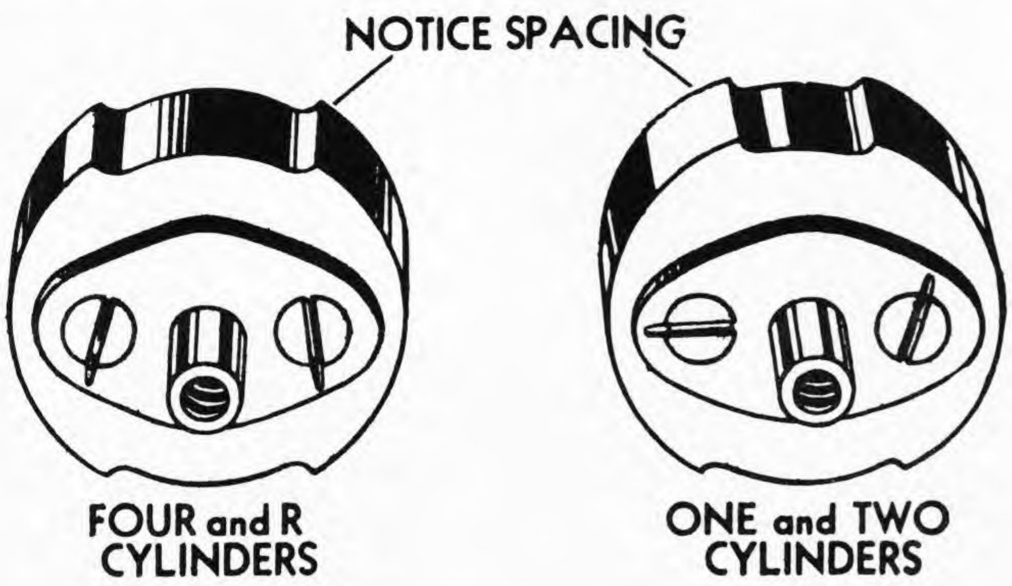

REPLACEMENT OF ROTOR BUSHINGS

See page C 10 of Service Instructions section.