ACE ELECTRIC CO. ▪ P.O. BOX 1328 ▪ 4840 EAST 12th ST ▪ KANSAS CITY, MO. 64127 ▪ (816) 241-8

E-883 VOLTAGE REGULATOR TESTER FOR 12, 24, 30 AND 32 VOLT REGULATORS

OPERATING INSTRUCTIONS

1. PLUG TESTER INTO 110-120 VOLT A.C. OUTLET.

2. WITH THE TESTER TURNED OFF, SWITCH THE "VOLTAGE SELECTOR" KNOB TO THE VOLTAGE RANGE DESIRED, EITHER 12, 24, OR 30-32 VOLTS. THE "VOLTAGE SELECTOR" KNOB SELECTS THE PROPER VOLTMETER SCALE: FOR 12 VOLTS READ THE BOTTOM 12 TO 16 VOLT SCALE, FOR 24 VOLTS READ THE MIDDLE 24 TO 32 VOLT SCALE, FOR 30 & 32 VOLTS READ THE TOP 32 TO 40 VOLT SCALE.
   NOTE: DO NOT SWITCH THE "VOLTAGE SELECTOR" KNOB WHILE HOLDING IN THE "PRESS TO TEST" BUTTON AS DAMAGE TO THE TESTER WILL RESULT.

3. SELECT THE PROPER TEST LEAD FOR THE REGULATOR TO BE TESTED BY CONSULTING THE "TEST LEAD CROSS REFERENCE". IF USING THE NO. 5 UNIVERSAL TEST LEAD, LOCATE THE PROPER HOOK-UP DIAGRAM FOR THE REGULATOR TO BE TESTED. CONNECT THE TEST LEAD TO THE TESTER AND THE REGULATOR TO BE TESTED.

4. TURN TESTER ON. THE ROCKER SWITCH PILOT LIGHT DENOTES THE TESTER IS ON.

5. REGULATOR TEST:

   A. PRESS AND HOLD THE "PRESS TO TEST" BUTTON.

      1. THE LARGE "FIELD LIGHT" SHOULD BE ON. IF NOT THE REGULATOR IS IS OPEN CIRCUITED AND THEREFORE DEFECTIVE. THE "FIELD LIGHT" WILL BE OF NORMAL BRILLIANCE FOR 12 VOLT REGULATORS, DIM FOR 24 VOLT REGULATORS, AND NORMAL BRILLIANCE FOR 30-32 VOLT REGULATORS. THE "FIELD LIGHT" MAY APPEAR TO BLINK WHICH IS NORMAL. THIS IS A FUNCTION OF THE REGULATOR SWITCHING FREQUENCY. DIFFERENT TYPES AND BRANDS OF REGULATORS MAY SWITCH AT DIFFERENT FREQUENCIES.

      2. FIELD LIGHT ON: THE VOLTMETER NEEDLE SHOULD BE IN THE GREEN AREA. IF NOT THE REGULATOR IS DEFECTIVE. ON THOSE REGULATORS THAT ARE ADJUSTABLE, THE REGULATOR MAY POSSIBLY BE ADJUSTED TO OPERATE IN THE GREEN AREA. A GOOD 12 VOLT REGULATOR SHOULD OPERATE AT AROUND 14 VOLTS, 24 VOLT REGULATORS AT AROUND 28 VOLTS, 30 VOLT REGULATORS AT AROUND 35 VOLTS, AND 32 VOLT REGULATORS AT AROUND 37 VOLTS. THE ACTUAL SETTING SHOULD BE DETERMINED FROM THE MANUFACTURERS SPECIFICATIONS.
         NOTE: SOME MOTOROLA REGULATORS FOR ALTERNATORS WITH ISOLATION DIODES AND SOME ELECTRO-MECHANICAL REGULATORS MAY TEST 1 VOLT HIGHER THAN THE ACTUAL OPERATING VOLTAGE.

6. AFTER RELEASING THE "PRESS TO TEST" BUTTON, WAIT APPROXIMATELY 3 SECONDS BEFORE PUSHING IT AGAIN.

CONTINUED ON NEXT PAGE

REPLACE WITH ACE

Alternators ▪ Starters ▪ Generators ▪ Voltage Regulators ▪ Parts ▪ Field Coil

OPERATING INSTRUCTIONS

CONTINUED

7. A.C. TEST LEAD USE: THIS TESTER HAS THE CAPABILITY OF TESTING THOSE REGULATORS WHICH USE A.C. FIELD CURRENT DIRECTLY FROM THE STATOR WITHOUT A DIODE TRIO AND A SCR RATHER THAN A POWER TRANSISTOR IN THE REGULATOR. CONSULT THE MOTOROLA SECTION FOR PROPER TEST LEAD HOOK-UP. THE A.C. TEST LEAD IS USED WITH THE NO. 5 UNIVERSAL TEST LEAD.

8. THE TESTER SOLID STATE COMPONENTS AND INTERGRATED CIRCUIT DEVICES ARE PROTECTED BY AN "ELECTRONIC SHORT CIRCUIT SHUT-DOWN" IF THE TEST LEAD OR REGULATOR TO BE TESTED IS SHORTED THE TESTER WILL SHUT DOWN. WAIT APPROXIMATELY 3 SECONDS BEFORE PUSHING THE "PRESS TO TEST" BUTTON AGAIN TO ALLOW THE TESTER CIRCUIT TO RESET ITSELF.

9. SERVICE: NO MAINTENANCE IS NEEDED BEYOND NORMAL TEST EQUIPMENT CARE. IF THE TESTER IS SUSPECTED OF OPERATING INCORRECTLY THE PROBLEM MAY BE IN THE TESTER OR THE TEST LEAD. TO VERIFY, SIMPLY TRY THE TESTER ON A REGULATOR WHICH IS KNOWN TO BE GOOD. IF THE TESTER OPERATES CORRECTLY THE PROBLEM IS EXTERNAL TO THE TESTER.
THE TESTER HAS A MECHANICAL CIRCUIT BREAKER IN THE 110 VOLT PRIMARY CIRCUIT. IF A OVERLOAD TRIPS THE CIRCUIT BREAKER, SIMPLY TURN OFF THE TESTER AND PUSH THE RESET BUTTON ON THE REAR OF THE TESTER.

VOLTAGE REGULATOR TESTER

TEST LEAD CROSS REFERENCE

TEST LEAD PART NO.	COLOR CODE	REGULATOR TERMINAL ARRANGEMENT	APPLICATION
1	RED		DELCO REMY 9000590, 9000591*, 9000592*, 9000593*
2	RED	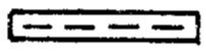	DELCO REMY ELECTRO-MECHANICAL SUCH AS- 1119506, 1119515, 1119519, 1116374, 1116378
3	WHITE		FORD SOLID STATE SUCH AS- C6AZ-10316-A, GR-374
5	BLUE		UNIVERSAL: SEE HOOK-UP INSTRUCTIONS FOR REGULATOR TO BE TESTED
10	BLACK/YELLOW		CHRYSLER SOLID STATE SUCH AS- CH-537, 348150
11	WHITE	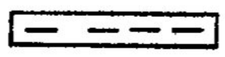	FORD ELECTRO-MECHANICAL SUCH AS- C3SZ-10316-B
13	YELLOW		MOTOROLA 3-LEAD COMBINATION SUCH AS- TVR-12CC1, R2AM1, TVR-12W14, TVR-12-11, TVR-24-29*
14	WHITE	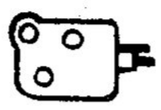	FORD INTEGRAL REGULATOR SUCH AS- C8Z-10316-A
15	YELLOW	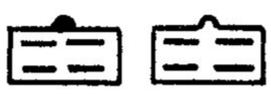	MOTOROLA 2-LEAD COMBINATION SUCH AS- R2AM4, VSH-6201F, 3195001, 8RB2005, 8RH-2001 (VOLKSWAGEN)
16A	RED		DELCO REMY INTERNAL REGULATORS FOR 10SI, 27SI, 30SI, 40SI ALTERNATORS SUCH AS- 1116387, 1116383, 1116389, 1116388* PLACE REGULATOR ON 3 THREADED STUDS WITH PLASTIC CONNECTOR TO THE 2 MALE SPADE TERMINALS (EITHER WAY), ON REGULATORS WITH THREADED STUD CONNECT THE MOLDED RUBBER CONNECTOR TO IT.
AC	YELLOW		AUXILIARY TEST LEAD FOR USE WITH A.C. FIELD REGULATORS

* PERTAINS TO 12, 24, 30-32 VOLT TESTER ONLY

CONTINUED ON NEXT PAGE

VOLTAGE REGULATOR TESTER

TEST LEAD CROSS REFERENCE

TEST LEAD PART NO.	COLOR CODE	REGULATOR TERMINAL ARRANGEMENT	APPLICATION
NOTE: THE TEST LEADS ON THIS PAGE ARE OPTIONAL AND ARE NOT INCLUDED IN THE 10 TEST LEAD PACKAGE.			
17	GREEN		NIEHOFF DESIGN SOLID STATE REGULATORS SUCH AS- A150, A157, A158, A172, A171, A173
18	BLUE/BLACK	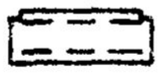	TOYOTA SUCH AS- 27700-22010, 27700-31010, 27700-31011, 27700-33010
19	BLUE/YELLOW	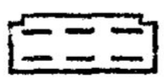	DATSUN, CHEVROLET LUV SUCH AS- 23500-14802, 23500-14814, 23500-16516, 23500-29901, 23500-29902, 23500-29911
20	BLUE/RED	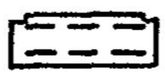	DODGE COLT, FORD COURIER, MAZDA SUCH AS- MD-001810, MD001811
EXT.	BLACK		6 FOOT TEST LEAD EXTENXION, FOR EASIER ON-VEHICLE TESTING OF REGULATORS.
22	BLACK		CATERPILLAR 4N5110 NIIPPONDENSO 026000-2380
23	BLUE/YELLOW		DATSUN, 3 LEAD COMBINATION LATE MODELS
24			PRODUCTION TEST LEAD WITH TOGGLE CLAMP FOR DELCO REMY INTERNAL REGULATORS.

JIMCO SERVICE BULLETIN

SUBJECT:
Common complaints when testing the Delco Remy passenger car internal voltage regulator (10SI and 27SI alternators).

PROBLEM:
The alternator has output and the regulator tests OK on the regulator tester but the indicator light in the vehicle fails to go out.

OPERATION:
Refer to the figure on back. The regulator is not supposed to turn off the indicator light. Its only purpose is to control alternator output voltage. The indicator light is turned off when the diode trio feeds current to the rotor after initial excitation of the alternator. When the diode trio starts supplying field current, voltage is on both sides of the indicator light, no current can flow through the indicator light, therefore turning it off.

POSSIBLE CAUSES OF THE PROBLEM:
#1- One or more diodes of the diode trio are open. The alternator will produce 50% to 75% current output with only two diodes in the trio. However, output voltage will be low and the indicator light will glow as the indicator light and excitation resistor are still supplying a portion of the field current.

#2- The indicator light circuit is grounded at some point in the wiring harness allowing the indicator light current to flow to ground.

#3- The regulator connector plug or the terminals in the connector plug to the regulator terminals no. 1 and no. 2 are reversed. This will cause wild alternator output voltage.

#4- The regulator ground circuit is not complete, possibly caused by failure to install the two insulated regulator mounting screws and the one non-insulated mounting screw in their proper places. Also one or both brushes may be hung up in their holders.

SOLUTIONS:
Problem #1- Always check the alternator on a test bench with a indicator light and excitation resistor connected to their proper terminals. Check the diode trio and replace if defective.

Problem #2- Disconnect the alternator plug. With the ignition keyy in "off" position, there should be battery voltage at the wire to terminal no. 2 and no voltage at the wire to terminal no. 1. With the ignition switch "on" there should be battery voltage at both terminals. A blown fuse may cause feedback through the indicator light circuit. With the connector plug removed from the alternator and the ignition key "on", the light should be off. Check fuse block and replace any blown fuses (usually dash lights).

Problem #3- Check connector plug as explained in step no. 2

Problem #4- Disassemble alternator and check all components.

1-20-78

DELCO REMY 10SI PASSENGER CAR CHARGING SYSTEM

REGULATOR OPERATION

THE POWER TRANSISTOR ACTS AS A SIMPLE SWITCH TO COMPLETE THE FIELD CIRCUIT TO GROUND FOR ALTERNATOR OUTPUT. THE POWER TRANSISTOR IS CONTROLLED BY THE SWITCHING CIRCUIT WHICH IN TURN IS FED BY THE VOLTAGE DIVIDER CIRCUIT WHICH MEASURES BATTERY VOLTAGE CONNECTED TO REGULATOR TERMINAL NO. 2. THE POWER TRANSISTOR IS THEN RAPIDLY SWITCHED ON AND OFF TO ALLOW THE ALTERNATOR TO PRODUCE OUTPUT CURRENT DEPENDENT UPON LOAD AT A CONTROLLED VOLTAGE LEVEL.

TERMINAL NO. 1 IS DIRECTLY CONNECTED TO THE POSITIVE BRUSH LEAD. THE INDICATOR LIGHT AND EXCITATION RESISTOR PROVIDE AN INITIAL SMALL AMOUNT OF FIELD CURRENT WHEN THE ALTERNATOR IS FIRST SPUN. WHEN THE ALTERNATOR BEGINS TO PRODUCE OUTPUT CURRENT THE DIODE TRIO THEN PROVIDES THE FIELD CURRENT. THIS NOW PLACES NEARLY EQUAL VOLTAGES ON BOTH SIDES OF THE INDICATOR LIGHT WHICH PREVENTS INDICATOR LIGHT CURRENT FLOW, TURNING IT "OUT".

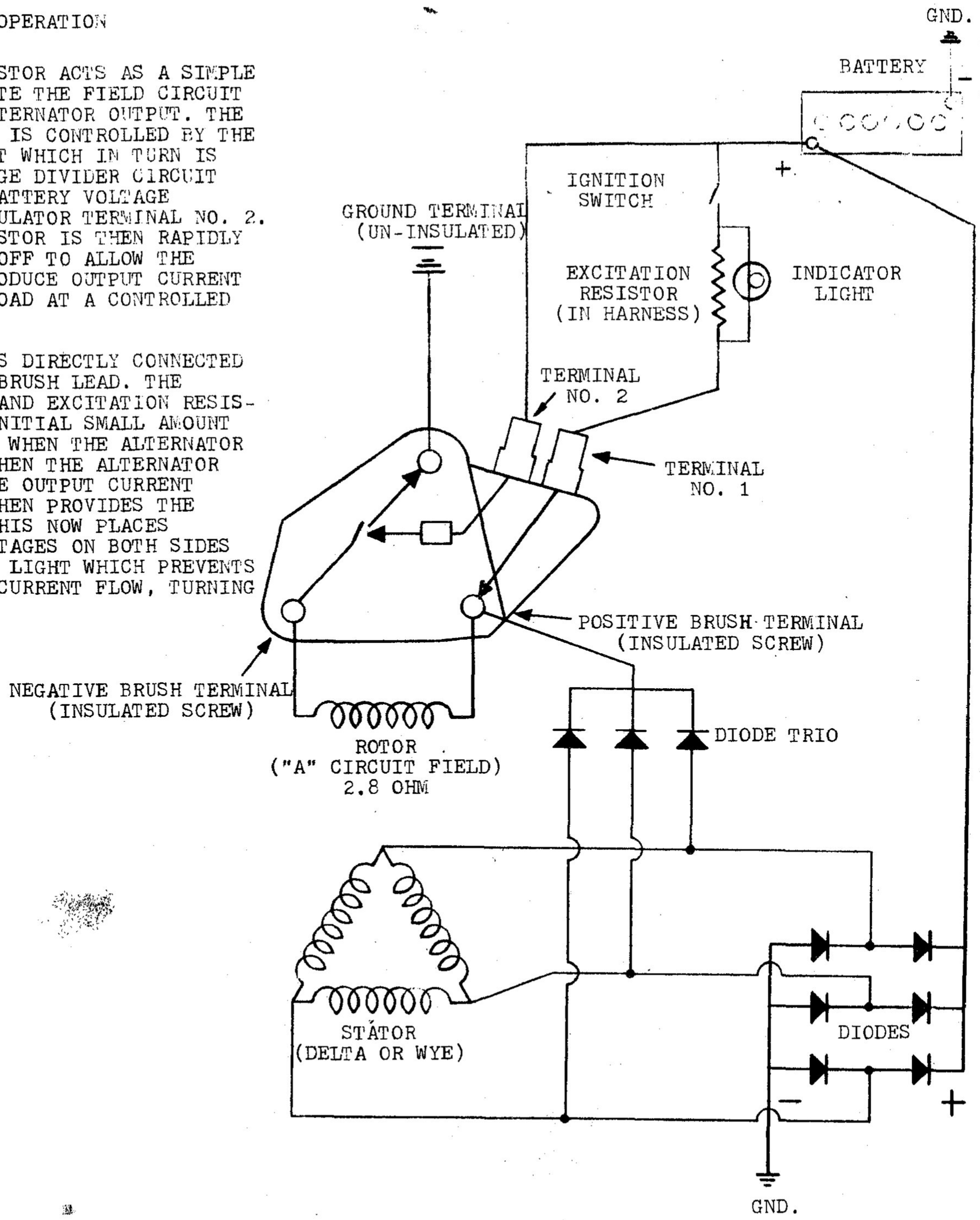

FORD

VOLTAGE REGULATOR TESTER

ETL-881-5 UNIVERSAL TEST LEAD HOOK-UP

FORD INTEGRAL REGULATOR C8Z-10316-A, GR-383

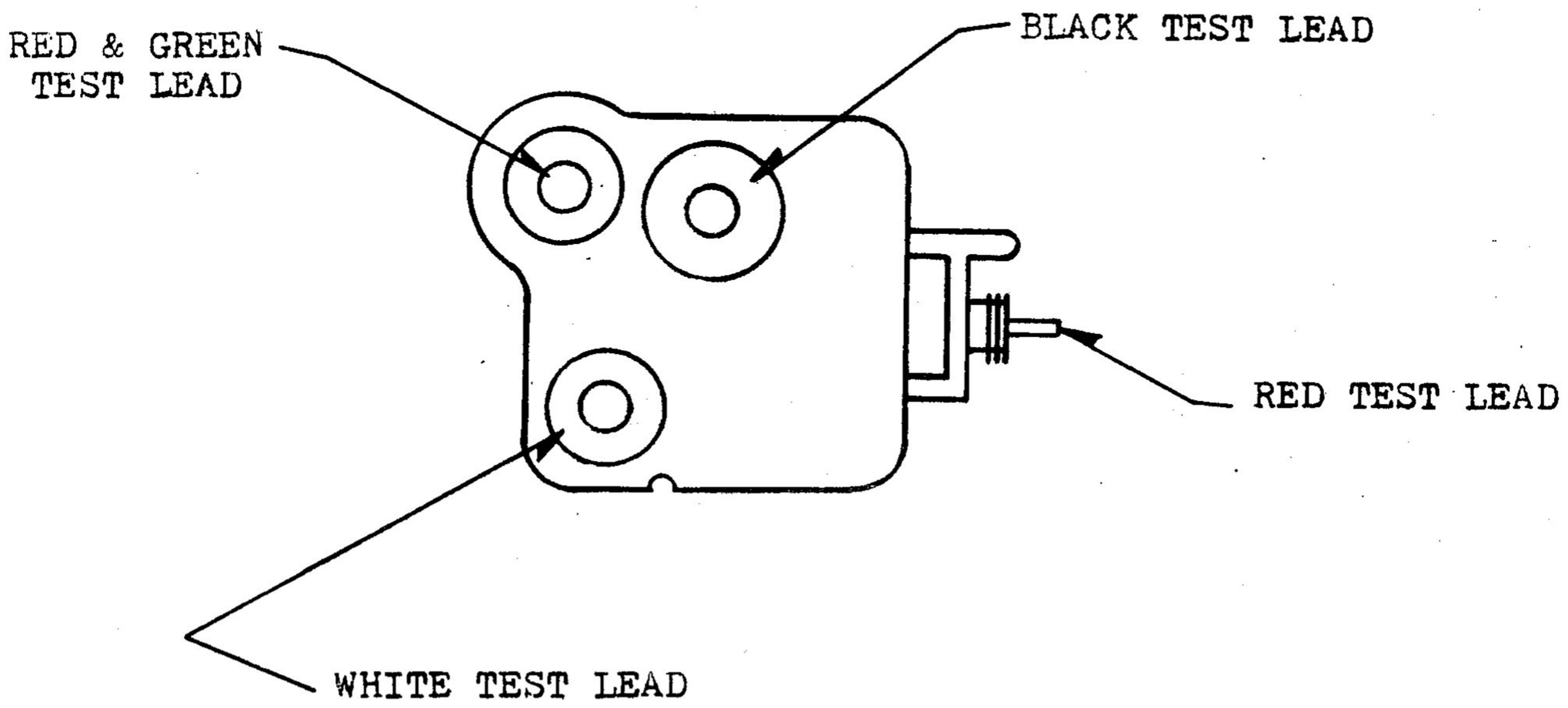

NOTE: IT IS SUGGESTED THAT NO. 8 MACHINE SCREWS AND NUTS BE USED TO CONNECT THE TEST LEAD TO THE REGULATOR

FORD

VOLTAGE REGULATOR TESTER

ETL-881-5 UNIVERSAL TEST LEAD HOOK-UP

FORD ELECTRO-MECHANICAL SERIES ALTERNATOR REGULATORS WITH 4 TERMINALS
SUCH AS- GR-341
C3SZ-10316-B
C4TF-10316-D

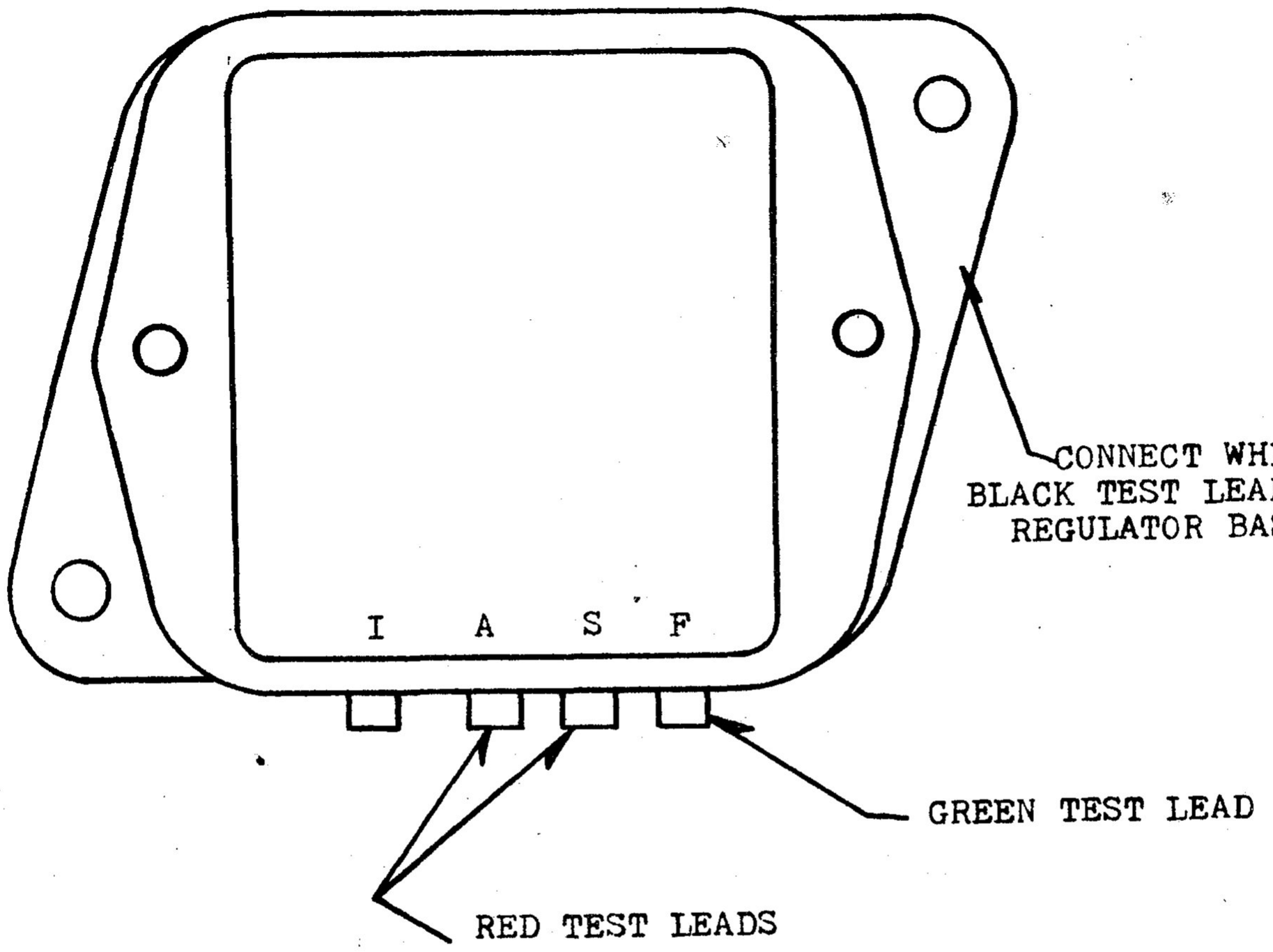

CHRYSLER

VOLTAGE REGULATOR TESTER

ETL-881-5 UNIVERSAL TEST LEAD HOOK-UP

CHRYSLER ELECTRO-MECHANICAL ALTERNATOR VOLTAGE REGULATOR
SUCH AS- 1889960
2095700
2098300
VBT-6201C,D
P8-105
P8-724
CH-524

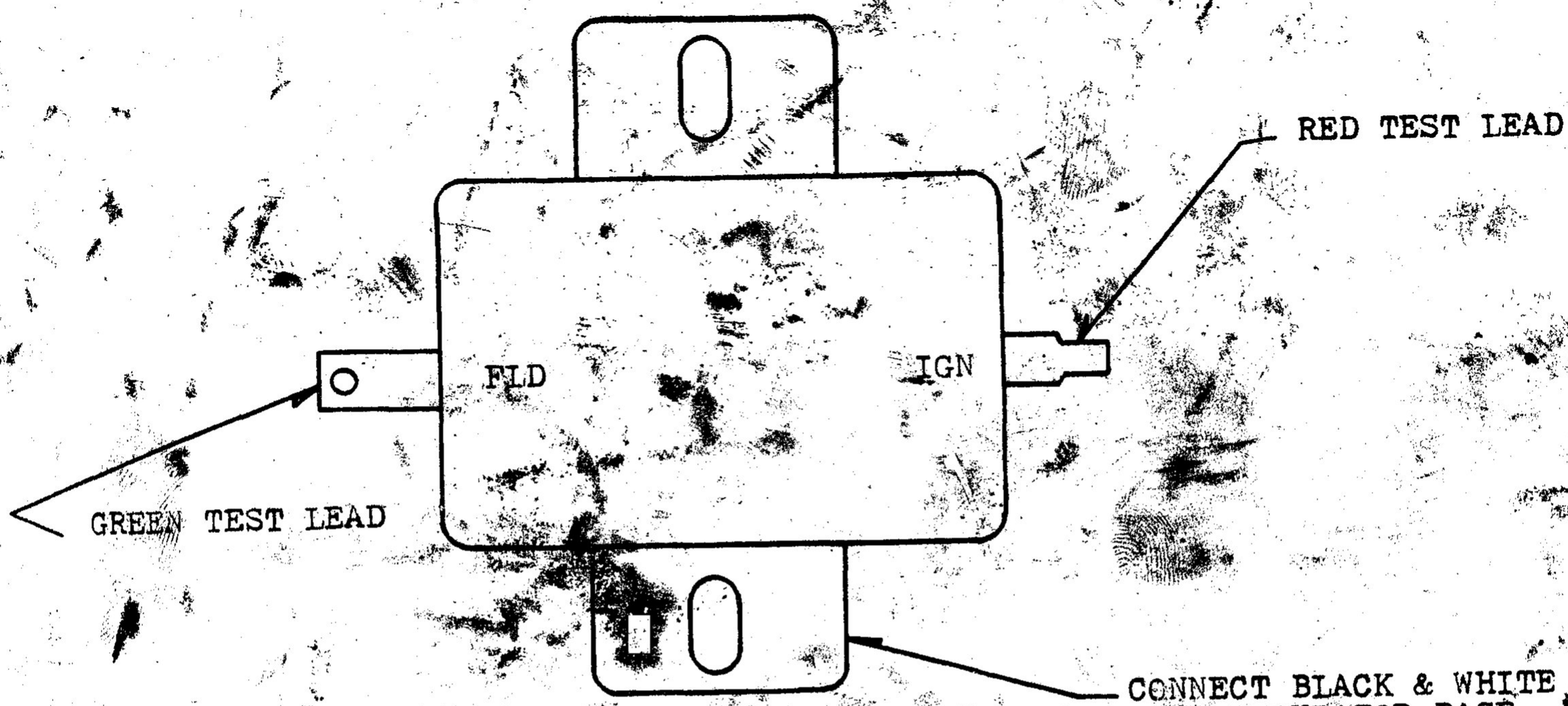

CHRYSLER

VOLTAGE REGULATOR TESTER

ETL-881-5 UNIVERSAL TEST LEAD HOOK-UP

CHRYSLER SOLID STATE WITH 2 TERMINAL PINS, 1970 AND UP
SUCH AS- CH-537
3438150

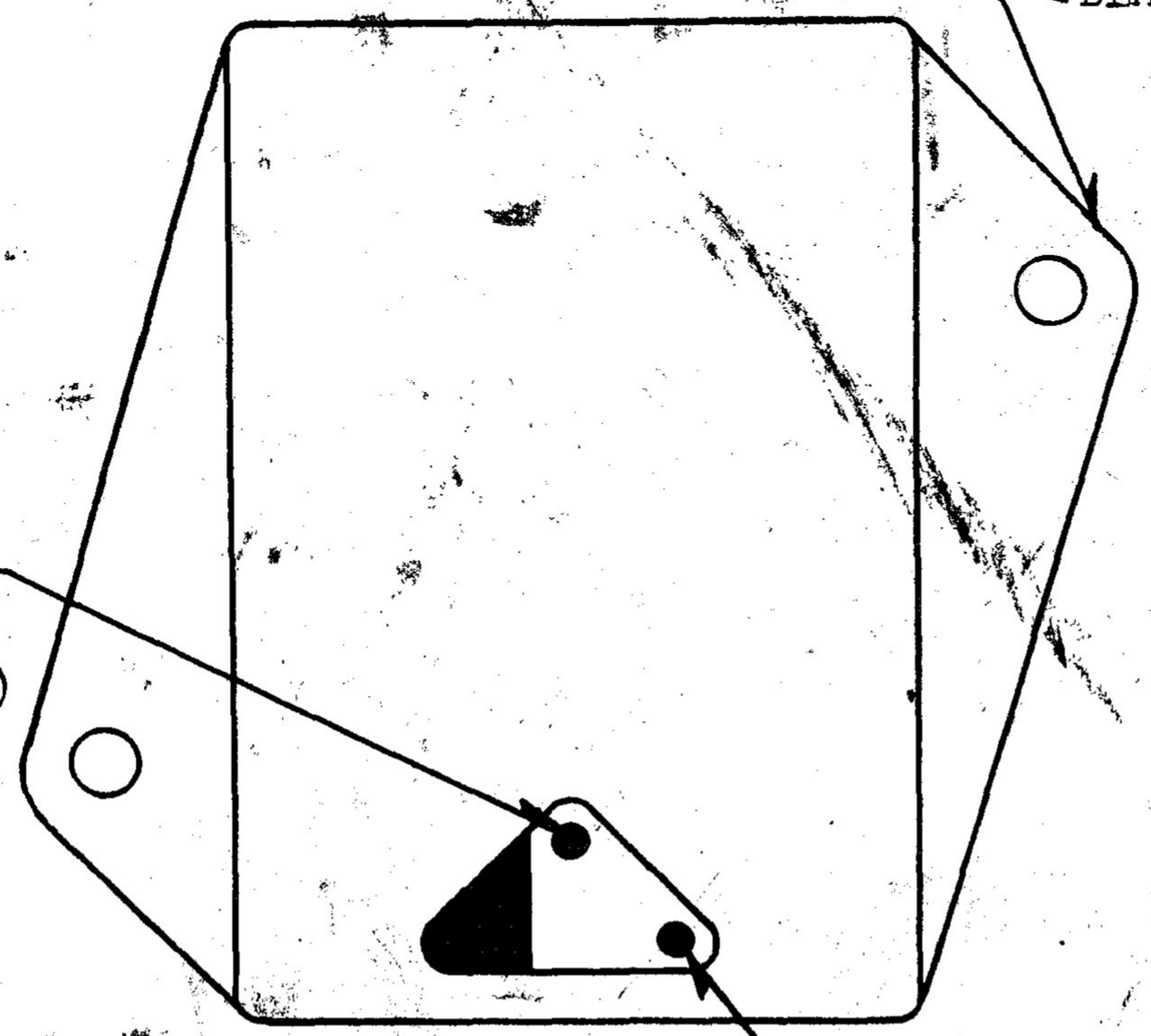

DELCO

VOLTAGE REGULATOR TESTER

ETL-881-5 UNIVERSAL TEST LEAD HOOK-UP

DELCO ELECTRO-MECHANICAL AND SOLID STATE REGULATORS WITH THIS TYPE TERMINAL ARRANGEMENT

SUCH AS- 1119515
1119507
1119519
1116368 solid state
1116378 solid state

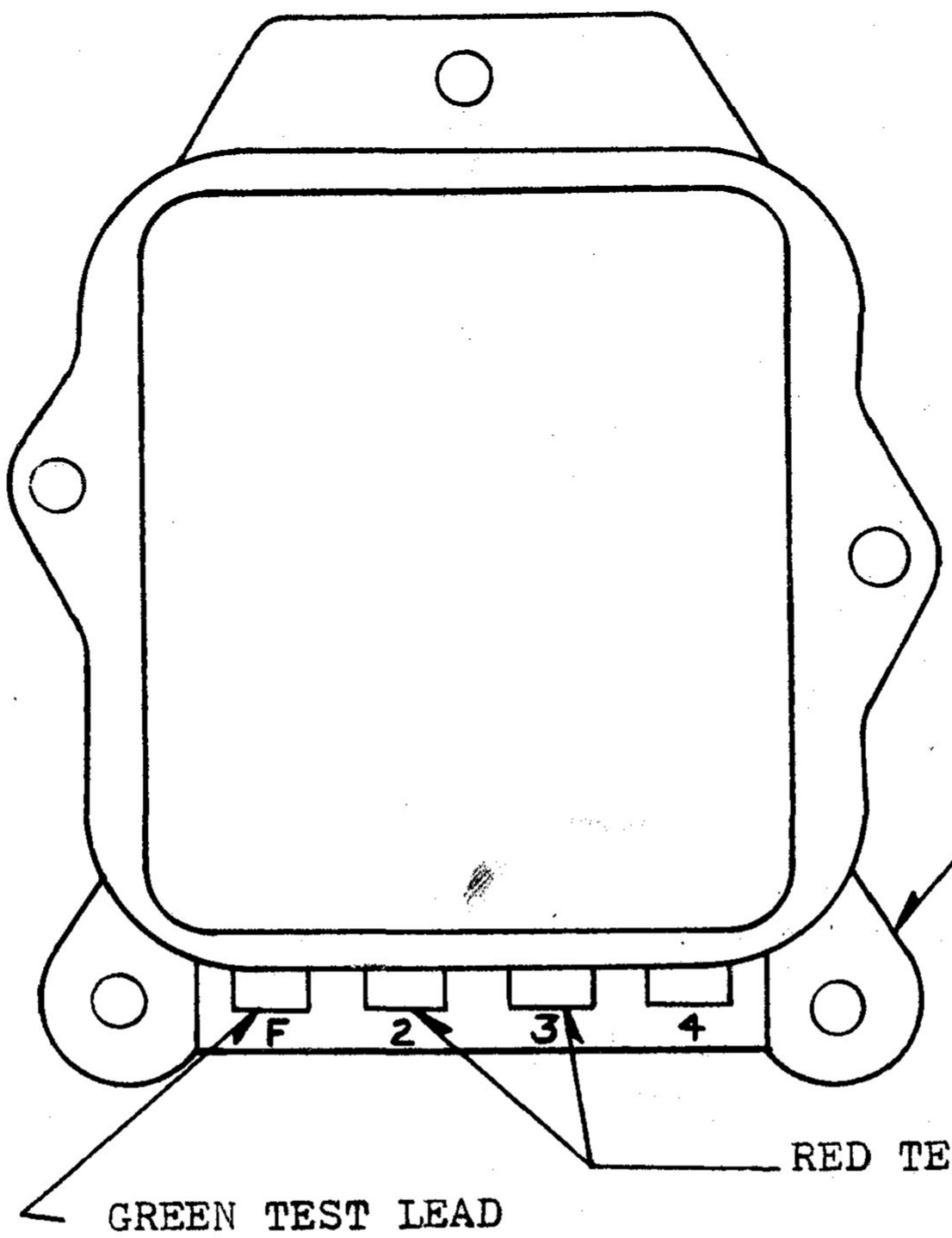

NOTE: SOME REGULATORS DO NOT USE THE NO. 2 TERMINAL

CONNECT RED TEST LEAD [illegible]
STATOR TERMINALS, PERFORM [illegible]
TIMES, ONCE EACH OF THE THREE STA
TERMINALS, THIS WILL VERIFY STATOR
DIODES.

[illegible] TEST LEAD TO
[illegible]LD TERMINAL

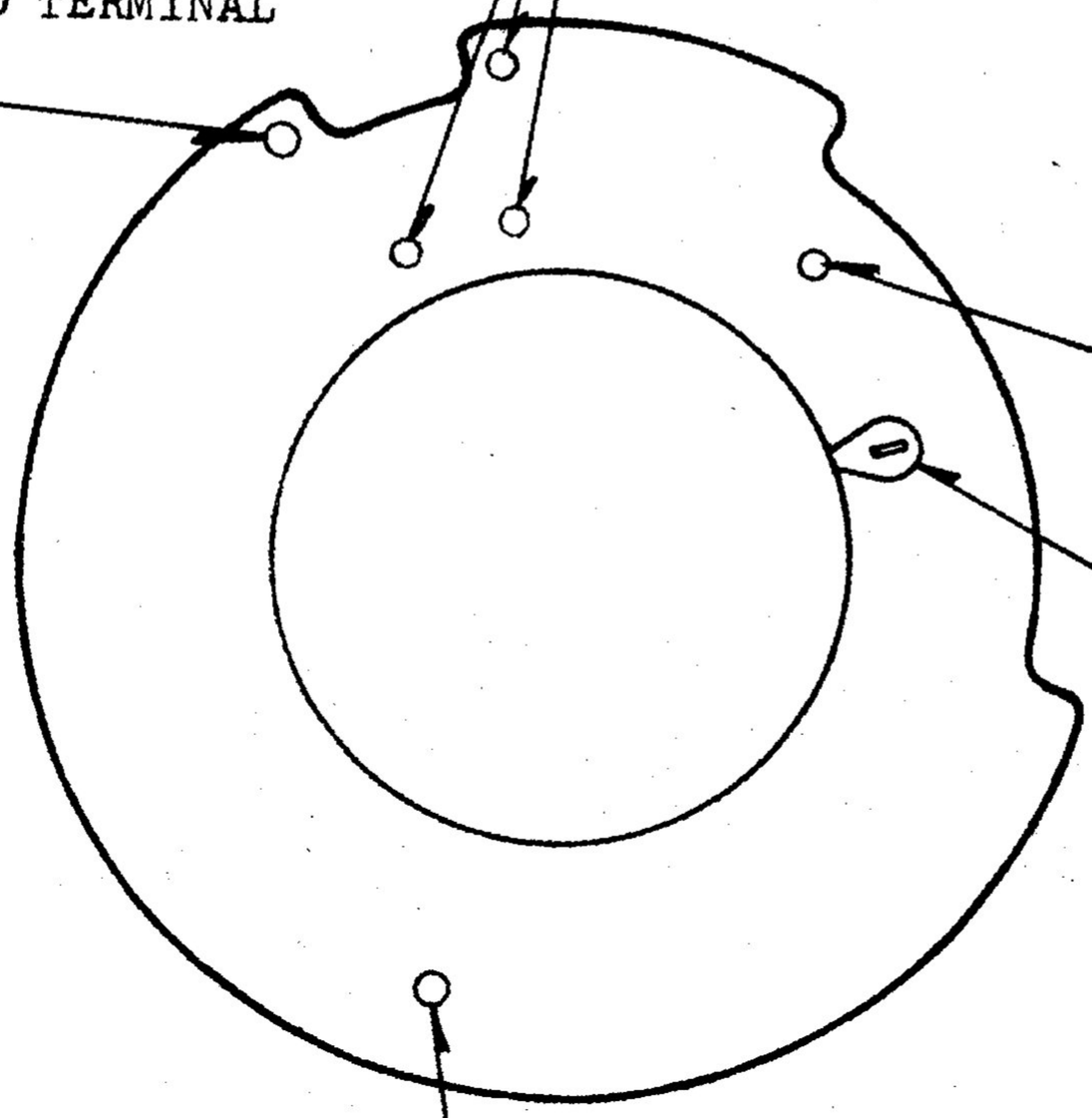

BLACK AND WHITE TEST LEAD
TO REGULATOR GROUND

PLASTIC VOLTAGE ADJUSTMENT
LEVER (FOR REFERENCE)

CONNECT THIS REGULATOR GROUND TO THE BLACK TEST LEAD WITH A JUMPER WIRE (PRESENT TEST LEADS HAVE A EXTRA BLACK WIRE FOR THIS CONNECTION) BOTH POINTS OF REGULATOR MUST BE GROUNDED FOR REGULATOR TO WORK.

DELCO

VOLTAGE REGULATOR TESTER

ETL-881-5 UNIVERSAL TEST LEAD HOOK-UP

DELCO REMY 25SI SERIES ALTERNATORS WITH SOLID STATE REGULATOR NO. 800784, 12 VOLT POSITIVE GROUND

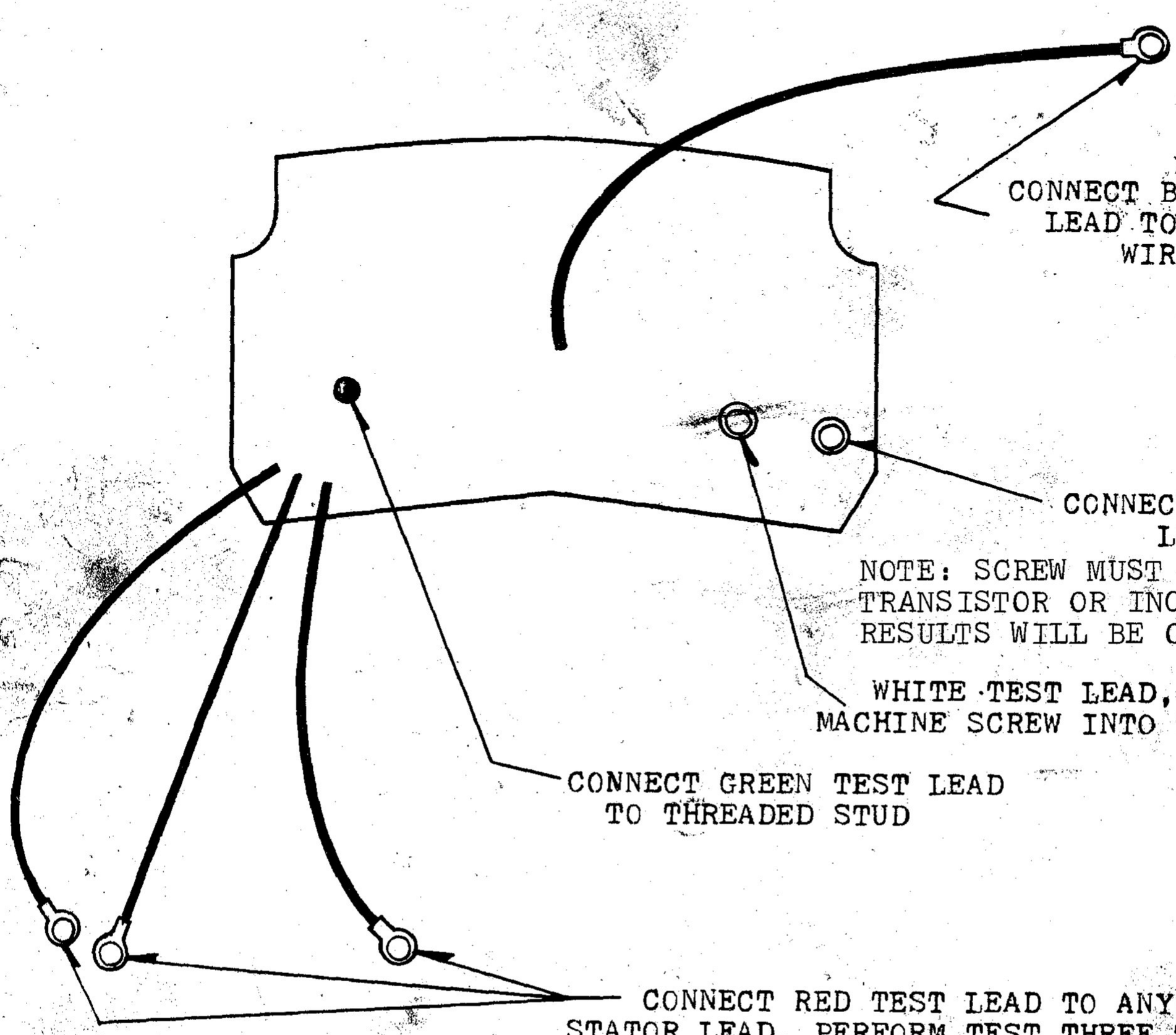

DELCO

VOLTAGE REGULATOR TESTER

ETL-881-5 UNIVERSAL TEST LEAD HOOK-UP

DELCO REMY 25SI SERIES ALTERNATORS WITH SOLID STATE REGULATOR NO. 1968949, 12 VOLT NEGATIVE GROUND

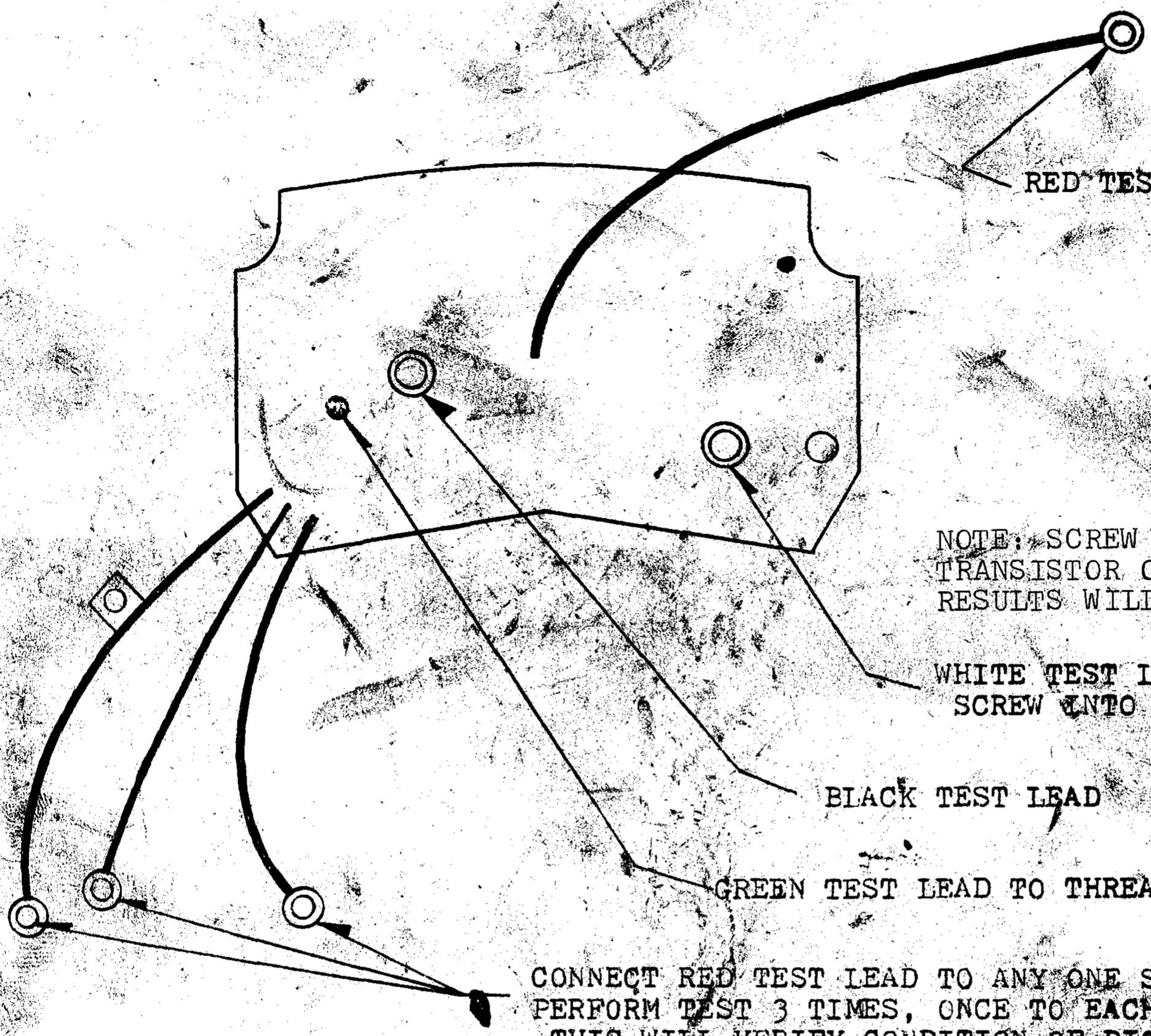

CONNECT RED TEST LEAD TO ANY ONE STATOR WIRE, PERFORM TEST 3 TIMES, ONCE TO EACH STATOR WIRE THIS WILL VERIFY CONDITION OF DIODES

L-N

VOLTAGE REGULATOR TESTER

NO. 5 UNIVERSAL TEST LEAD HOOK-UP

LEECE-NEVILLE: 77973
97300
78855 (24 VOLT TESTER ONLY)

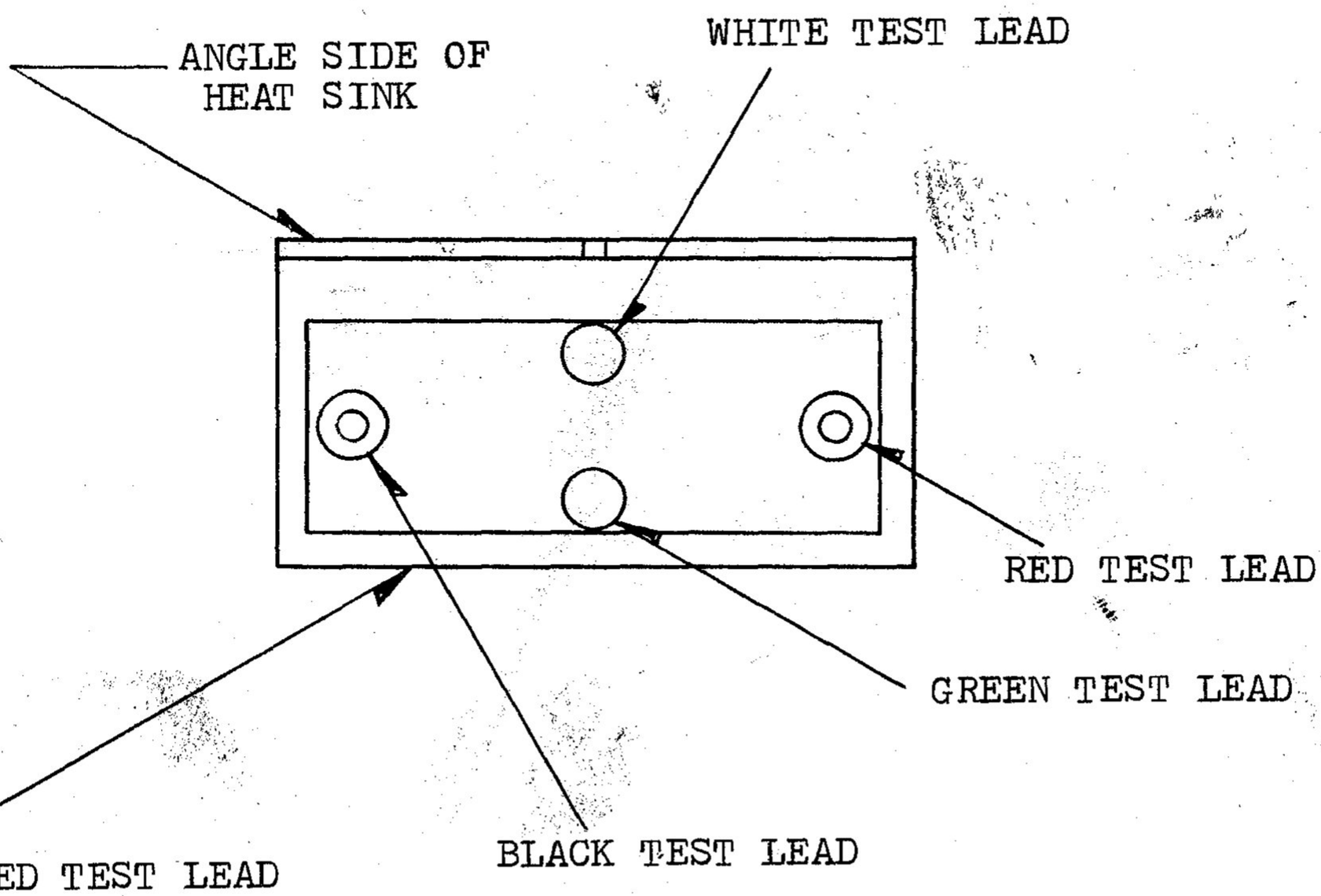

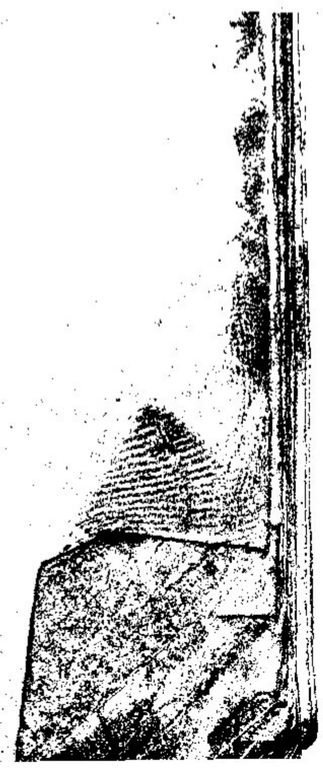

L-N

VOLTAGE REGULATOR TESTER

ETL-881-5 UNIVERSAL TEST LEAD HOOK-UP

LEECE-NEVILLE NO. R0015022RB POSITIVE OR NEGATIVE GROUND

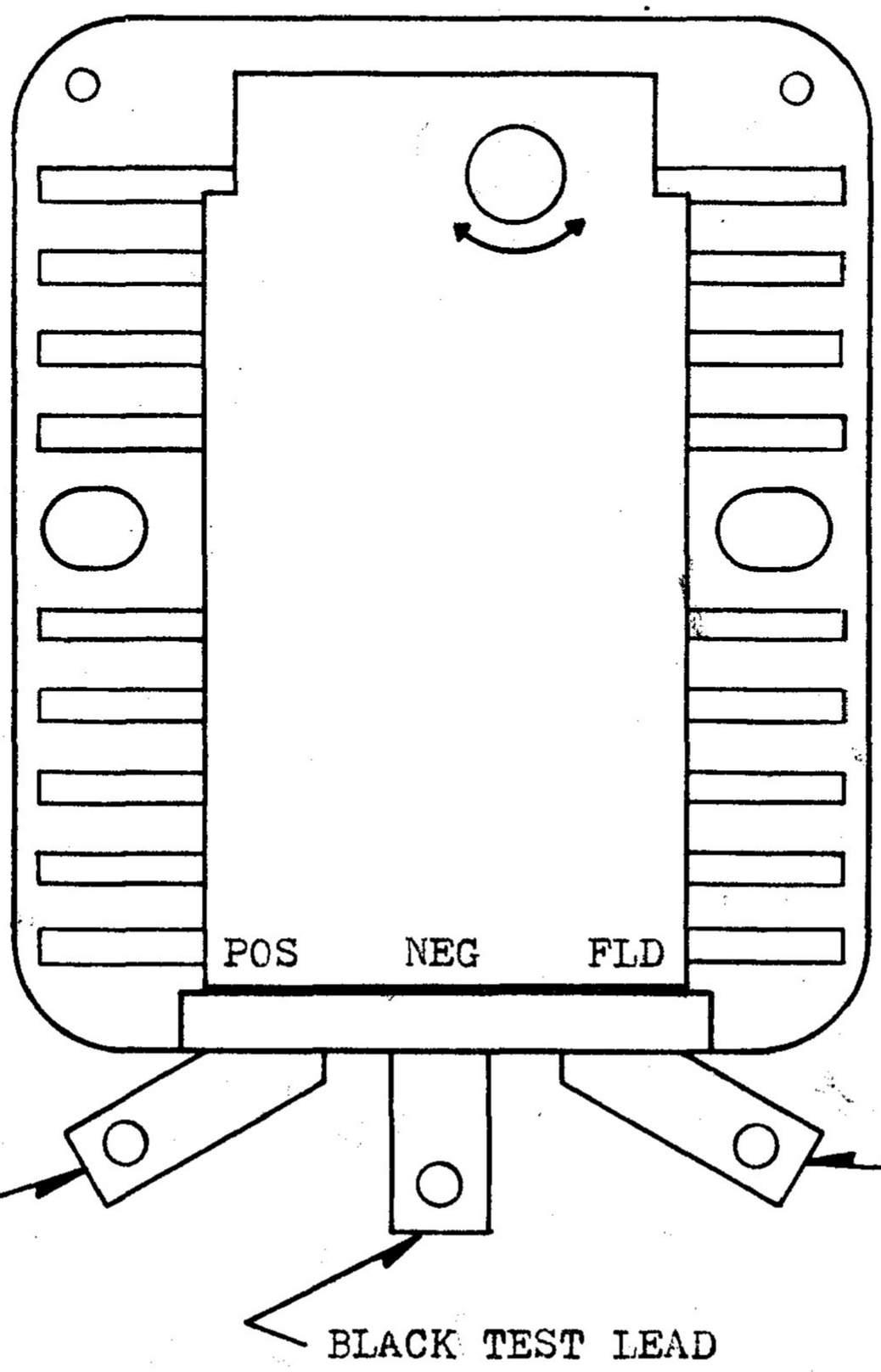

L-N

VOLTAGE REGULATOR TESTER

ETL-881-5 UNIVERSAL TEST LEAD HOOK-UP

LEECE-NEVILLE NO. R00150016RC POSITIVE OR NEGATIVE GROUND

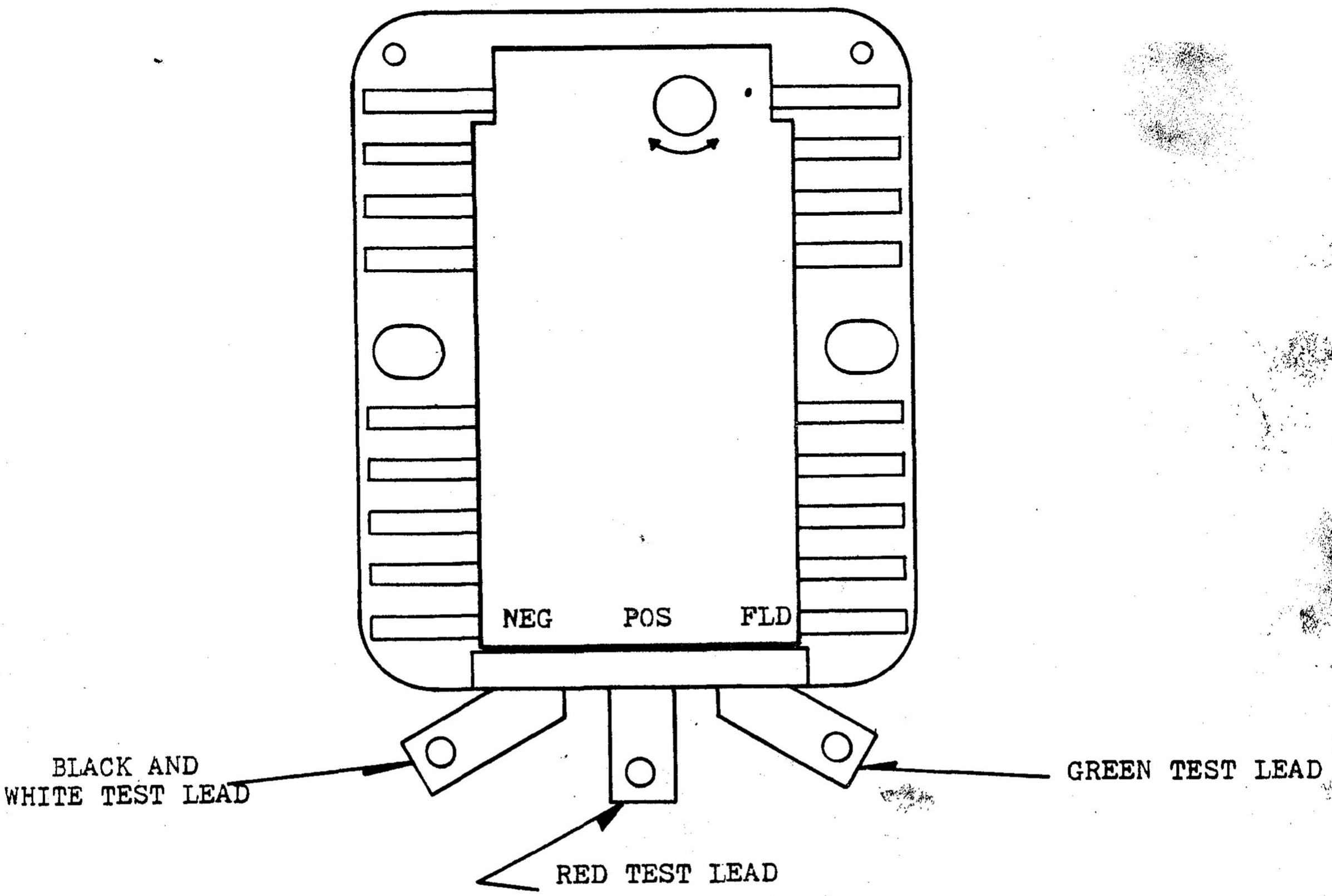

VOLTAGE REGULATOR TESTER

NO.5 UNIVERSAL TEST LEAD HOOK-UP

LEECE-NEVILLE: R0013544RA <u>POSITIVE GROUND</u>
OTHER REGULATORS OF THIS TYPE

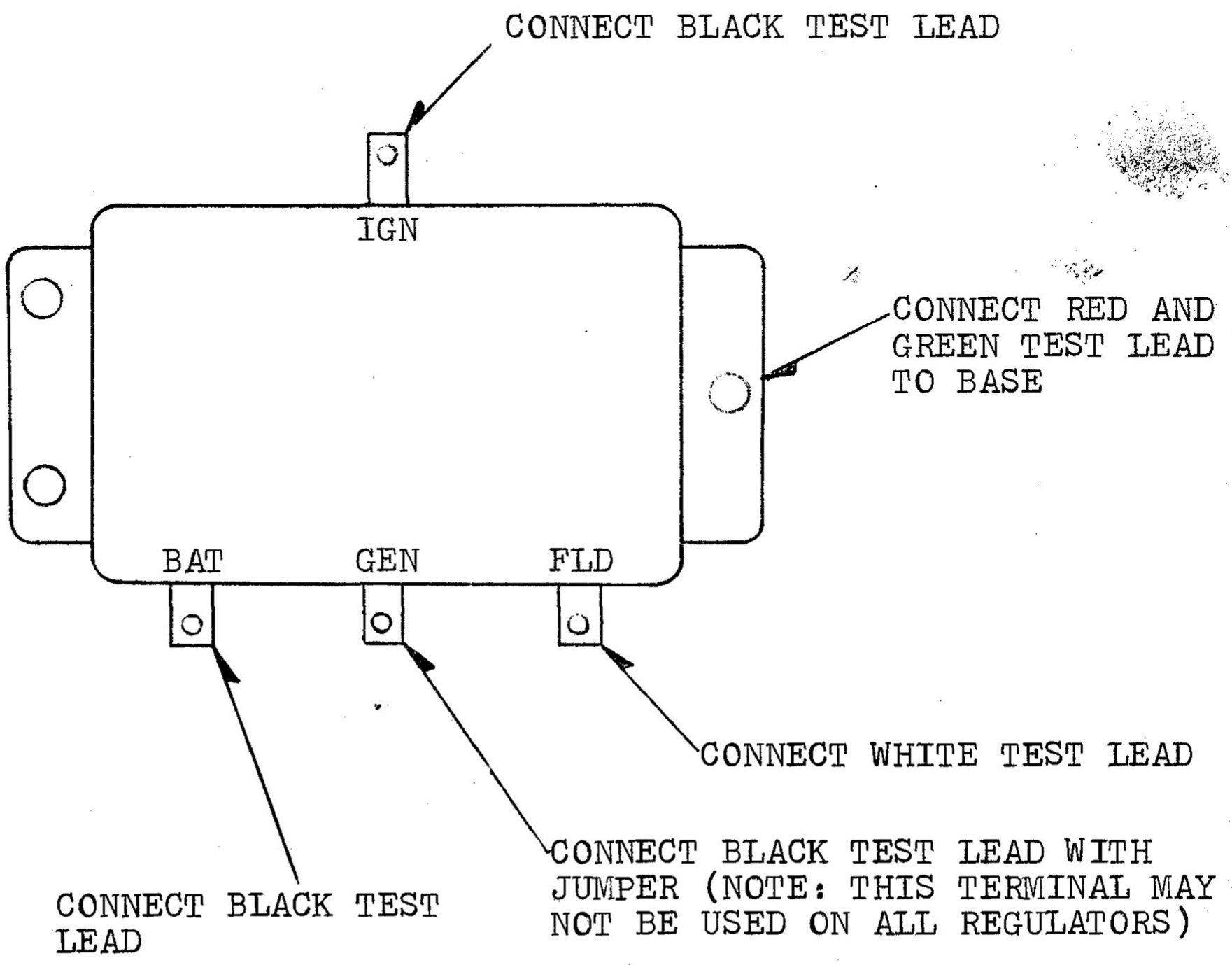

VOLTAGE REGULATOR TESTER

NO. 5 UNIVERSAL TEST LEAD HOOK-UP

LEECE-NEVILLE: NEGATIVE GROUND REGULATORS OF THIS TYPE

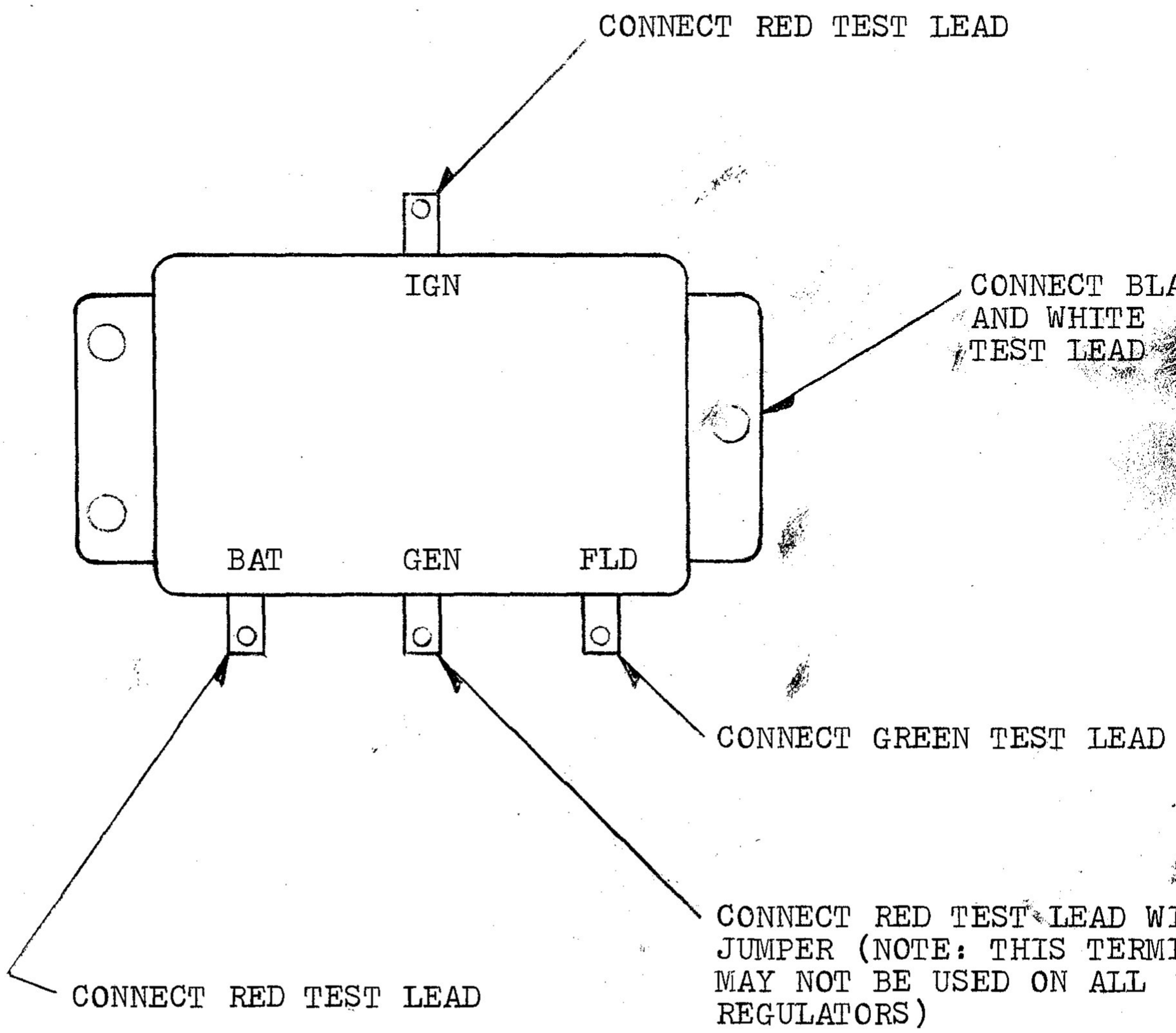

MOTOROLA

VOLTAGE REGULATOR TESTER

ETL-881-5 UNIVERSAL TEST LEAD HOOK-UP

MOTOROLA R7-2 AND R7-3

MOTOROLA

VOLTAGE REGULATOR TESTER

NO.5 UNIVERSAL TEST LEAD HOOK-UP

MOTOROLA: R7-1
8RG20001
(JD AT29926)

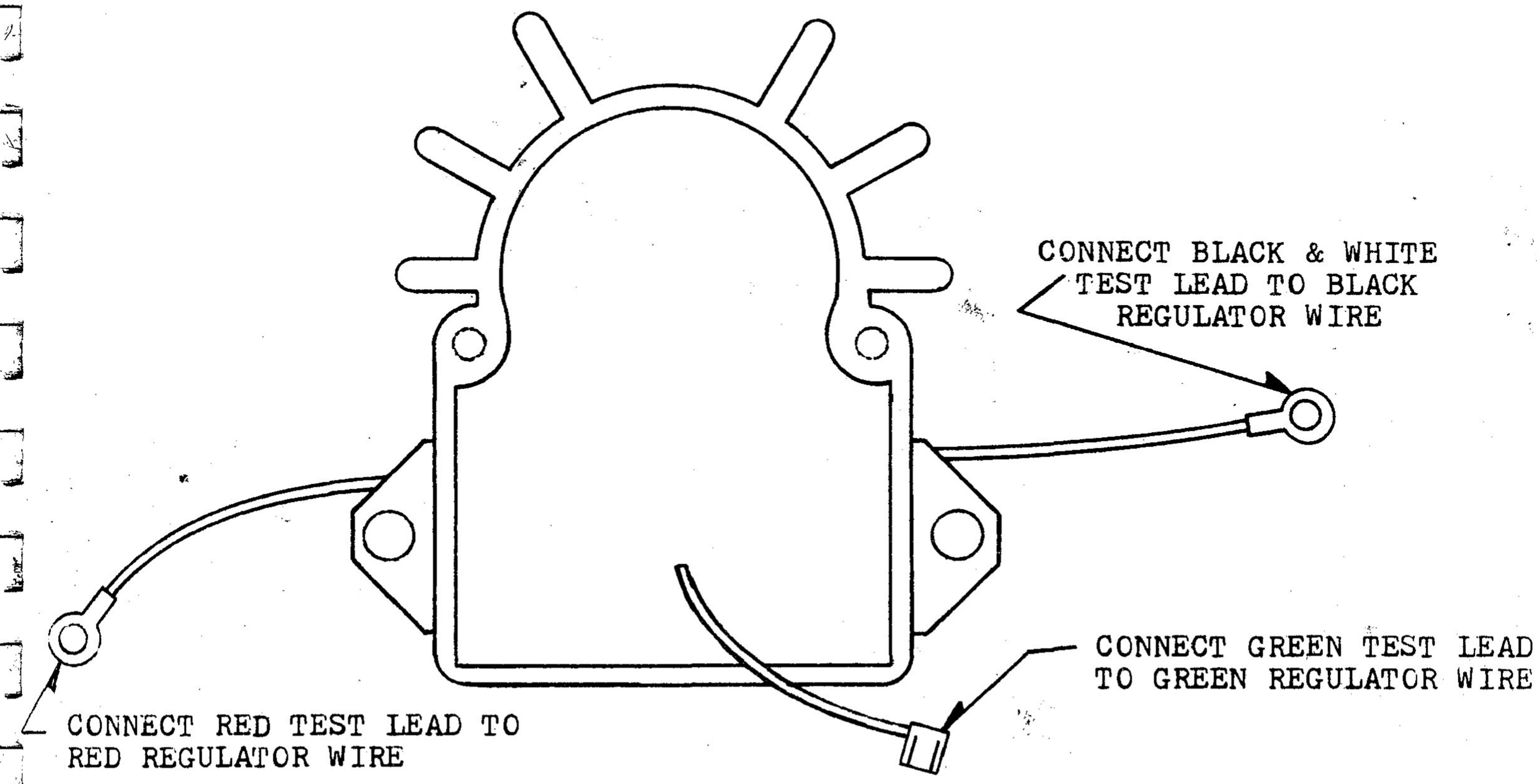

NOTE: REGULATORS FOR ALTERNATORS WITH ISOLATION DIODES THE VOLTAGE SHOULD READ APPROX. 15 VOLTS.

REGULATORS FOR ALTERNATORS WITHOUT ISOLATION DIODES THE VOLTAGE SHOULD READ APPROX. 14 VOLTS.

MOTOROLA

VOLTAGE REGULATOR TESTER

NO.5 UNIVERSAL TEST LEAD HOOK-UP

MOTOROLA: R3-1
R3-2 (12, 24, 30-32 VOLT TESTER ONLY)
R3-3
R3JD1, A, B
R3JD2, A, B (12, 24, 30-32 VOLT TESTER ONLY)
R3ON1
R3WC1
R3WE1

NOTE: THIS HOOK-UP IS ONLY FOR REGULATORS WITH ONE FIELD WIRE AND ONE FIELD BRUSH GROUNDED.

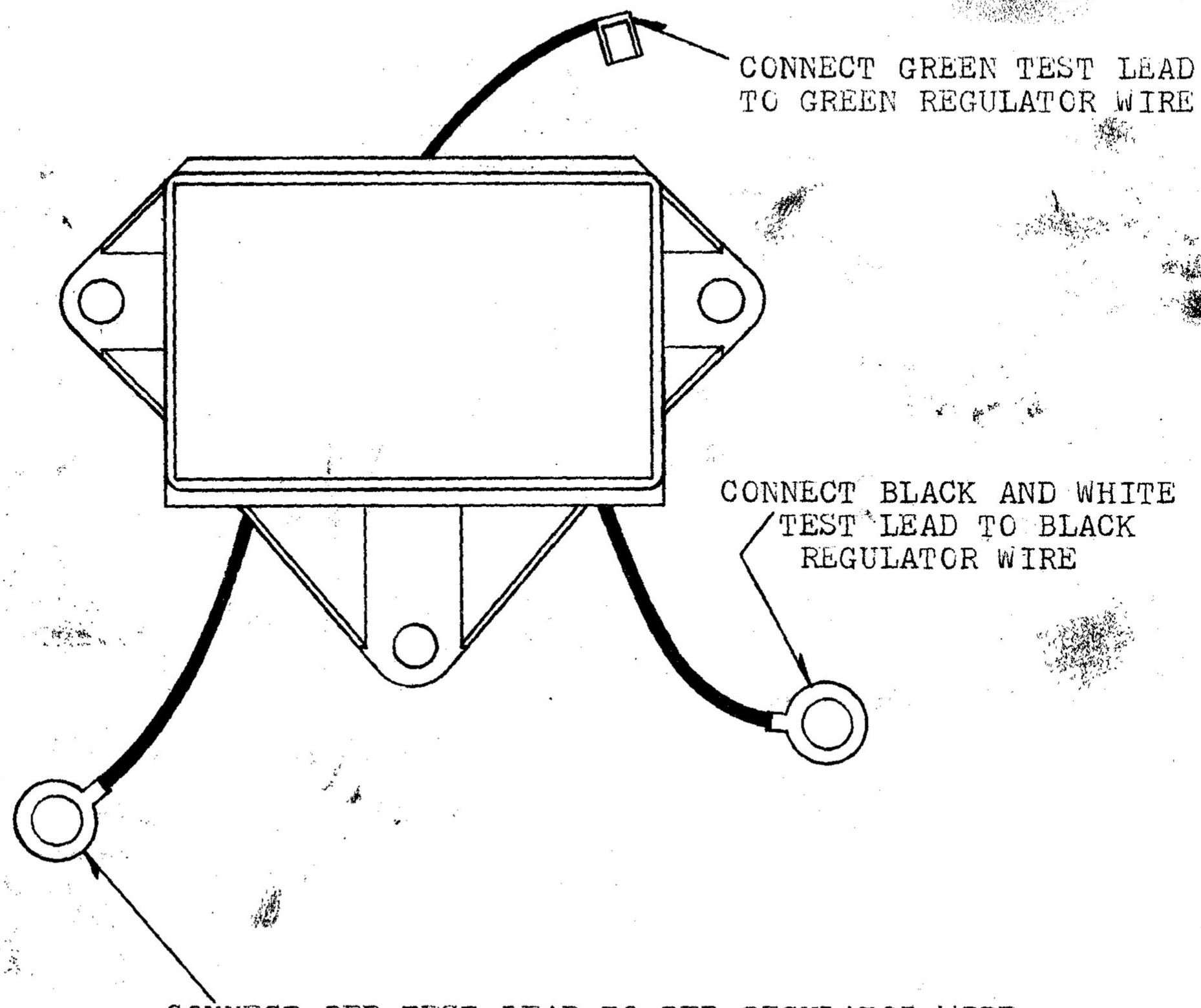

ON REGULATORS WITH PURPLE, ORANGE, AND/OR YELLOW WIRES, NO CONNECTION IS MADE TO THESE WIRES.

MOTOROLA

VOLTAGE REGULATOR TESTER

NO.5 UNIVERSAL TEST LEAD HOOK-UP

MOTOROLA: RS2J1, A, B, C
RS2-1
RS2JC1

NOTE: THIS HOOK-UP IS ONLY FOR REGULATORS USED ON ALTERNATORS WITH ONE FIELD BRUSH GROUNDED.

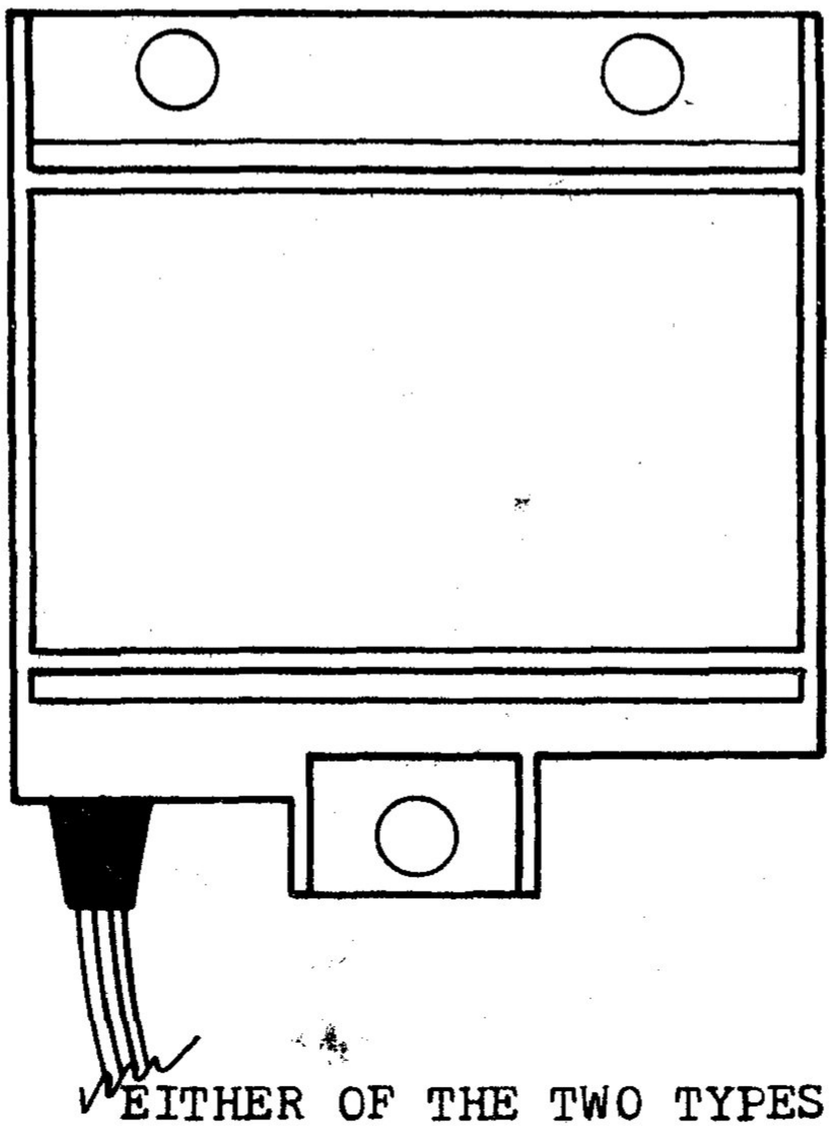

EITHER OF THE TWO TYPES OF CONNECTOR PLUGS BELOW

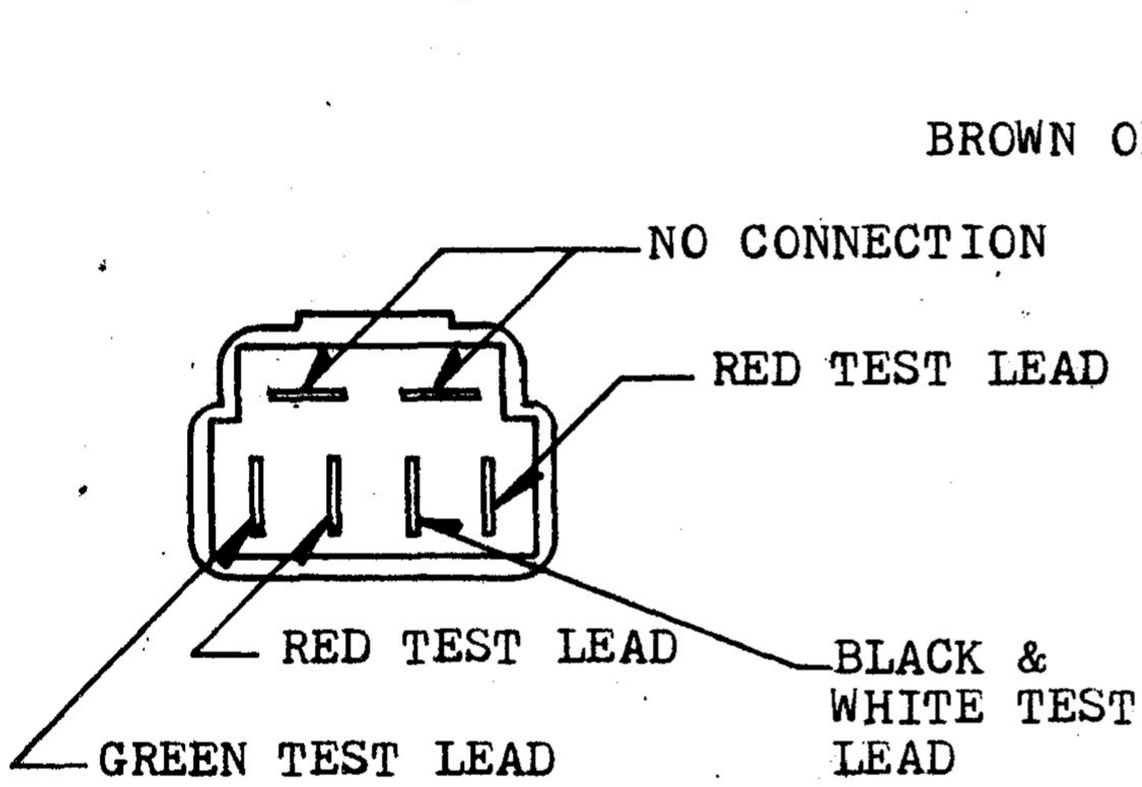

SOME REGULATORS HAVE THIS CONNECTOR PLUG

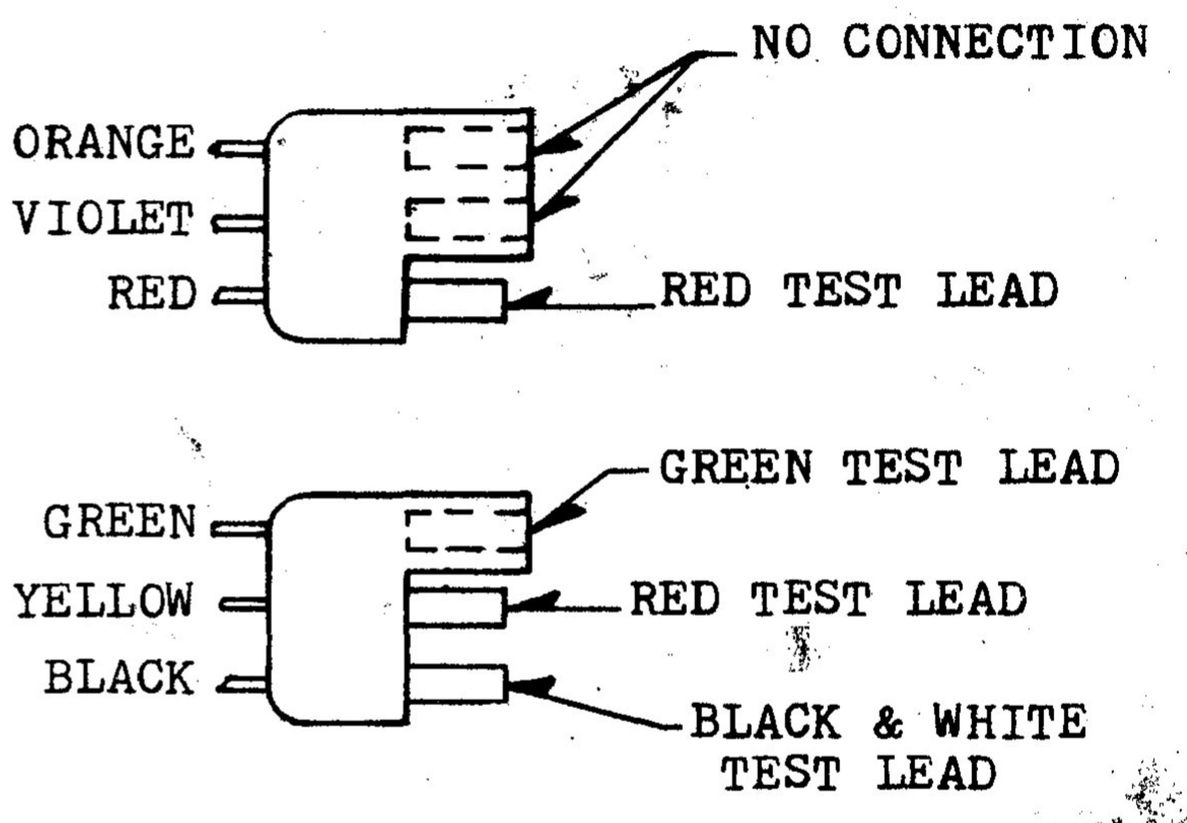

SOME REGULATORS HAVE THESE TWO MOLDED PLUGS

MOTOROLA

VOLTAGE REGULATOR TESTER

ETL-881-5 UNIVERSAL TEST LEAD HOOK-UP

MOTOROLA 8SC BRUSH SERIES ALTERNATORS

SUCH AS: 8RL2003, 12 VOLT
8RL3004, 24 VOLT (12,24,32 VOLT TESTER ONLY)
8RL4005, 32 VOLT " "

NOTE: TO TEST EXCITATION CIRCUIT HOOK UP REGULATOR AS SHOWN BELOW AND TEST, IF REGULATOR TESTS GOOD DISCONNECT THE RED TEST LEAD FROM THE REGULATOR TERMINAL BLOCK AND CONNECT IT TO THE EXCITATION TERMINAL ON THE REGULATOR, PUSH RESET BUTTON, RELEASE, WITH THE VOLTAGE CONTROL KNOB AT START THE VOLTMETER SHOULD READ APPROX. 3 TO 9 VOLTS, IF NOT EXCITATION CIRCUIT IS OPEN.

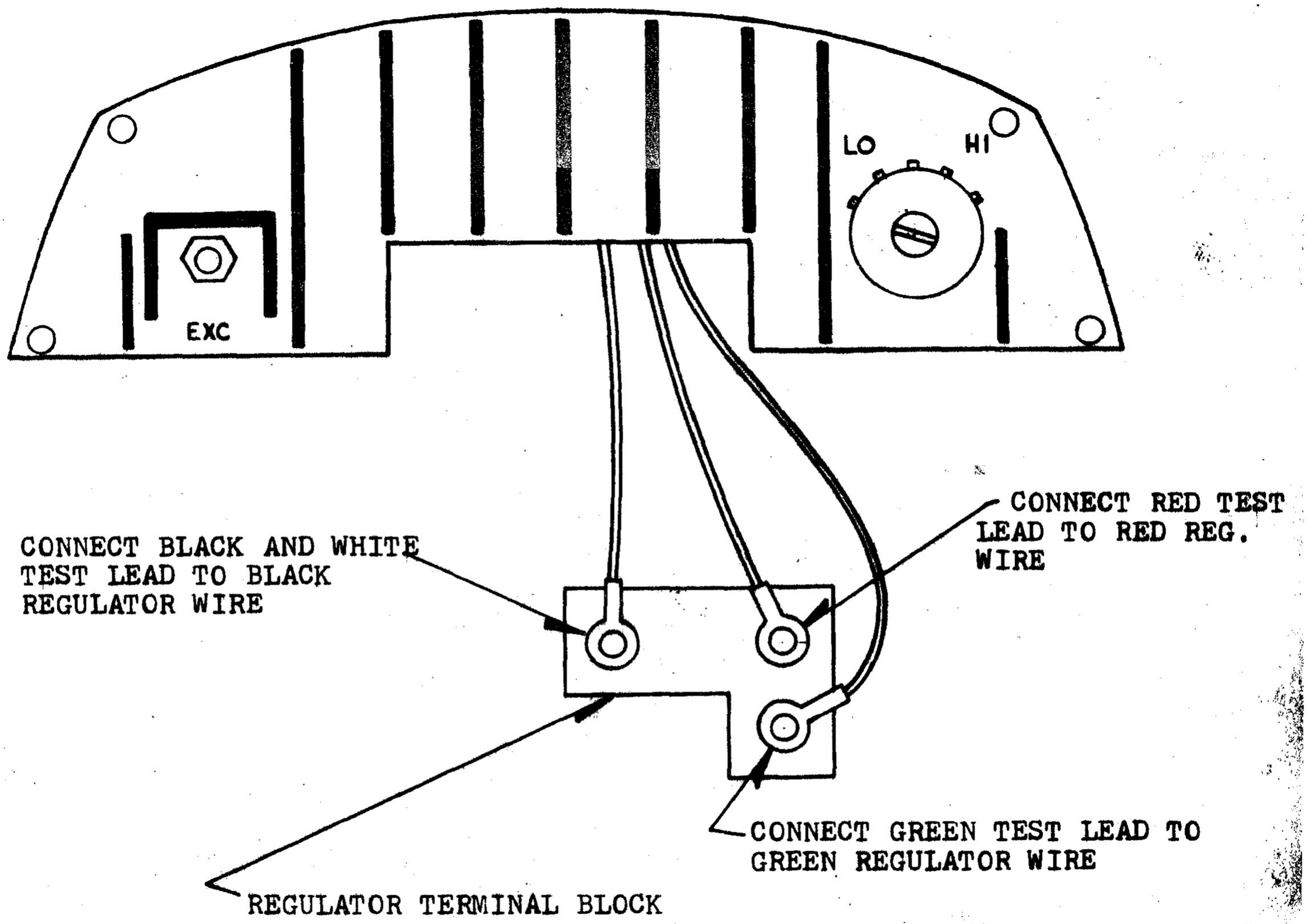

LUCAS

VOLTAGE REGULATOR TESTER

NO.5 UNIVERSAL TEST LEAD HOOK-UP

LUCAS SOLID STATE REGULATORS

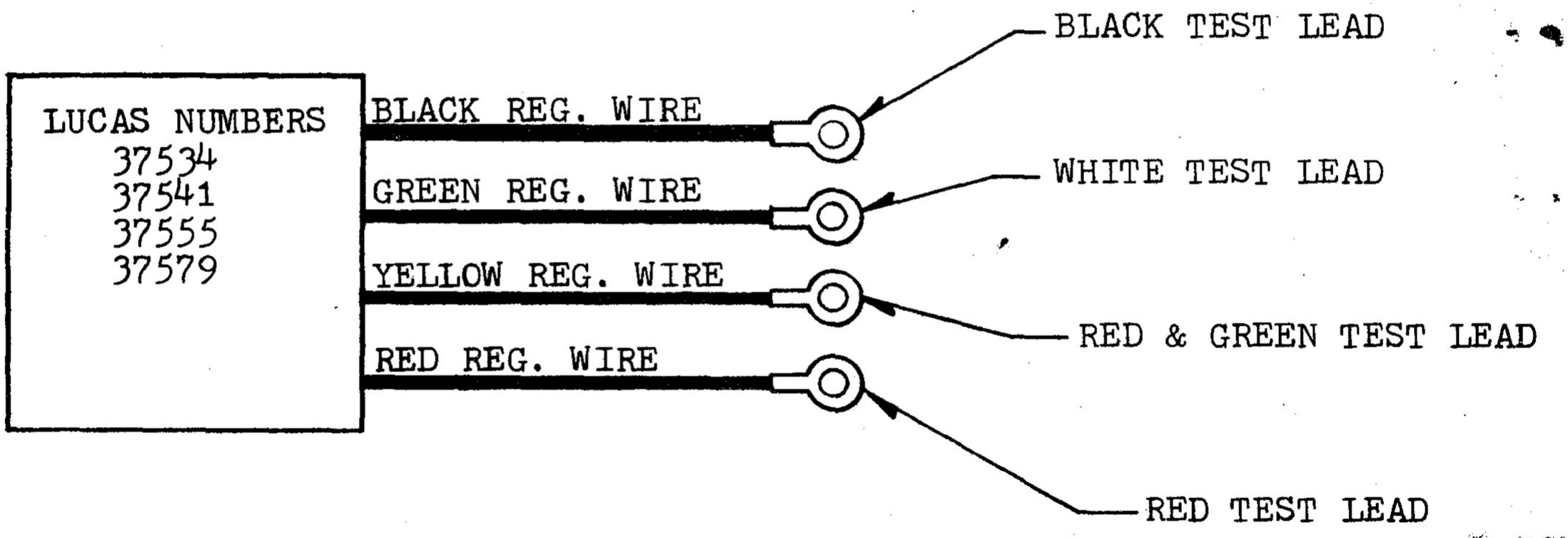



LUCAS

VOLTAGE REGULATOR TESTER

NO.5 UNIVERSAL TEST LEAD HOOK-UP

LUCAS SOLID STATE REGULATORS

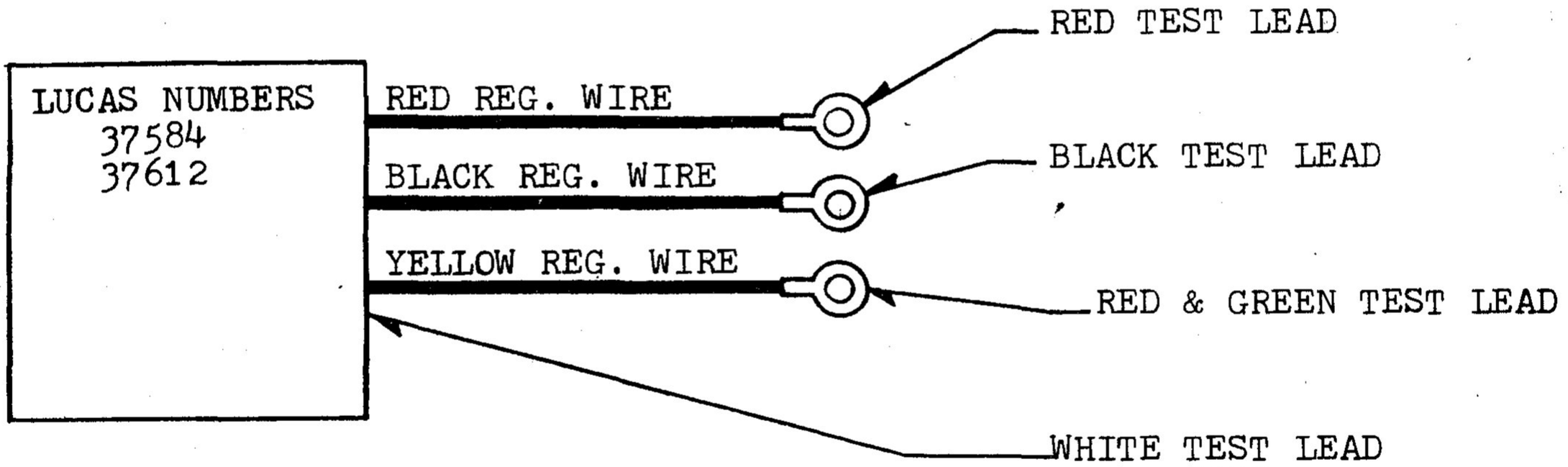

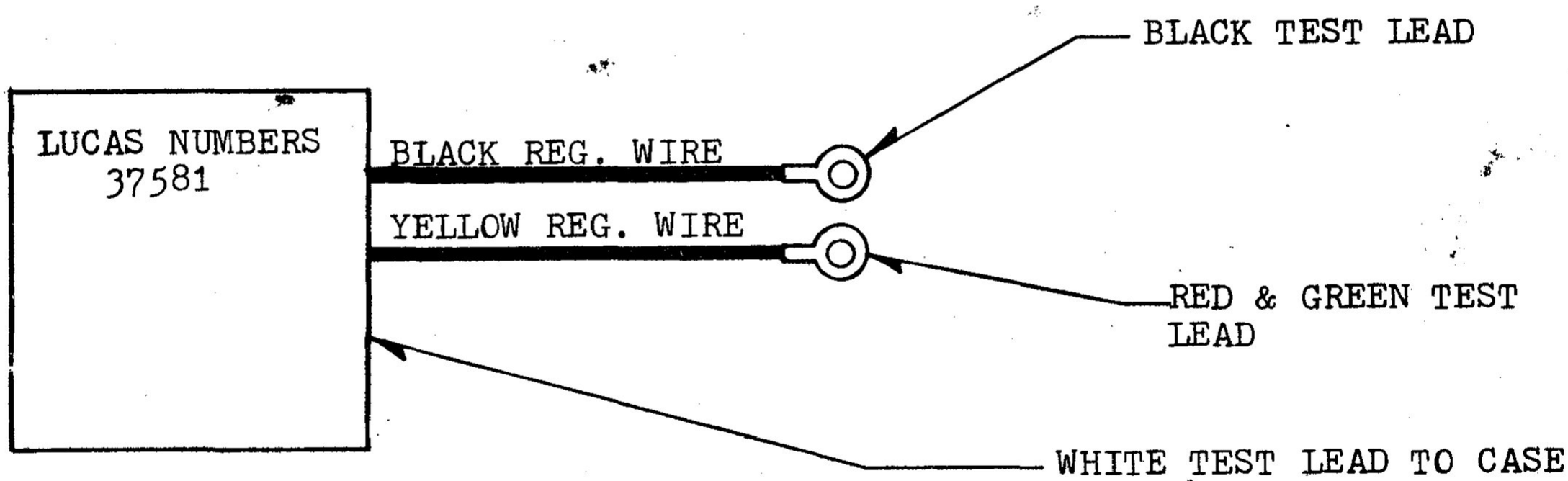

LUCAS

VOLTAGE REGULATOR TESTER

NO. 5 UNIVERSAL TEST LEAD HOOK-UP

LUCAS SOLID STATE REGULATORS

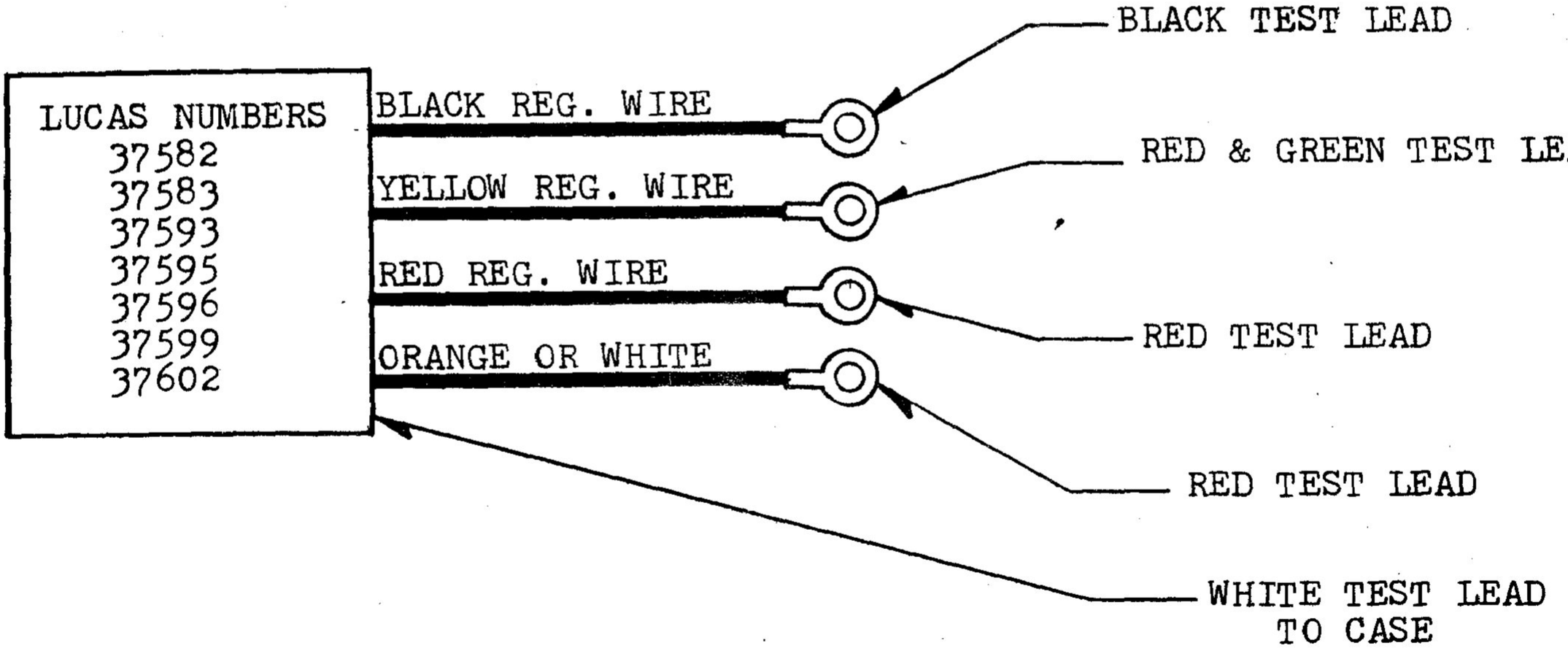

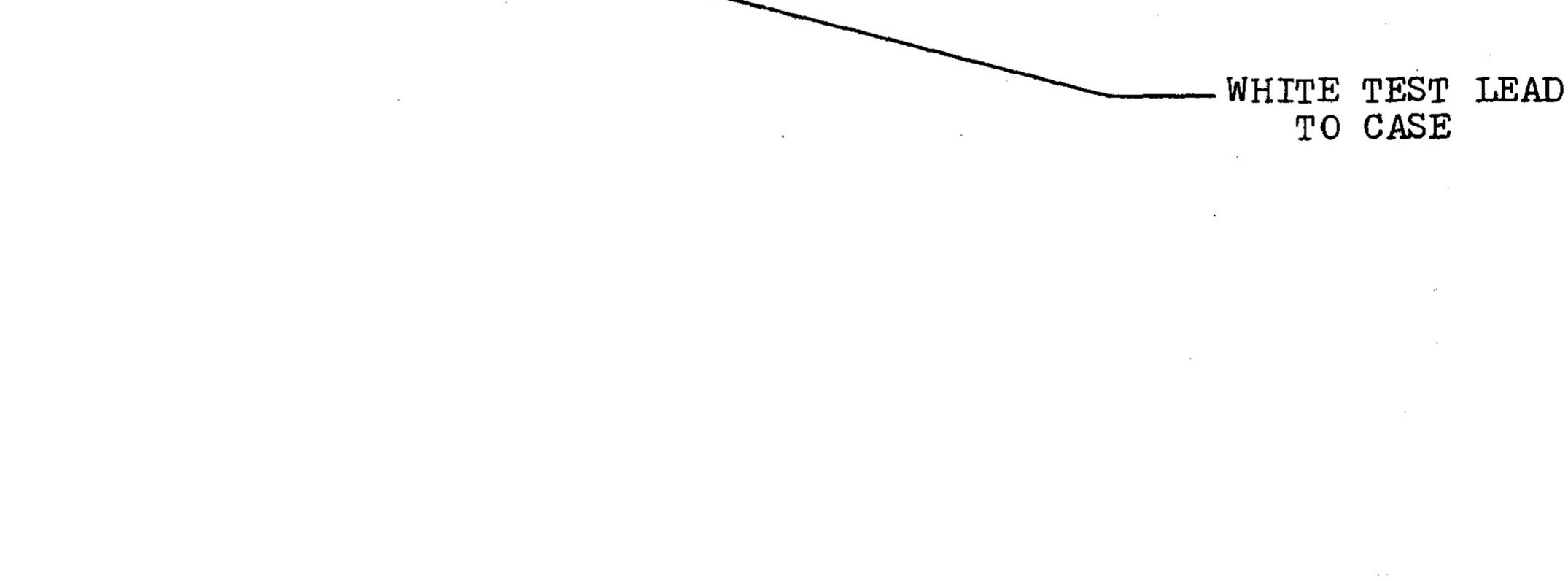

LUCAS

VOLTAGE REGULATOR TESTER

NO.5 UNIVERSAL TEST LEAD HOOK-UP

LUCAS SOLID STATE REGULATORS

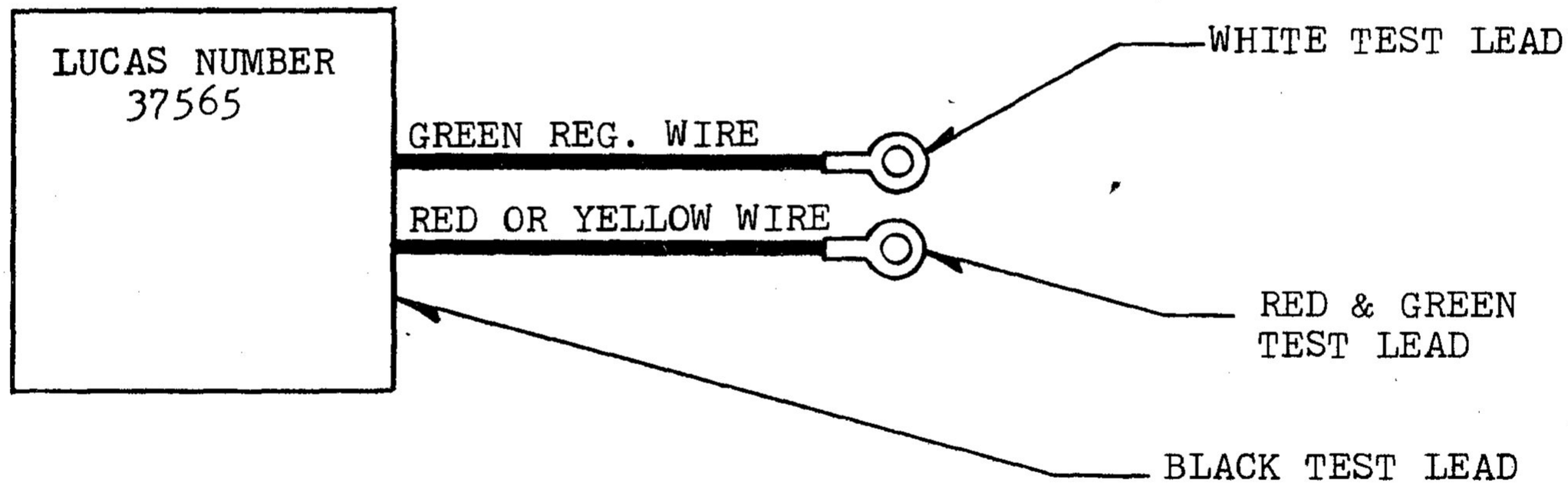

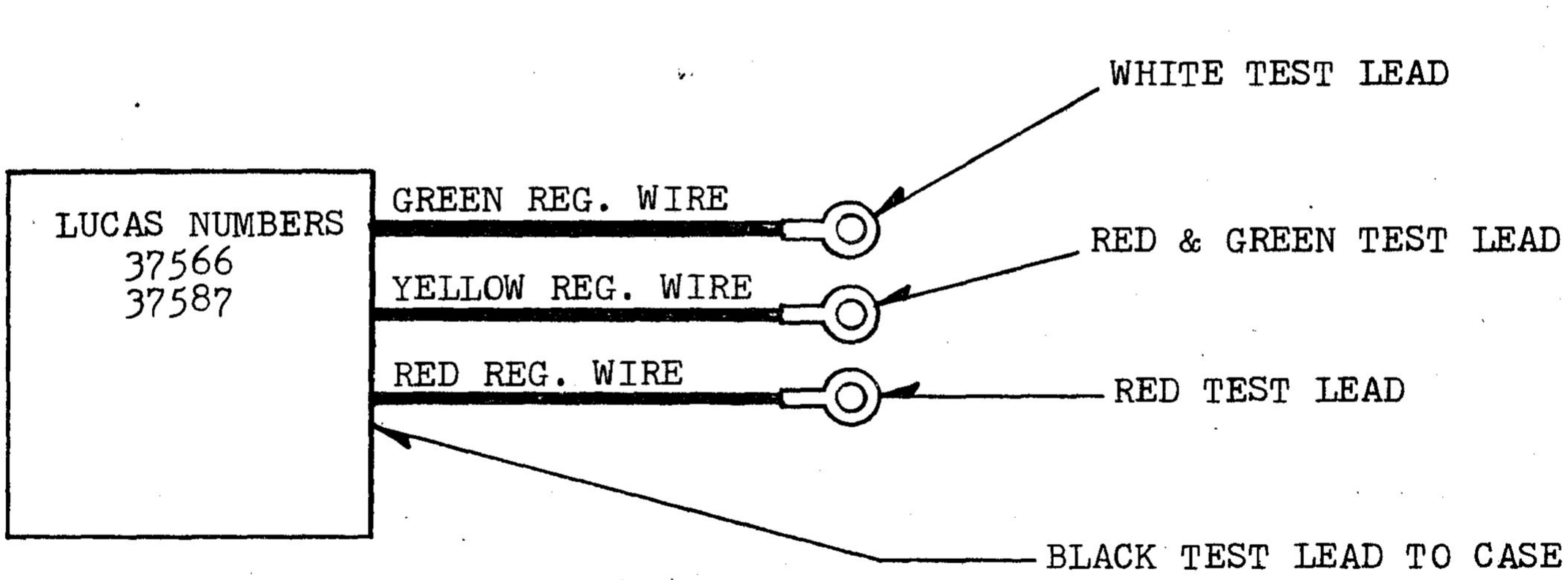

LUCAS

VOLTAGE REGULATOR TESTER

ETL-881-5 UNIVERSAL TEST LEAD HOOK-UP

LUCAS- 37423
37551

PRESTOLITE

VOLTAGE REGULATOR TESTER

ETL-881-5 UNIVERSAL TEST LEAD HOOK-up

PRESTOLITE VSH-6401A, 24 VOLT (24 VOLT TESTER ONLY)
OTHER SIMILIAR TWO WIRE, NEGATIVE GROUND, 12 & 24 VOLT REGULATORS

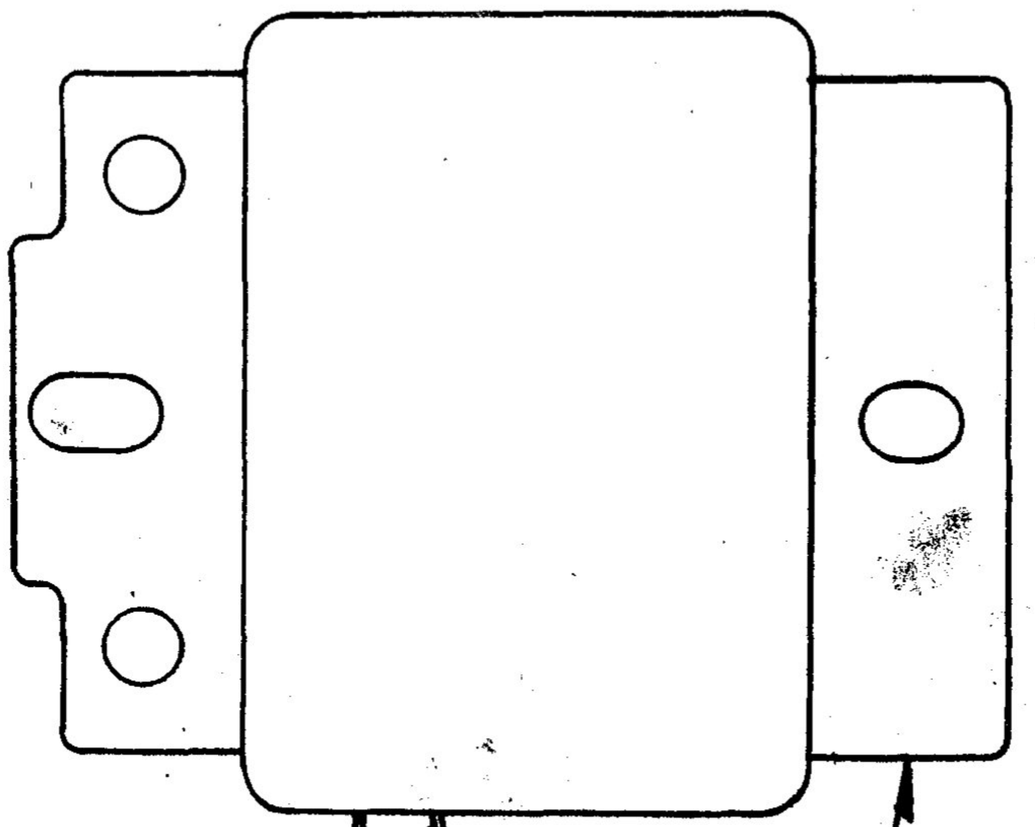

CONNECT BLACK AND WHITE TEST LEAD TO REGULATOR BASE

CONNECT GREEN TEST LEAD TO GREEN REGULATOR WIRE

CONNECT RED TEST LEAD TO RED REGULATOR LEAD

VOLTAGE REGULATOR TESTER

NO. 5 UNIVERSAL TEST LEAD HOOK-UP

NIEHOFF TYPE FOR: INTERNATIONAL HARVESTER
634328C1, 24 VOLT
(24 VOLT TESTER ONLY)

NOTE: TESTING WILL BE EASIER IF NO. 6-32 MACHINE SCREWS ARE INSTALLED IN EACH TERMINAL TO CONNECT TEST LEAD TO.

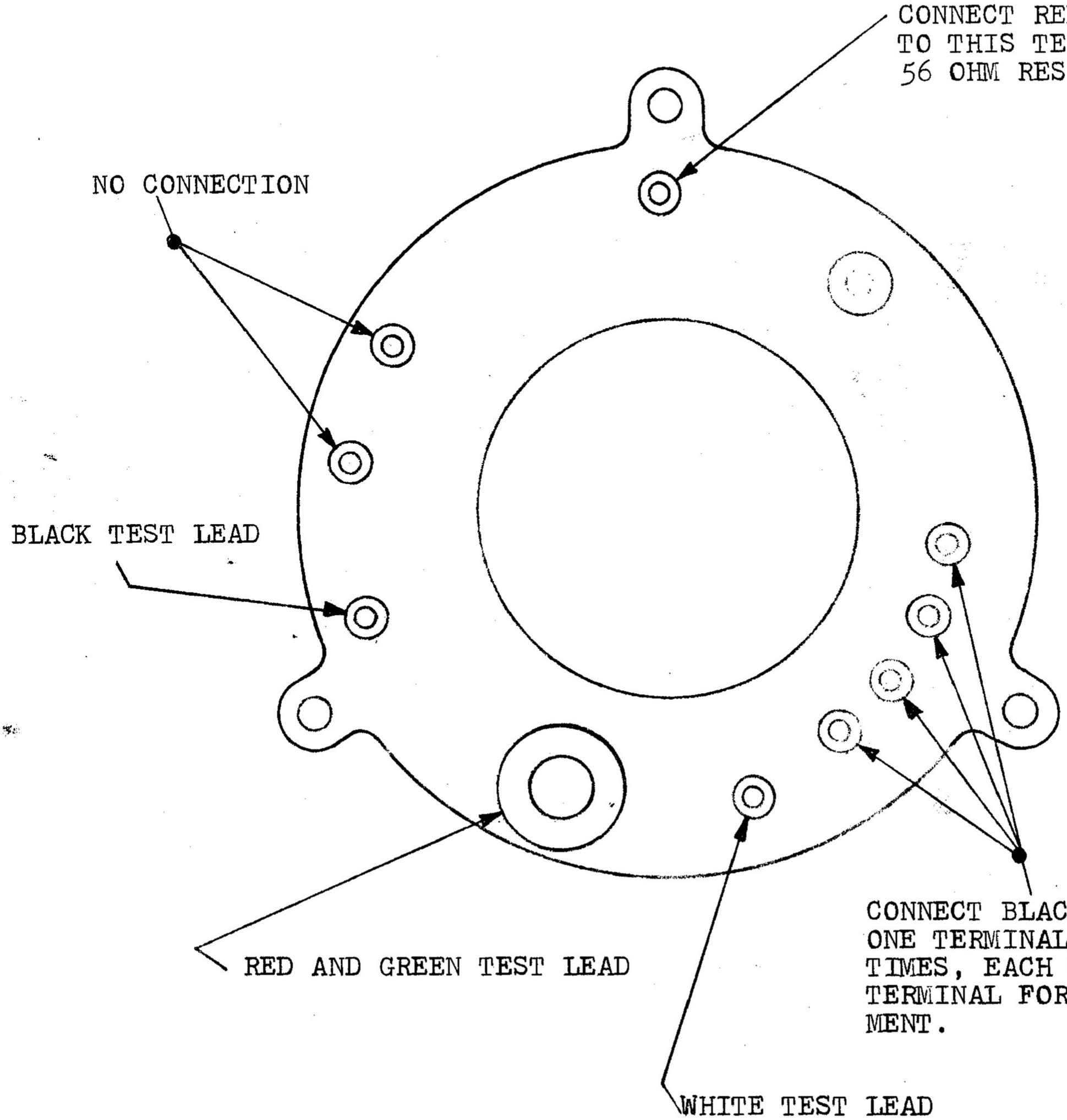

VOLTAGE REGULATOR TESTER

NO. 5 UNIVERSAL TEST LEAD HOOK-UP

NIEHOFF TYPE FOR: ALLIS CHALMERS - 12 VOLT
MASSEY FERGUSON - 12 VOLT

NOTE: TESTING WILL BE EASIER IF NO. 6-32 MACHINE SCREWS ARE INSTALLED IN EACH TERMINAL TO CONNECT TEST LEAD TO.

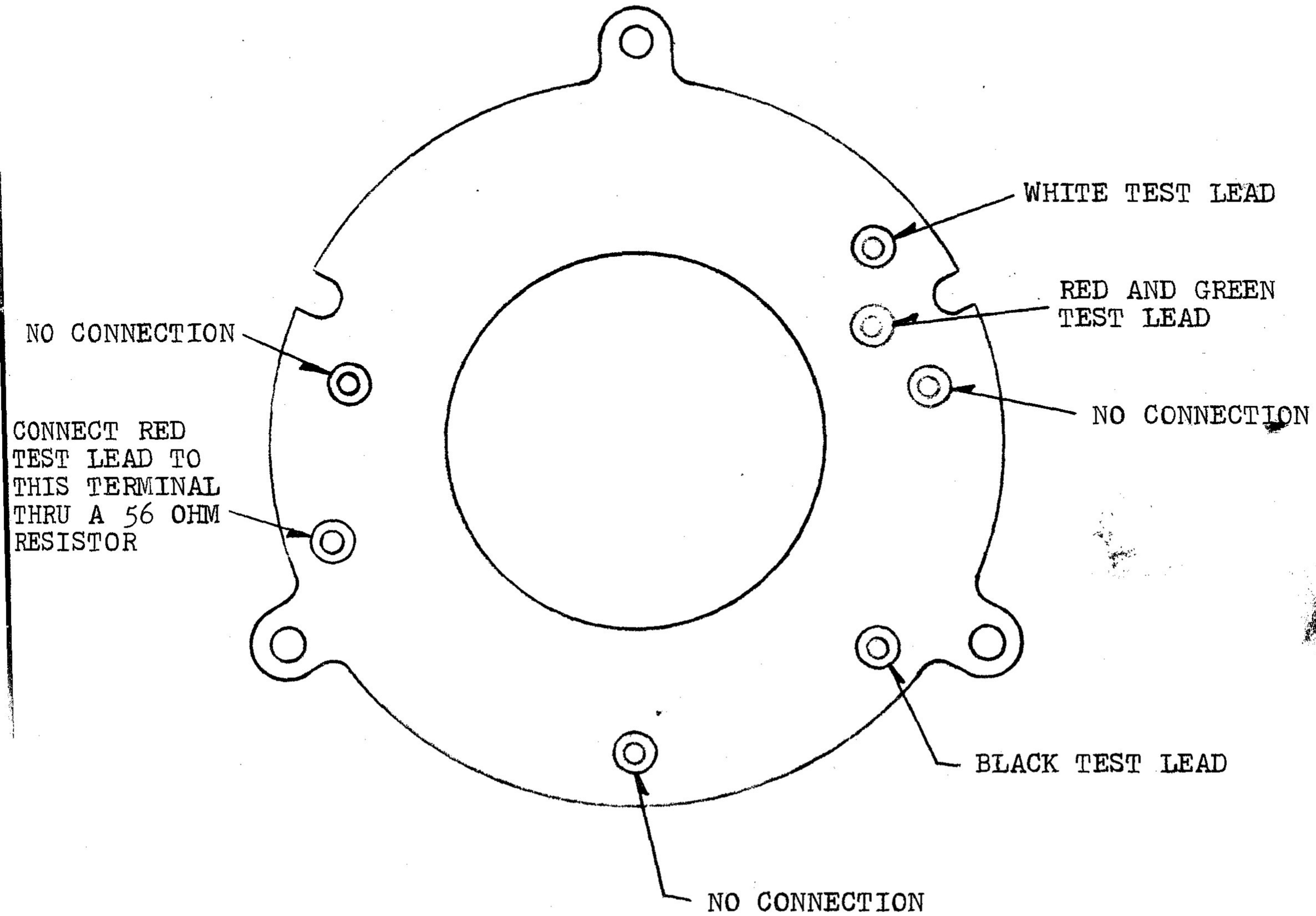

NIEHOFF

VOLTAGE REGULATOR TESTER

NO. 5 UNIVERSAL TEST LEAD HOOK-UP

NIEHOFF DESIGN SOLID STATE REGULATORS
VOLTAGE SETTING PRINTED ON REGULATOR CASE

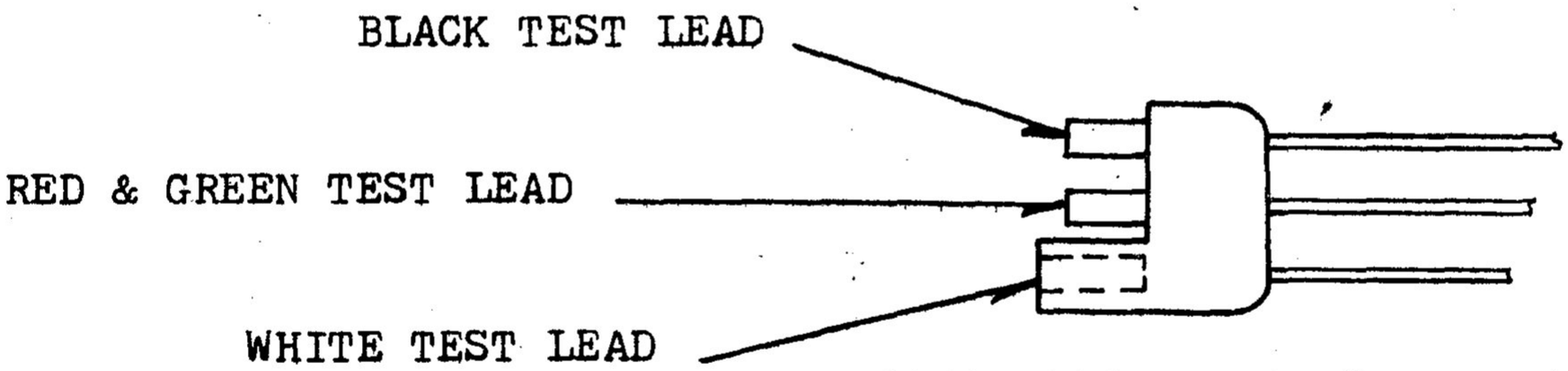

A150, A157, & A158 ONLY

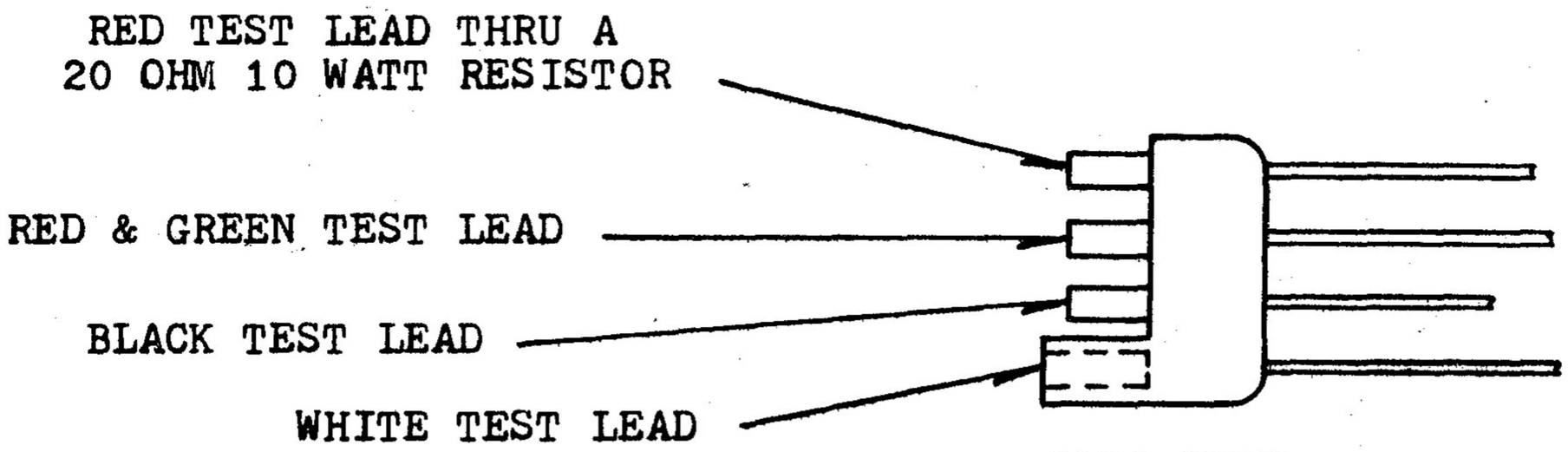

A172 ONLY

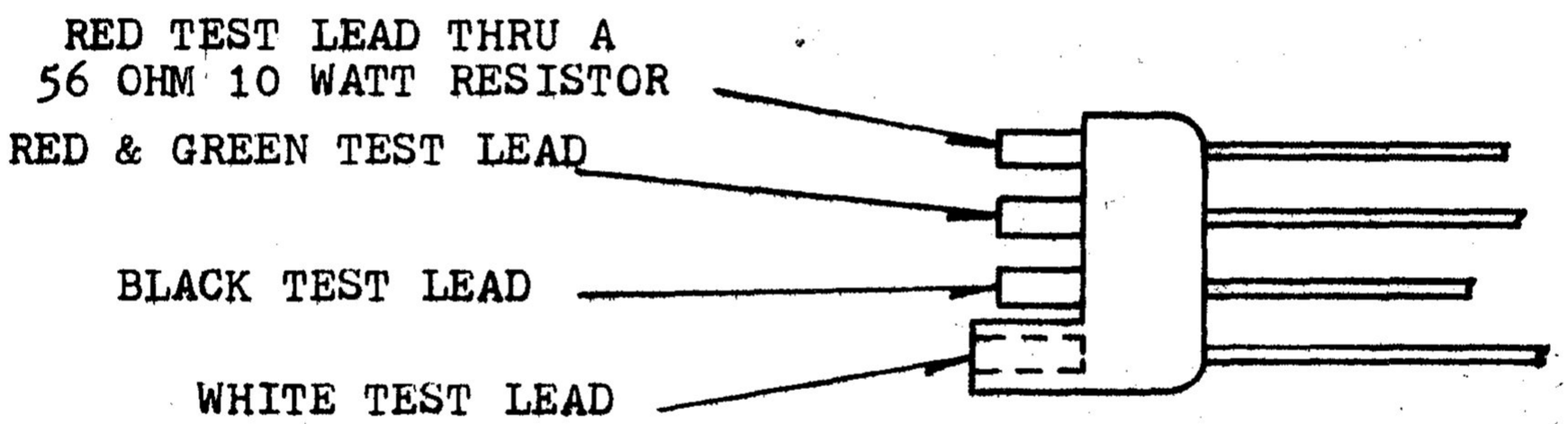

A171 & A173 ONLY

NOTE: RESISTORS SHOWN MUST BE USED DURING TESTING OR POSSIBLE REGULATOR DAMAGE MAY RESULT.

NIEHOFF

VOLTAGE REGULATOR TESTER

NO.5 UNIVERSAL TEST LEAD HOOK-UP

NIEHOFF DESIGN SOLID STATE REGULATORS
VOLTAGE SETTING PRINTED ON REGULATOR CASE

A151
A152 (24 VOLT TESTER ONLY)
A171 (24 VOLT TESTER ONLY)

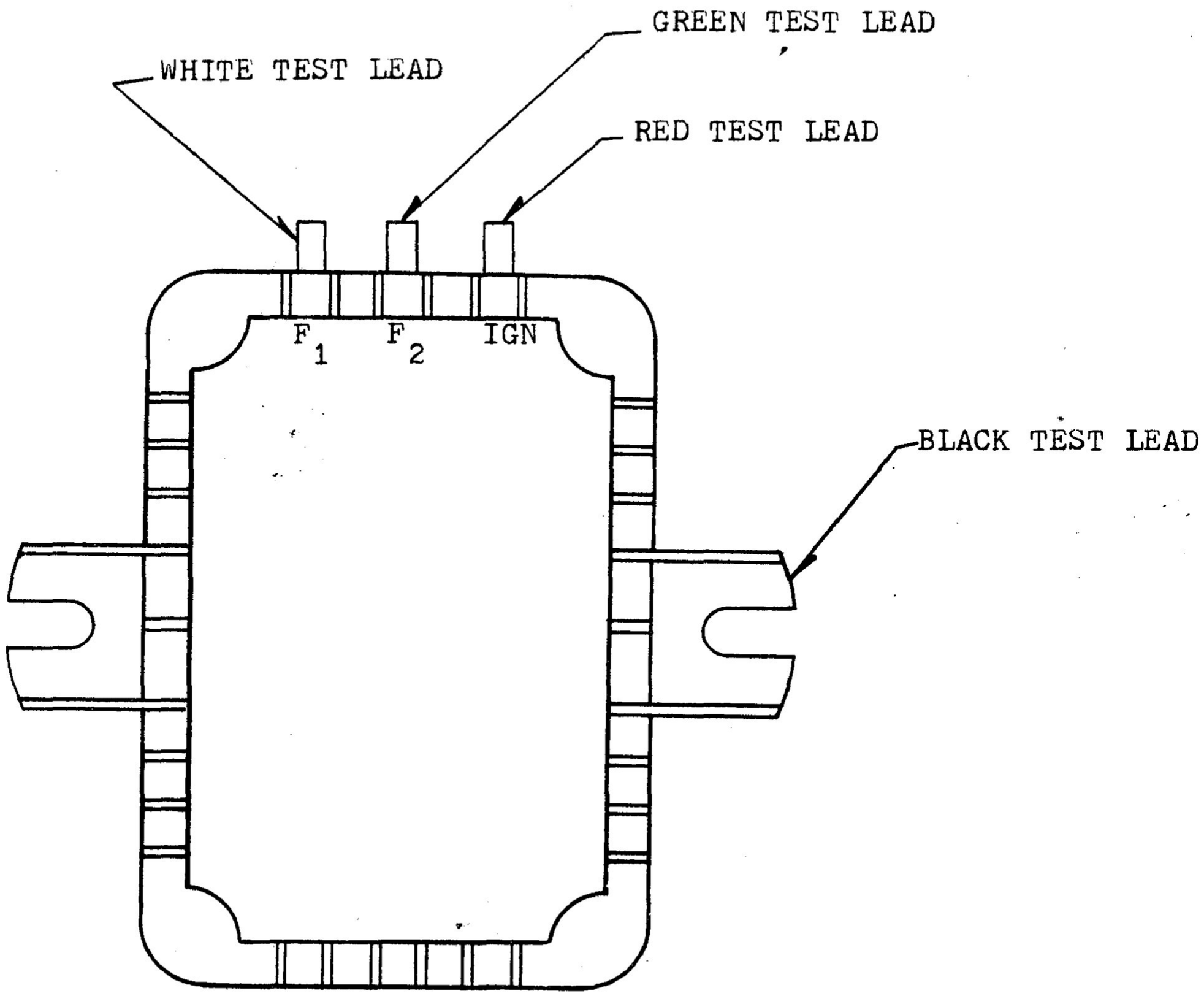

VOLTAGE REGULATOR TESTER

NO. 5 UNIVERSAL TEST LEAD HOOK-UP

MOTOROLA: 8RD2008
8RD2011
8RD2012

NOTE: USE AC AUXILIARY TEST LEAD WITH NO. 5 LEAD

CONNECT RED TEST LEAD	TO	RED REGULATOR WIRE
CONNECT RED TEST LEAD	TO	VIOLET OR BLUE REG. WIRE
CONNECT BLACK TEST LEAD	TO	BLACK REGULATOR WIRE
CONNECT YELLOW & WHITE LEAD	TO	YELLOW REGULATOR WIRE
CONNECT GREEN TEST LEAD	TO	GREEN REGULATOR WIRE
NO CONNECTION IS MADE	TO	ORANGE REGULATOR WIRE

VOLTAGE REGULATOR TESTER

NO.5 UNIVERSAL TEST LEAD HOOK-UP

MOTOROLA: 8RF2001
8RF2003
8RF2010
8RF3004 (24 VOLT TESTER ONLY)

NOTE: USE AC AUXILIARY TEST LEAD WITH NO. 5 LEAD

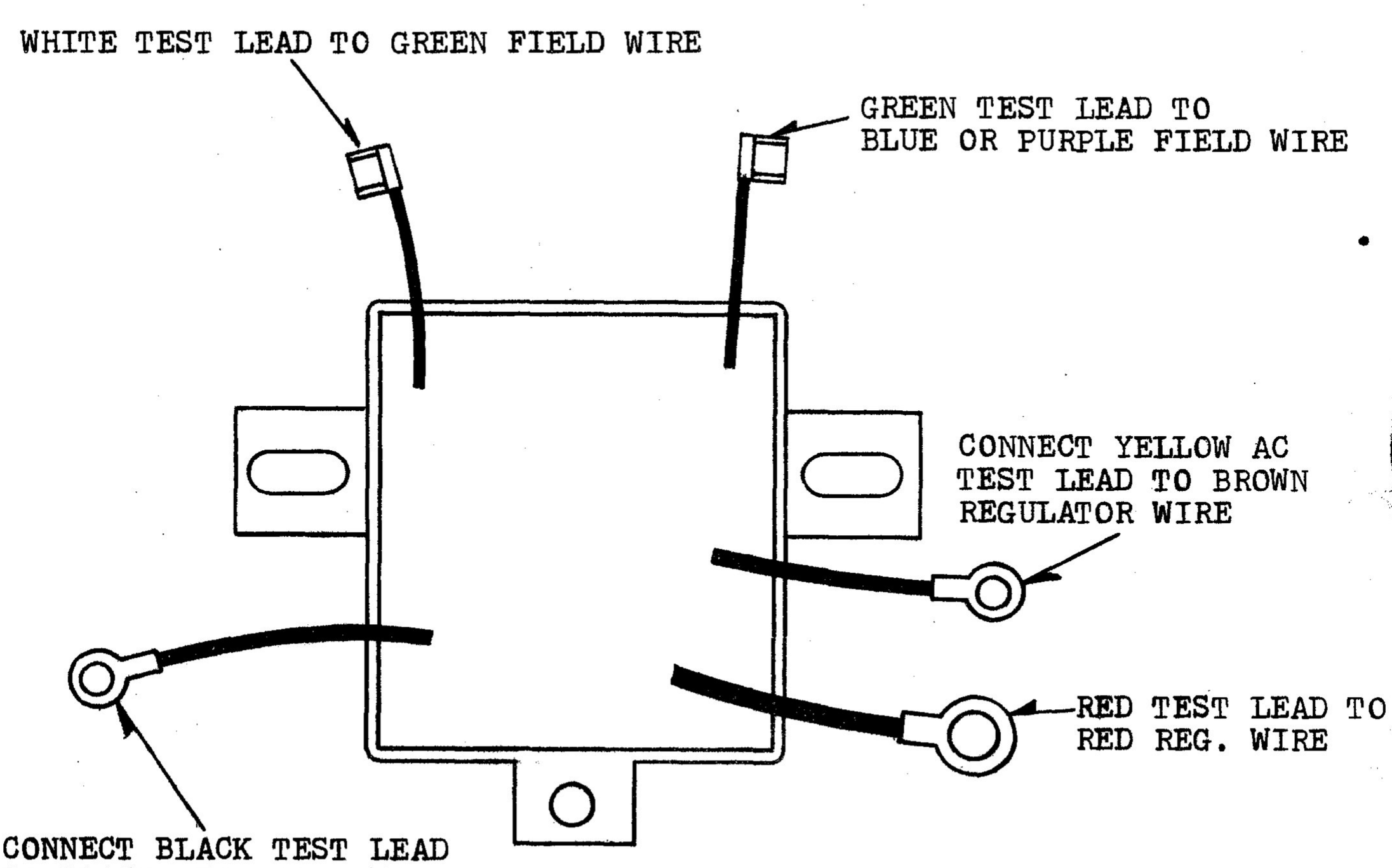

NOTE: NO CONNECTION IS MADE TO YELLOW, PURPLE, OR ORANGE INDICATOR LIGHT AND/OR EXICITATION WIRES.

JAPANESE

VOLTAGE REGULATOR TESTER

NO.5 UNIVERSAL TEST LEAD HOOK-UP

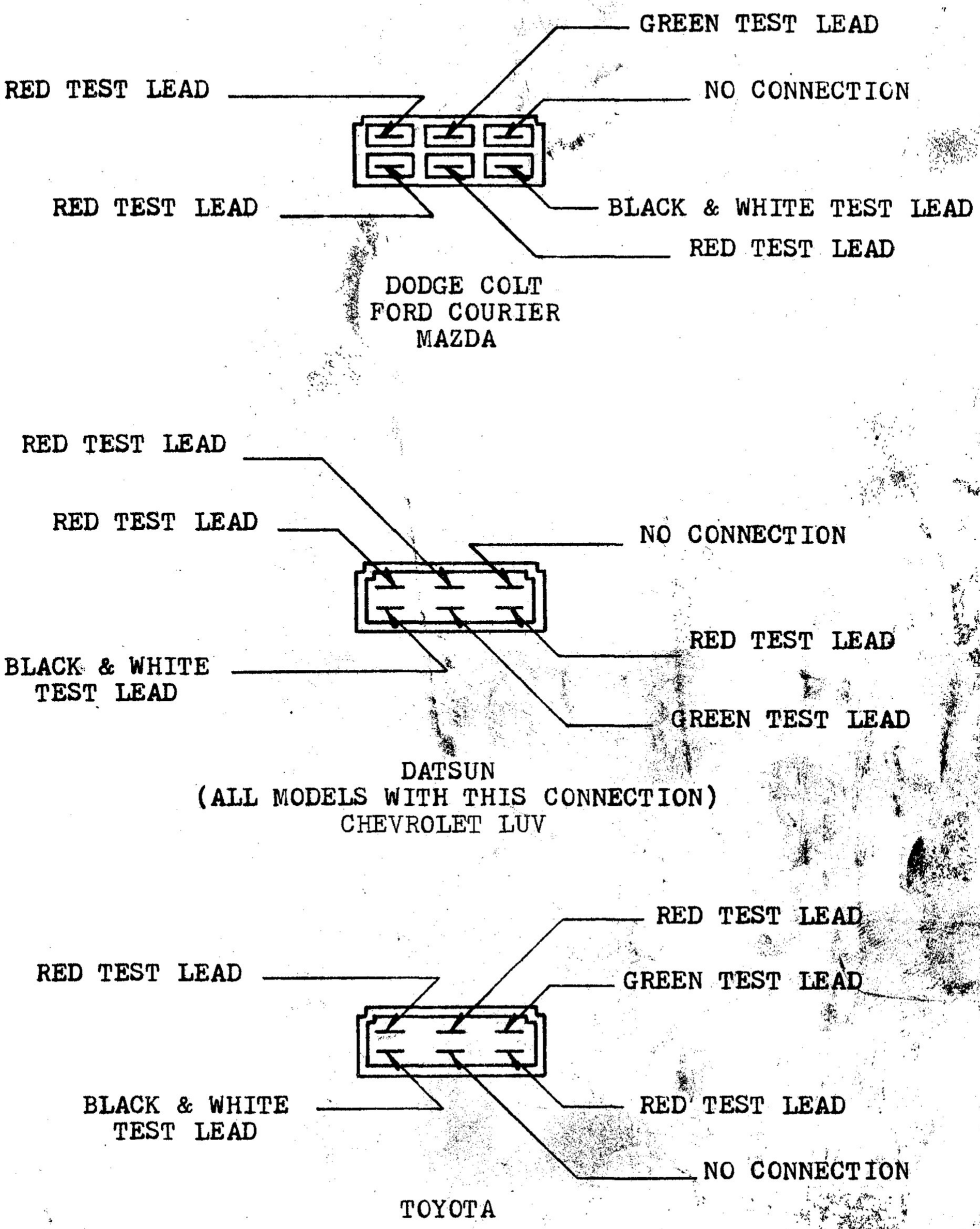

NOTE: DUE TO THE CLOSE SPACING OF THE REGULATOR TERMINALS IT IS SUGGESTED THAT SHORT LENGTHS OF WIRE WITH THE CORRECT PUSH-ON TERMINALS BE USED TO CONNECT THE UNIVERSAL TEST LEAD TO THE REGULATOR.

VOLTAGE REGULATOR TESTER

NO.5 UNIVERSAL TEST LEAD HOOK-UP

DATSUN WITH THE CONNECTORS SHOWN BELOW

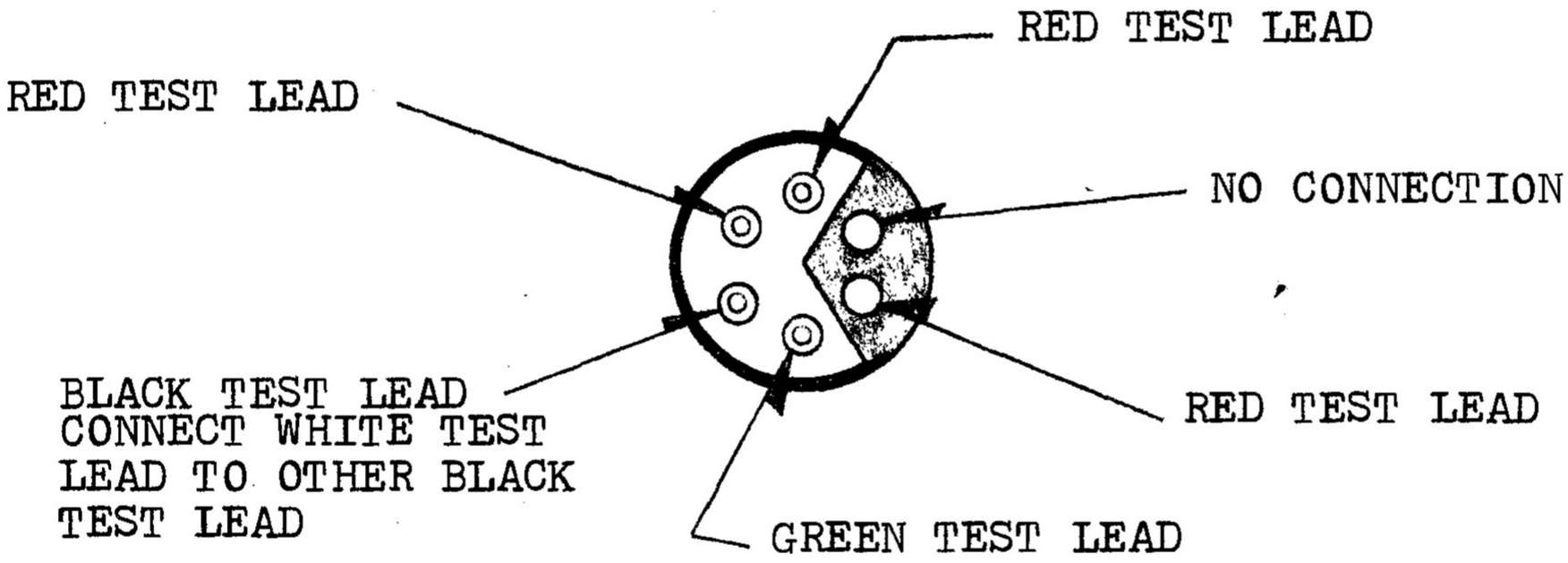

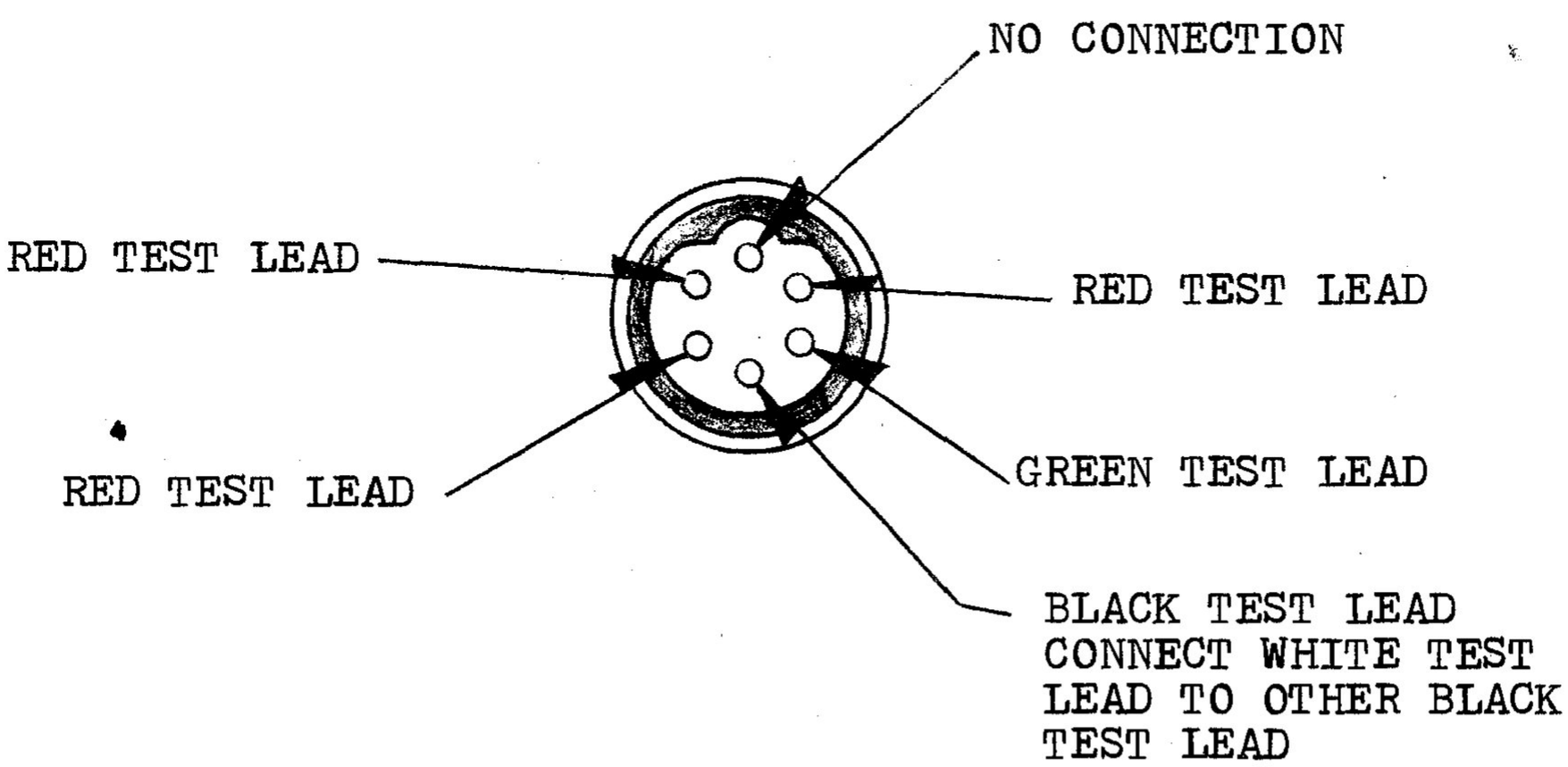

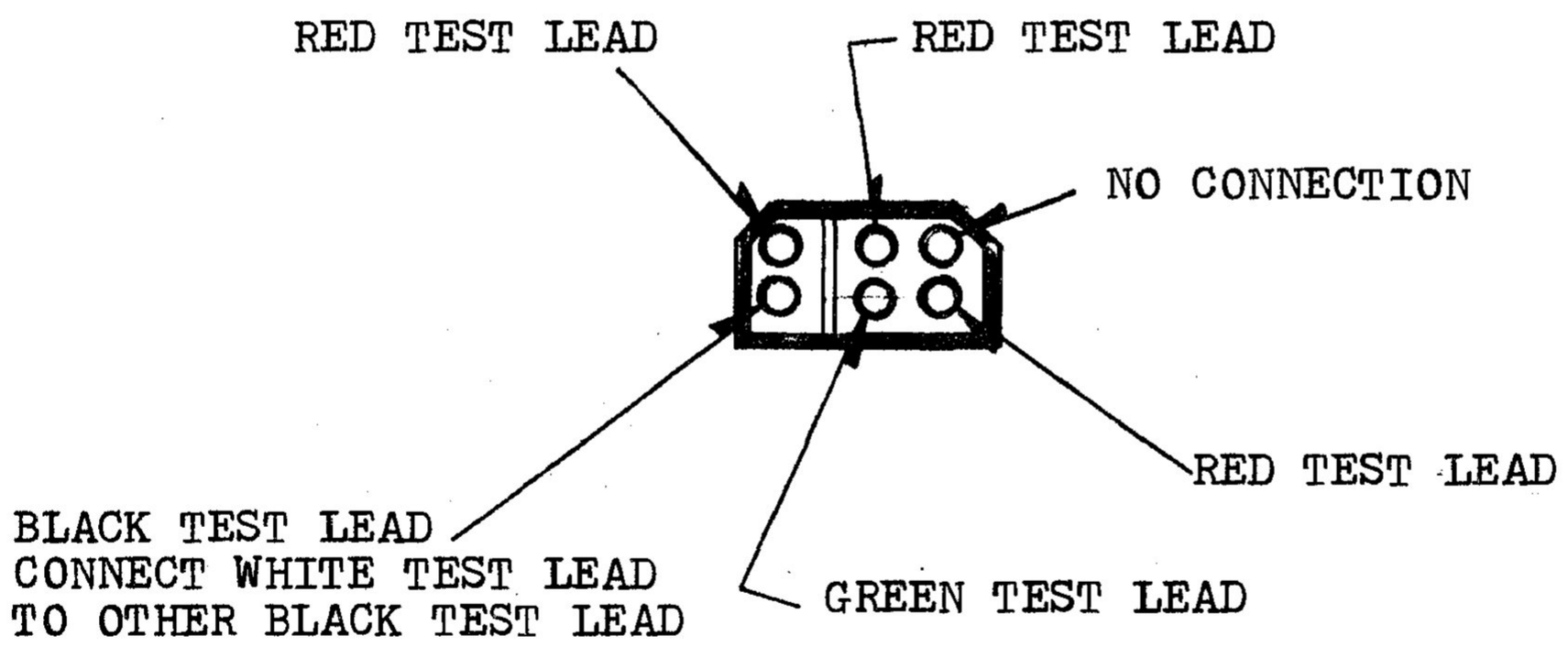

NOTE: DUE TO THE CLOSE SPACING OF THE REGULATOR TERMINALS IT IS SUGGESTED THAT SHORT LENGTHS OF WIRE WITH THE CORRECT MATCHING TERMINALS BE USED TO CONNECT THE UNIVERSAL TEST LEAD TO THE REGULATOR.

VOLTAGE REGULATOR TESTER

NO.5 UNIVERSAL TEST LEAD HOOK-UP

BOSCH AS USED ON: ALFA, AUDI,
MERCEDES, DASHER, RABBIT, SCIROCCO

BOSCH NOS. 0-192-052-001 AND
004-007-008-011

NOTE: REGULATOR MAY TEST LOW AND BE SERVICEABLE IN A ALTERNATOR

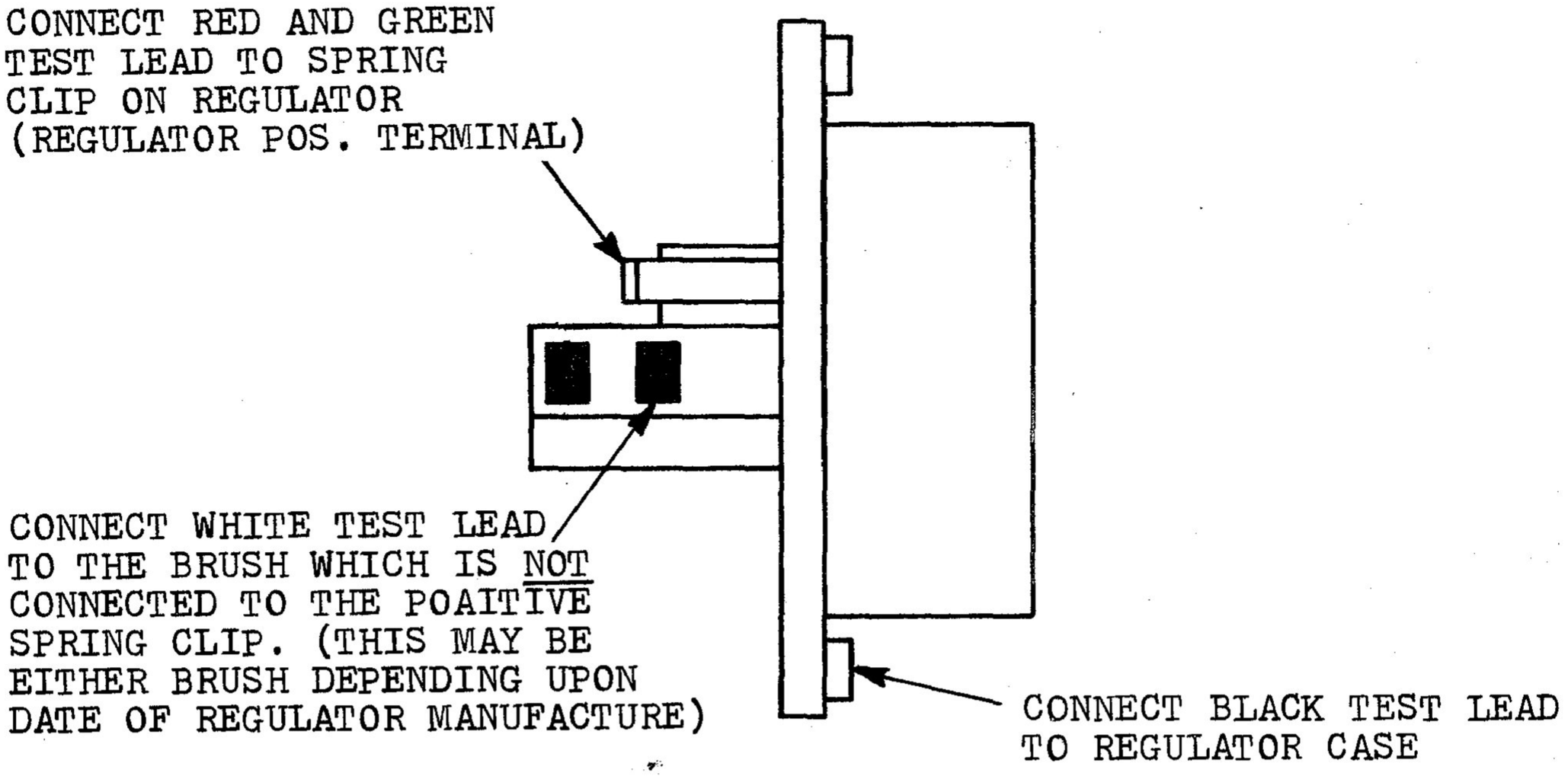

VOLTAGE REGULATOR TESTER

NO. 5 UNIVERSAL TEST LEAD HOOK-UP

BOSCH 0-190-600-004
0-190-600-005
0-190-600-009
0-190-600-010

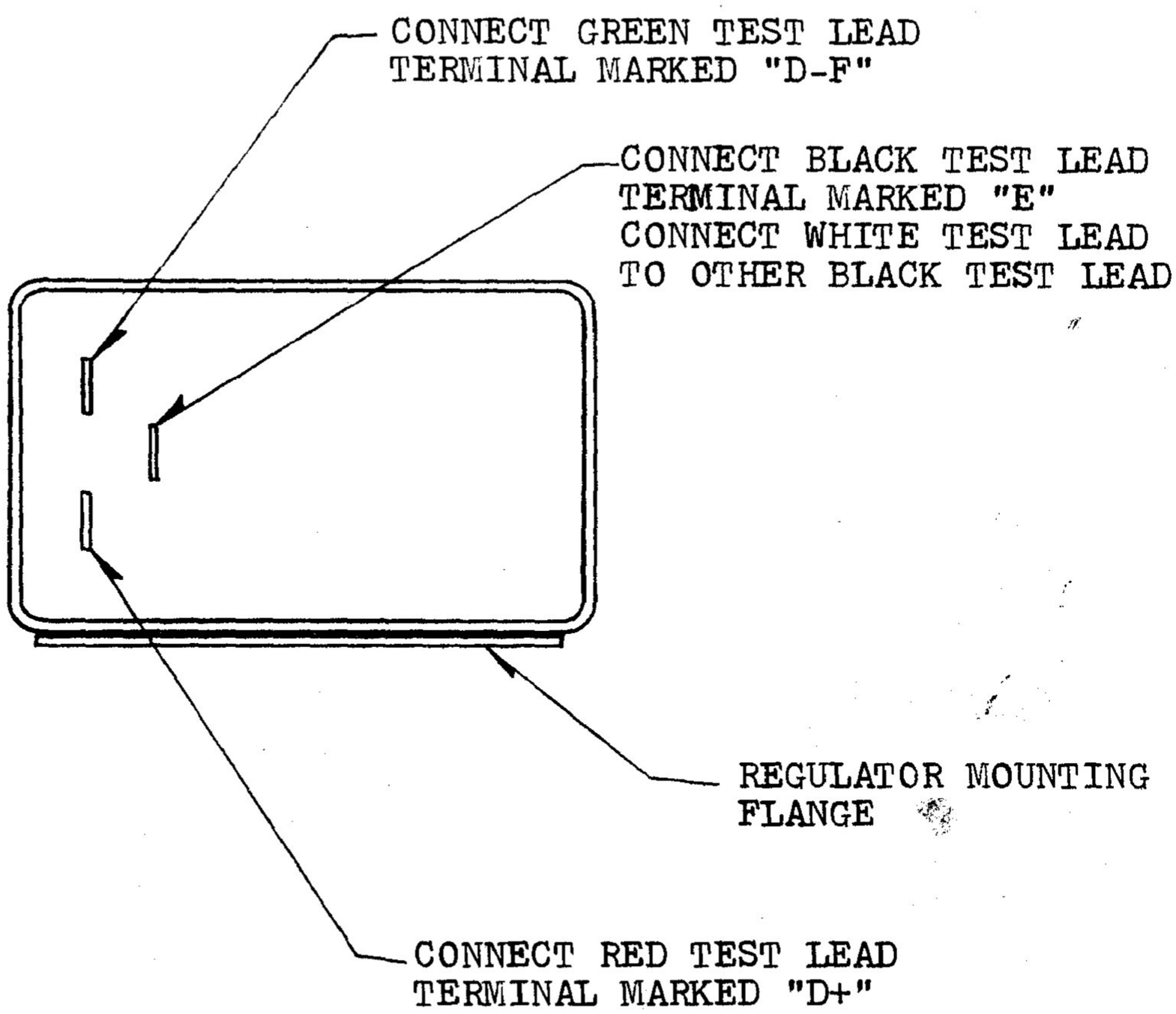

VOLTAGE REGULATOR TESTER

ETL-881-5 UNIVERSAL TEST LEAD HOOK-UP

VOLKSWAGEN- 021 903 803A
0 190 601 006

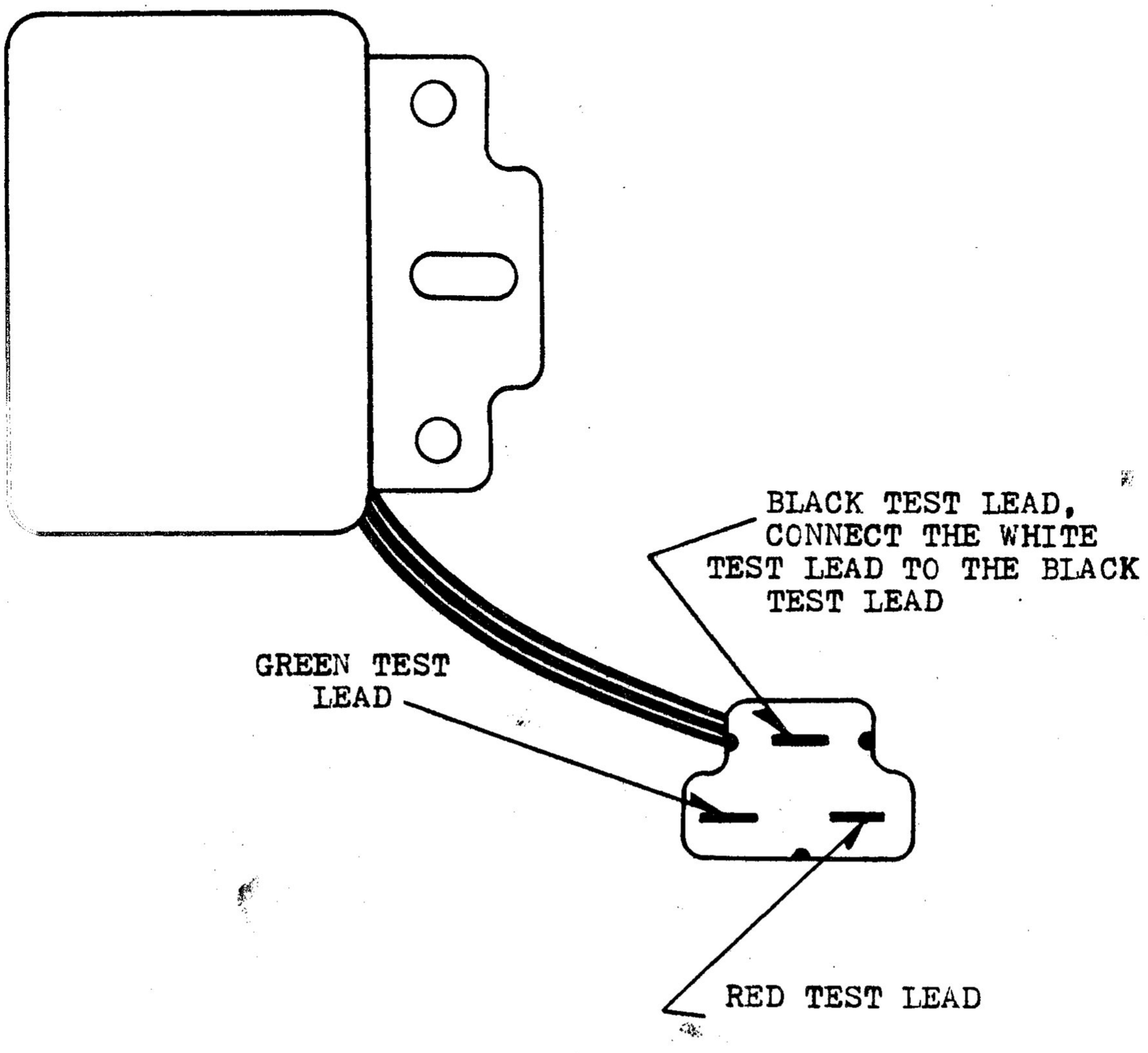

VOLTAGE REGULATOR TESTER

NO.5 UNIVERSAL TEST LEAD HOOK-UP

MOTOROLA: 8RH2001
VOLKSWAGEN: 043- 903- 803, VW MB2

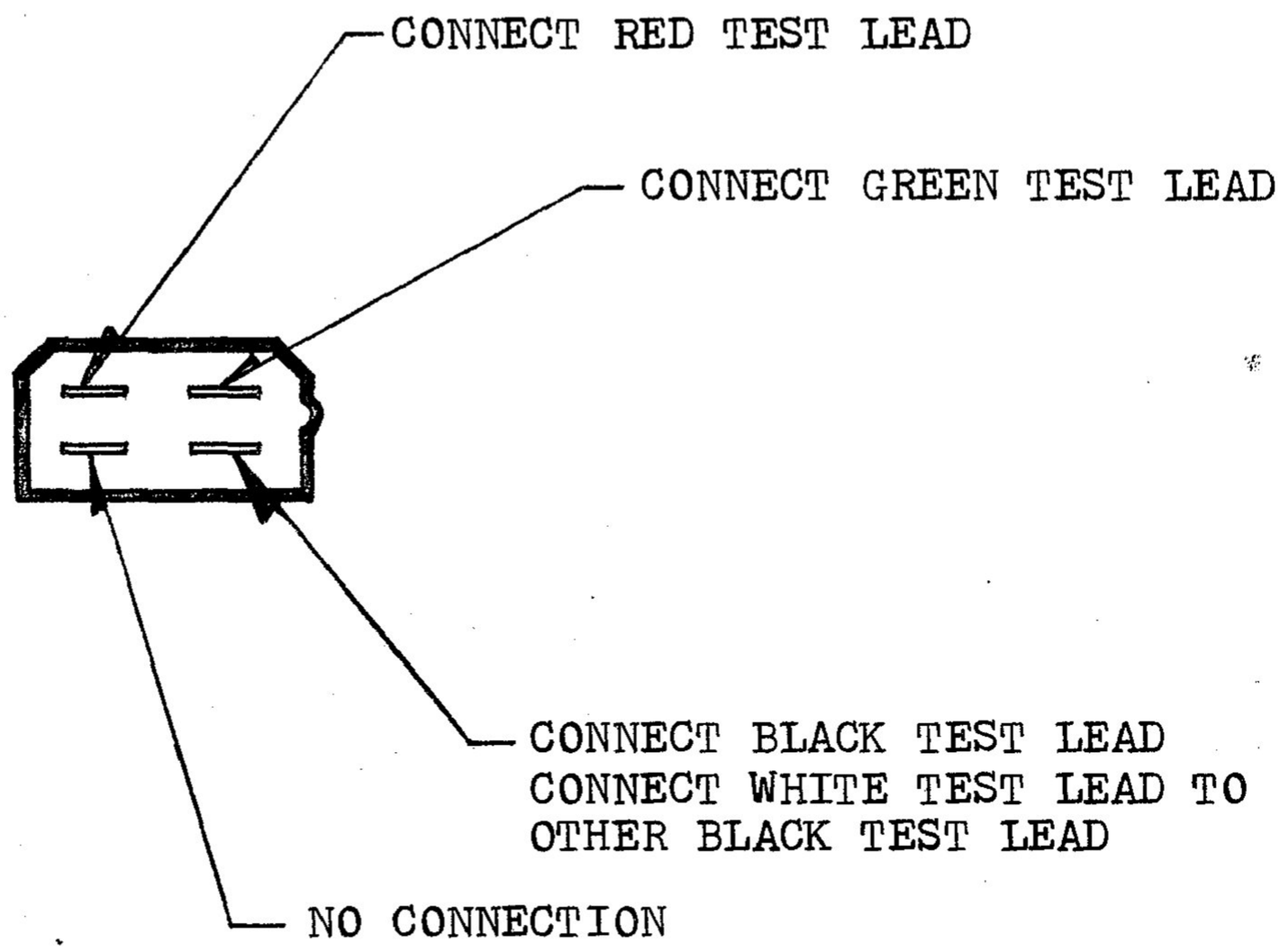

NOTE: THE MOTOROLA TEST LEAD NO. 15 CAN BE USED WITH THIS REGULATOR, HOWEVER THERE IS NO MATCHING "KEY" TO PREVENT THE LEAD FROM BEING CONNECTED WRONG. TO CONNECT THE LEAD MAKE SURE THE RED WIRE ON THE TEST LEAD GOES TO THE RED WIRE ON THE REGULATOR. USE CARE TO MAKE SURE THE TERMINALS IN THE TEST LEAD MATE TO THE TERMINALS IN THE REGULATOR CONNECTOR.