MB-28/38 & PL-28/38 ALTERNATOR RIPPLE TESTERS

INTRODUCTION

An Alternator is a machine that converts mechanical energy into electrical energy.

In a vehicle, the alternator supplies electrical power for charging the battery and operating accessories. The duty of the voltage regulator is to regulate this charge so as not to under-charge or over-charge the battery.

Fig. 1 shows a typical wiring diagram for a charging system.

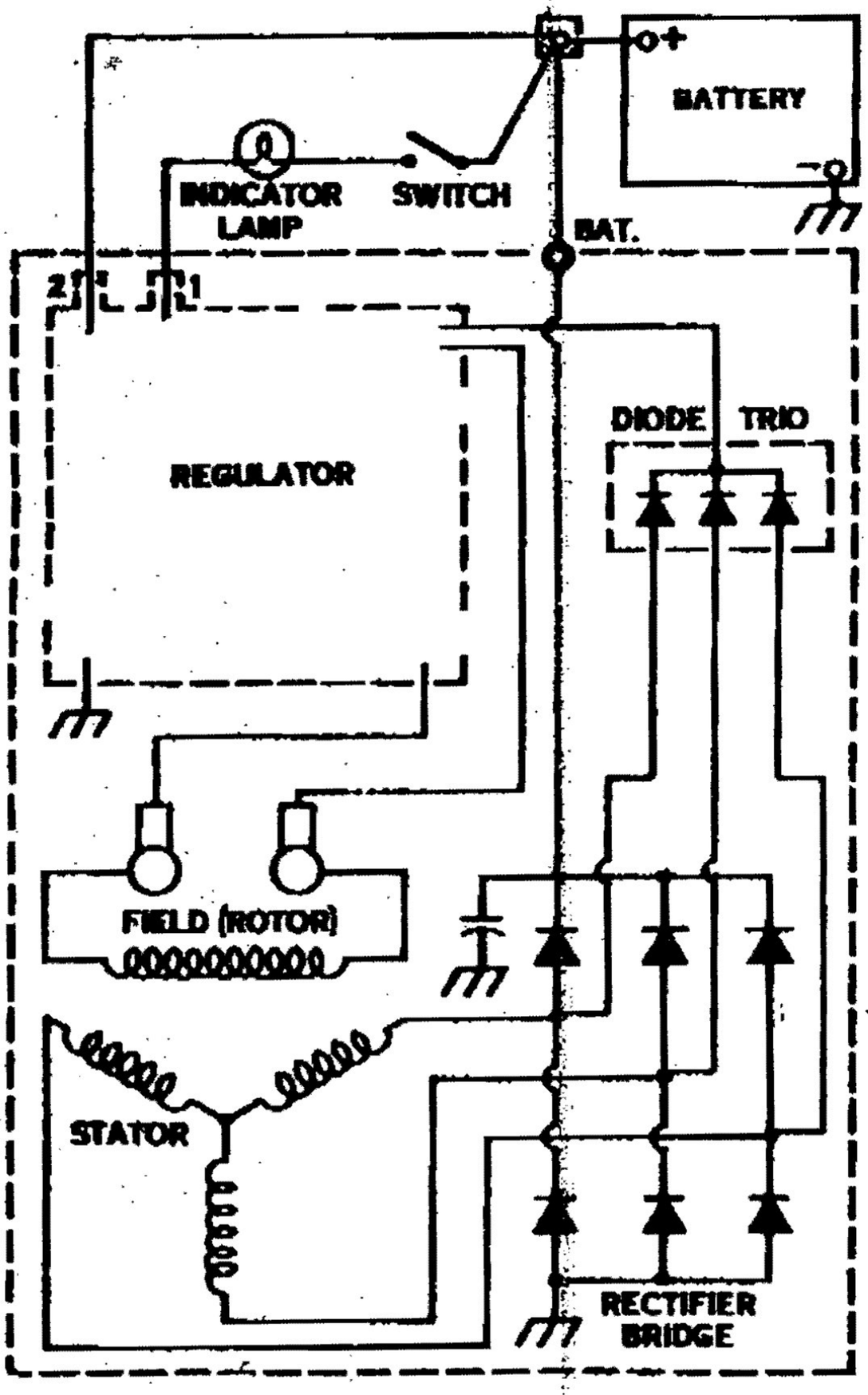

Fig. 1

An alternators basic design provides that a rotor turns within some stationary windings. There are three internally connected stator windings that produce 3-phase high output (AC) current. However, this AC needs to be rectified into direct current (DC) for use in vehicles and this is accomplished by a rectifier bridge arrangement of diodes.

2

A failure in one of these rectifying diodes causes the alternators output to decrease by approximately 10% of the total output available. On a 60 Amp unit, this is only about 6 Amps. However if this condition were to continue unnoticed it will put an overload on the remaining two good alternator charging phases and in time will cause them to break down and put the charging system out of order. This may take place in an hour, a day or several weeks. Probably on some lonely country road.

If this problem is analyzed before the system totally collapsed, see Fig. 2 & 3, you would find high ripple voltage in the charging system. With the Alternator Tester this condition can be tested in seconds.

Fig. 2

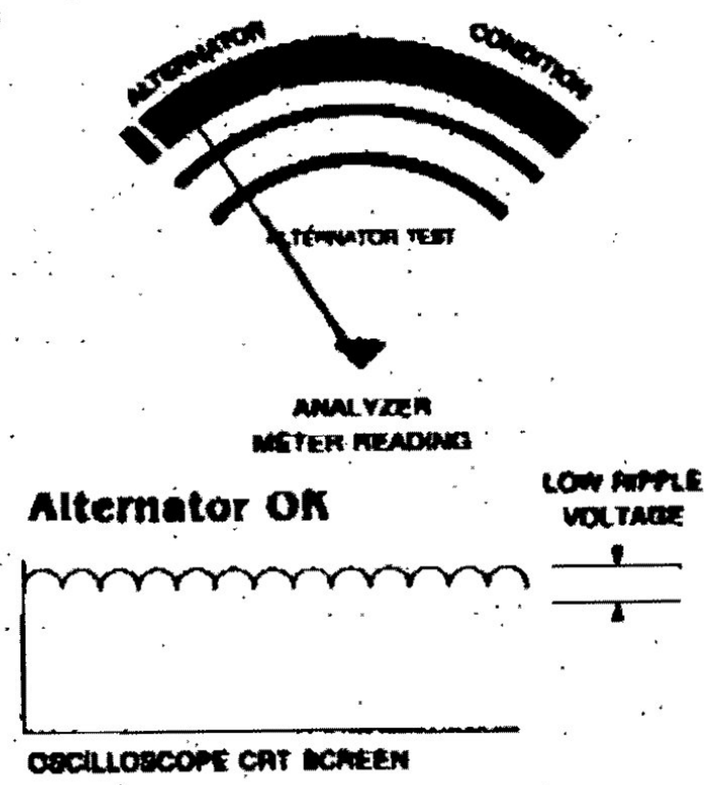

If an oscilloscope is connected to the output terminal of a properly operating alternator, the pattern displayed on the CRT Screen would appear as shown. The rectified DC output current will have small peaks as shown by the area marked "Low Ripple Voltage".

Fig. 3

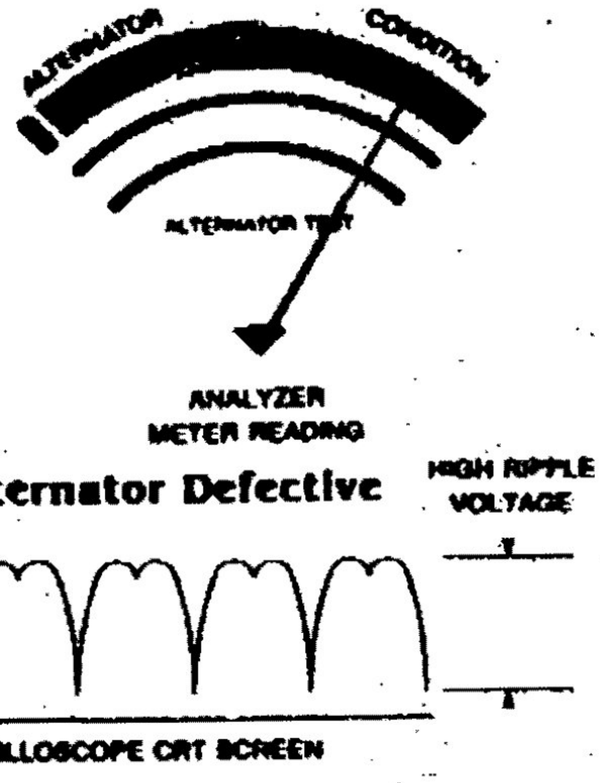

If one of the diodes is open or shorted or some of the stator windings are shorted or open, the alternator's current will be affected, with a corresponding increase in the amplitude of the ripple pattern.

Before performing any tests, a careful thorough visual inspection of the Alternator and wiring should be made first. Check Alternator belt for proper tension. Check Alternator pully and mounting bolts. They should be tight. Be sure charging system wiring and Battery cables are in good condition and all connections clean and tight.

3

TESTS

ALTERNATOR RIPPLE VOLTAGE TEST FOR ALL VEHICLES.

1. Start and run engine at fast idle. Turn headlights "on". Turn test selector switch to "ALT." position. Open jaws of inductive probe and place alternator output wire or battery ground cable in the opening - close jaws completely, see Fig. 4 & 5.

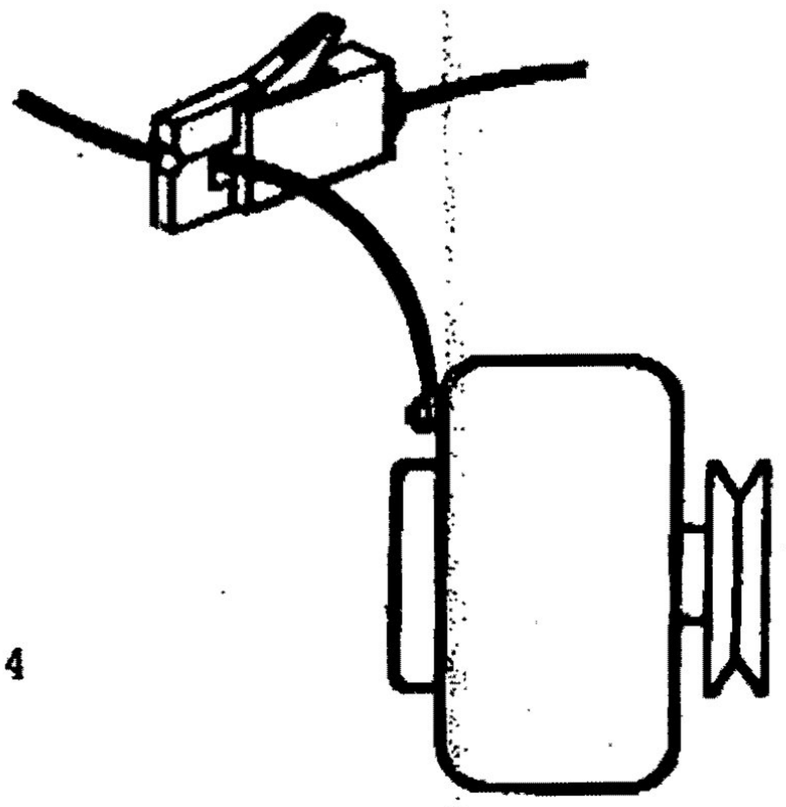

Fig. 4

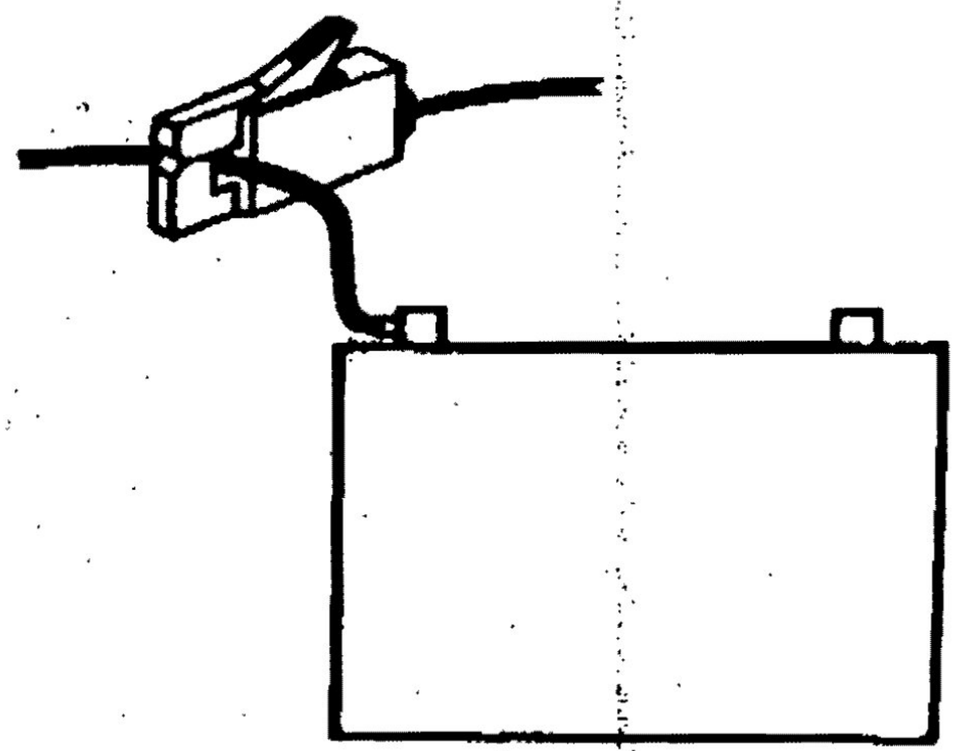

Fig. 5

IMPORTANT: DO NOT clamp onto the wire or cable. The wire or cable must be in the opening when jaws are closed, see Fig. 6.

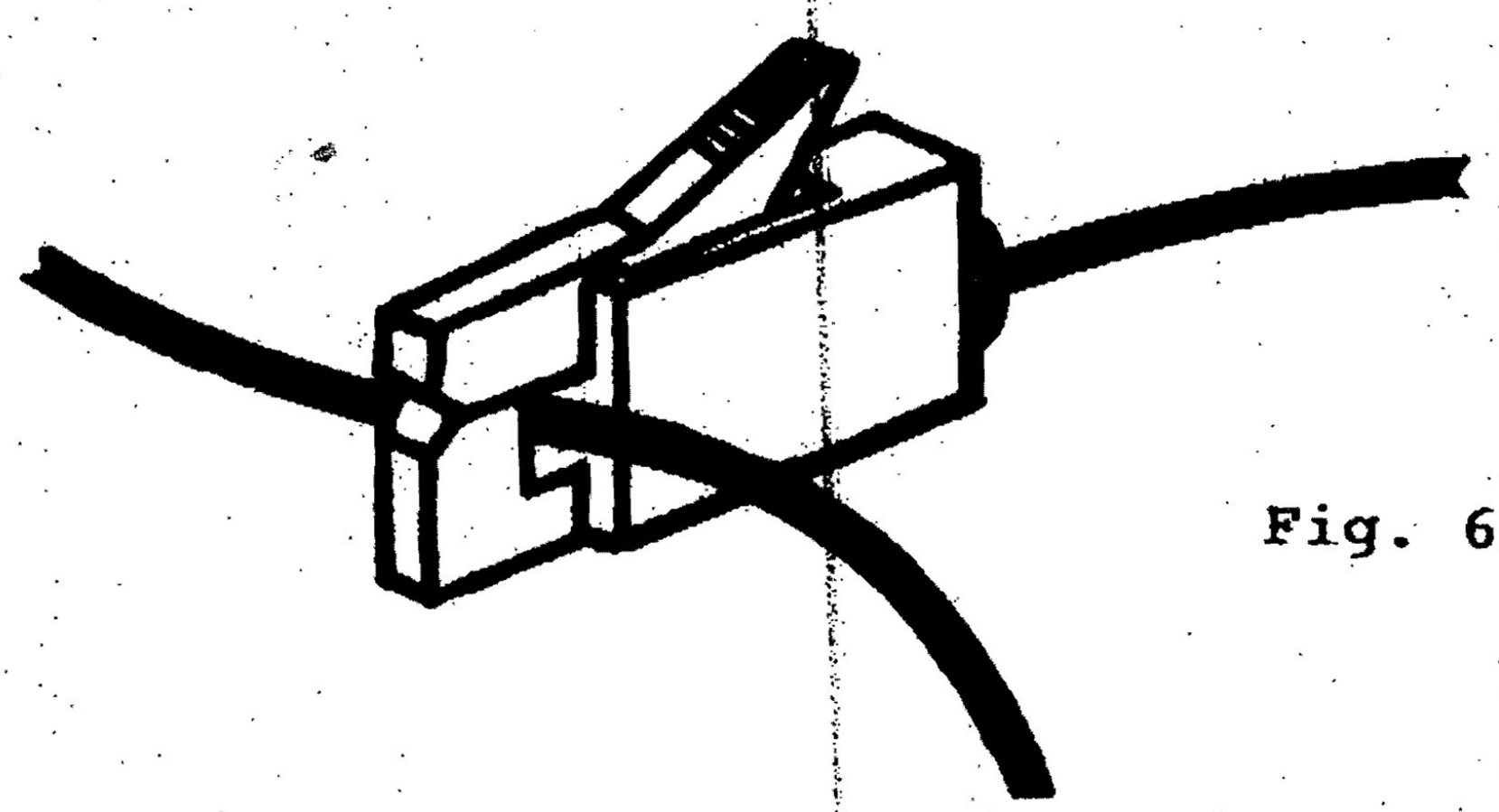

Fig. 6

Read "ALTERNATOR" Band on meter dial.

2. If the Meter Pointer is in the green zone (low ripple voltage) - Alternator condition is normal.

3. If the Meter Pointer is in the large red zone (high ripple voltage) - Alternator is defective (diodes, winding, etc.) either repair or replace the alternator.

4. If the Meter Pointer is in the extreme left red zone - bypass the voltage regulator according to the alternator or vehicle manufacturers instructions and repeat test.

   A. If the Meter Pointer is in the green zone (low ripple voltage) - Alternator OK, Voltage Regulator is defective.

   B. If the Meter Pointer is in the large red zone (high ripple voltage) - Defective Alternator and Voltage Regulator.

   C. If the Meter Pointer is in the extreme left red zone - Regulator OK, Defective Alternator.

5

TESTING DIODE TRIO TYPE ALTERNATORS, MOTOROLA AND OTHERS.
FOR DELCO-REMY "SI" UNITS, GO TO NEXT TEST.

The diode trio is usually a separate unit in the Alternator but not inside the Voltage Regulator.

1. Connect the black voltmeter clip to the negative battery post and red voltmeter clip to the positive battery post.

   Insert "Motorola Adapter" (provided) into the trio test lead.

2. Locate Trio terminal by refering to the alternator or vehicle manufacturers specifications.

   Connect the clip from the "Motorola Adapter" to the "Trio" terminal or post on the alternator (see Fig.7).

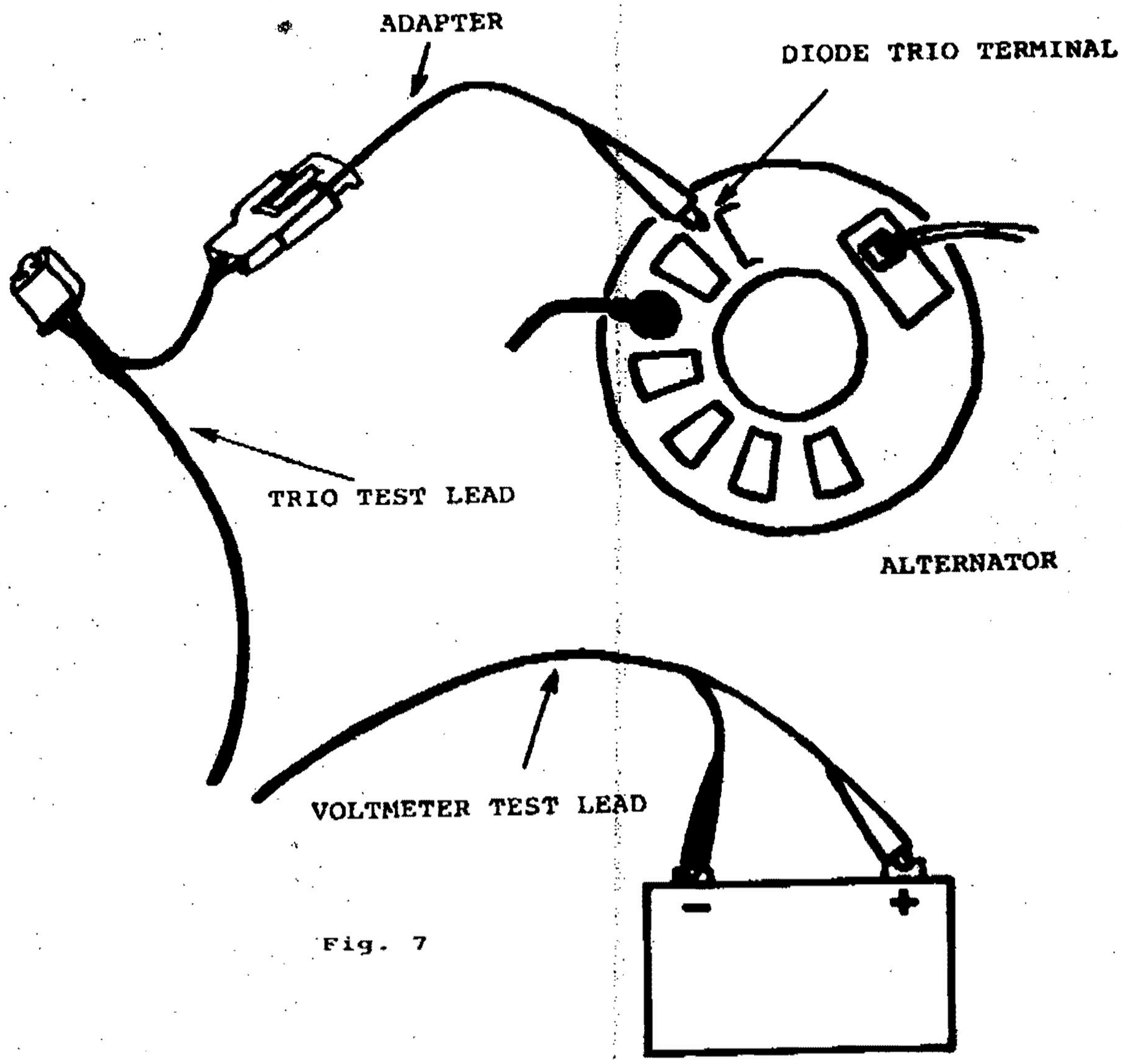

Fig. 7

6

3. Turn the test selector switch to "Trio" position and read "Diode Trio" band on the meter dial while engine is running.

   A. NO MOVEMENT of the meter pointer or if it reads in the green zone - alternator, diode trio is OK.

   B. Meter pointer in the "Red" zone - defective diode trio, repair alternator.

TESTING DIODE TRIO IN DELCO-REMY "SI" ALTERNATORS

1. Connect the black voltmeter clip to the negative battery post and red voltmeter clip to the positive battery post.

2. Disconnect the two wire connector from the Alternator and insert the female "Trio" test plug into the alternator. Plug the connector removed from the alternator, into the other end of the "Trio" Test Lead, (see Fig. 8).

3. Turn the test selector switch to "Trio" position and read "Diode Trio" band on the meter dial while engine is running.

   A. NO MOVEMENT of the meter pointer or if it reads in the green zone - alternator diode trio is OK.

   B. If the meter pointer is in the "Red" zone-diode trio is defective, repair alternator.

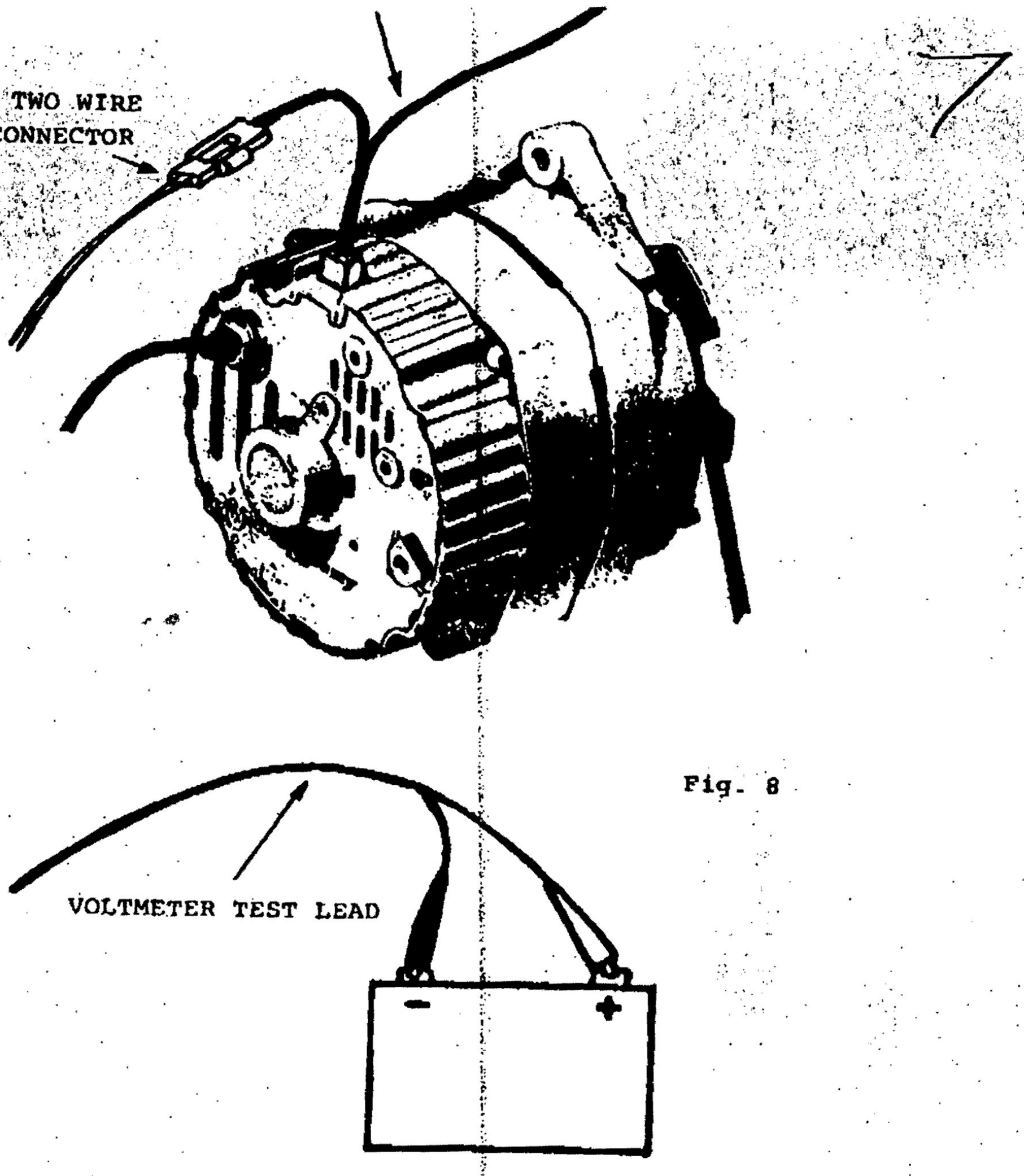

Fig. 8

8

WIRING TEST (HARNESS) ON DELCO-REMY "SI" ALTERNATOR CHARGING SYSTEMS.

This tests the wiring to the two wire connector plugged into the alternator. These wires eventually lead to a junction block and the alternator output terminal/positive battery post (see Fig. 1 & 9).

1. Connect the black voltmeter clip to the negative battery post and the red voltmeter clip to the positive battery post.

2. Disconnect the two wire connector from the alternator and insert female "Trio" test plug into the alternator. Plug the connector removed from the alternator into the other end of the "Trio" Test Lead, (see Fig. 9).

3. Turn the test selector switch to "ALT". position, push harness test button and read "Alternator" band on meter dial.

A. If the meter pointer is in the extreme left "red" zone - defective alternator.

B. If the meter pointer is in the "green" zone - alternator is "OK" - repair wiring to the two wire connector plugged into the alternator.

C. If the meter pointer is in the large "red" zone - defective alternator and wiring, repair as necessary.

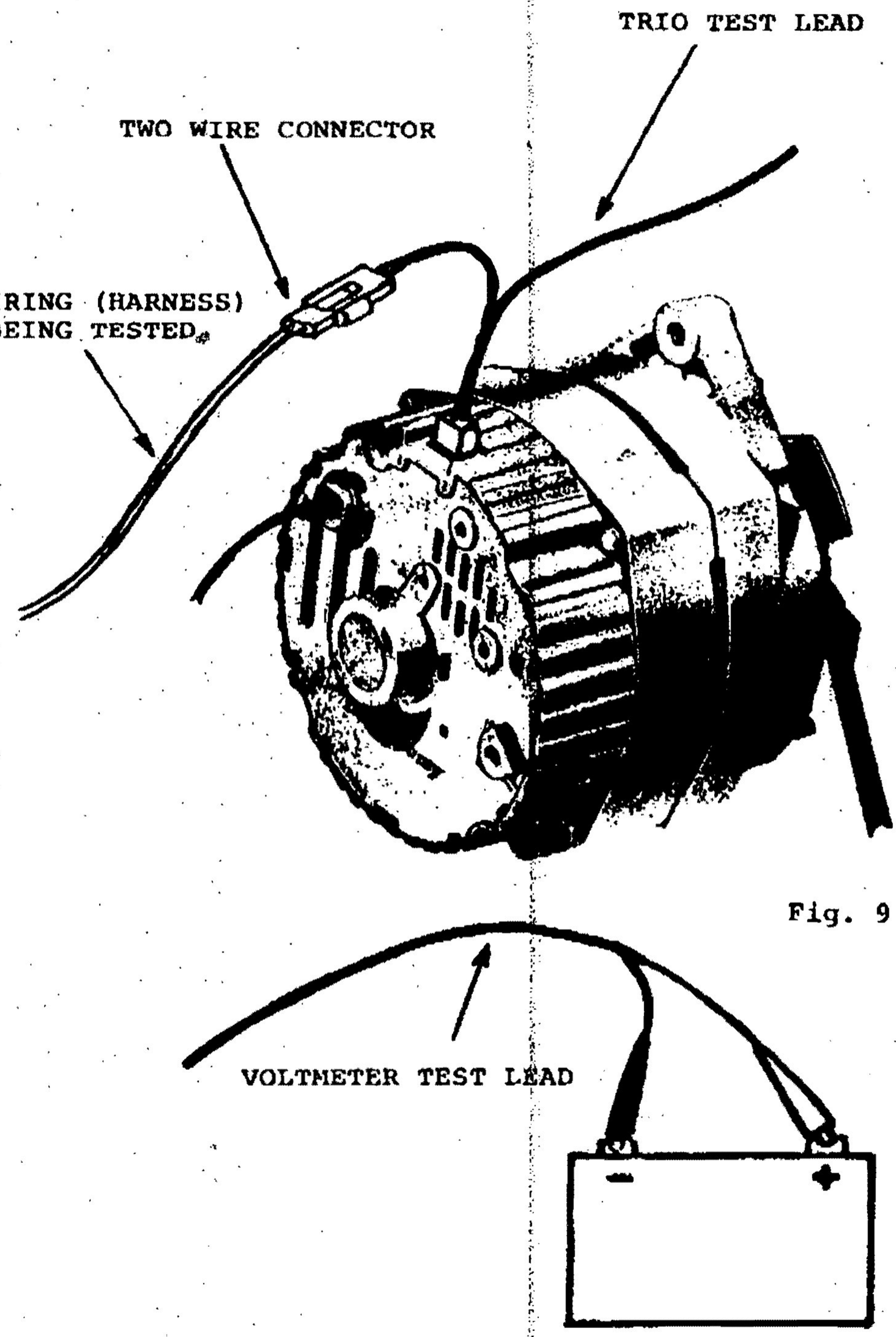
TRIO TEST LEAD
TWO WIRE CONNECTOR
WIRING (HARNESS) BEING TESTED.
VOLTMETER TEST LEAD
-
+

Fig. 9

10

VOLTAGE REGULATOR TEST

1. Connect the black voltmeter clip to the engine ground and the red clip to the alternator output terminal, (see Fig. 10).

2. Start and run the engine at approximately 2000 R.P.M. Turn the test selector switch to the voltage position and read the volts scale.

3. Compare the voltage reading to alternator or vehicle manufacturers published specifications. The reading should be steady and reasonably close to the published specification. On positive ground systems-reverse test leads.

Readings significantly higher or lower than manufacturers specification indicate a defective or improperly adjusted voltage regulator.

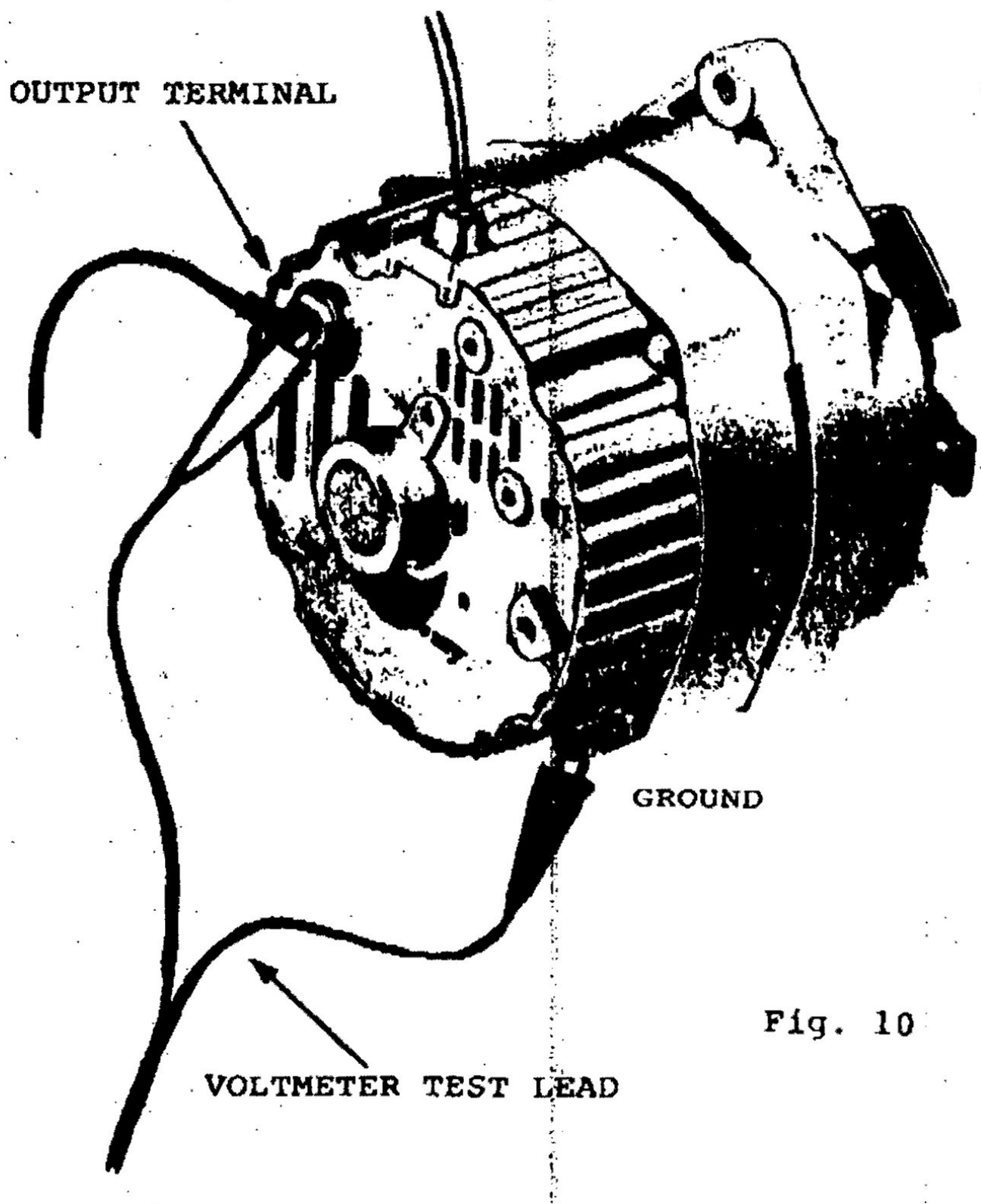

Fig. 10