OPERATION MANUAL

•wabash ipm®

200 E. Daniels Road
Palatine, Illinois 60067

new

OT-0047
STATOR TESTER

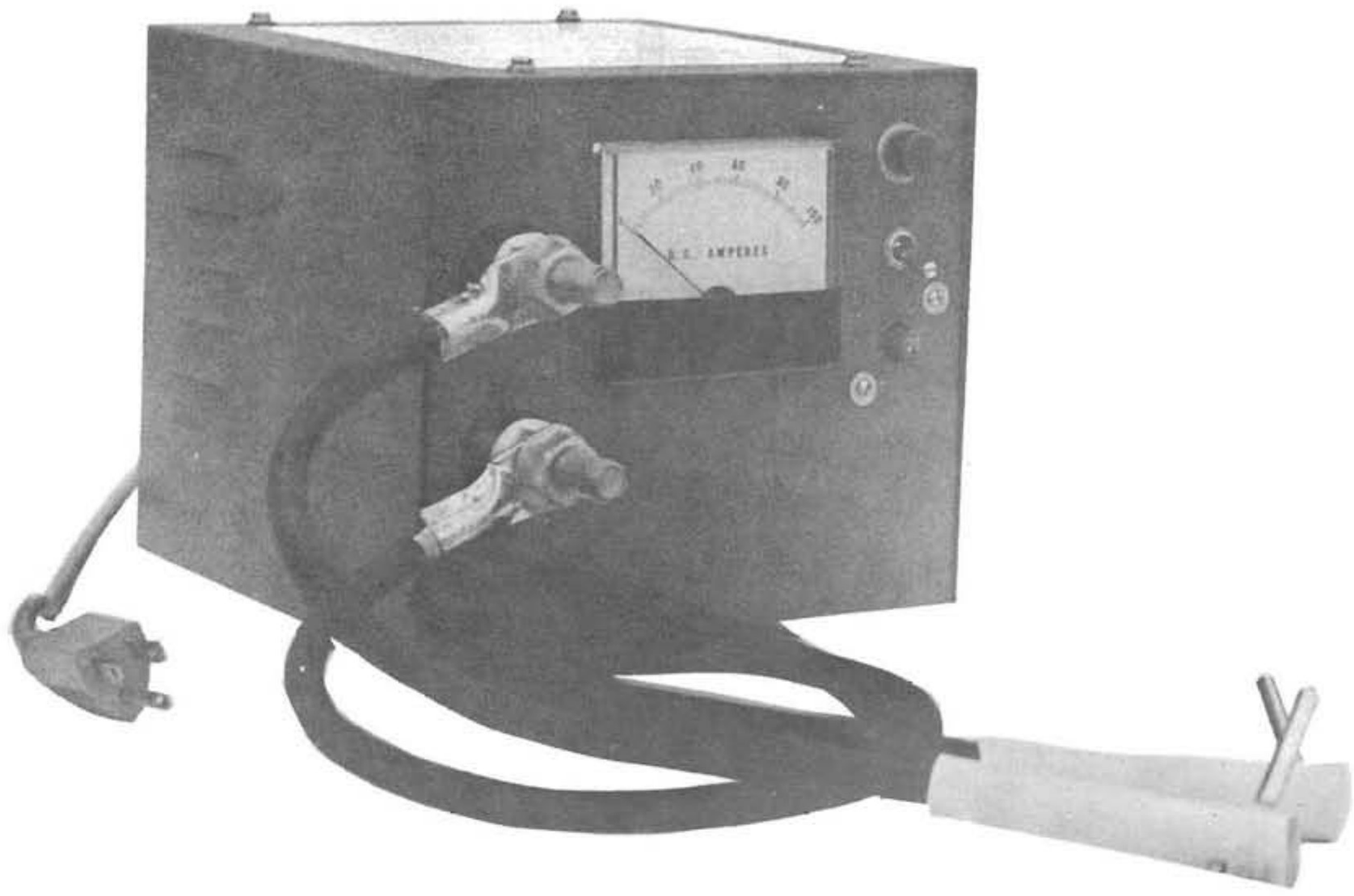

Electrical Rebuilder's ERA FOUNDED 20[illegible] ASSOCIATION

CHECK LIST

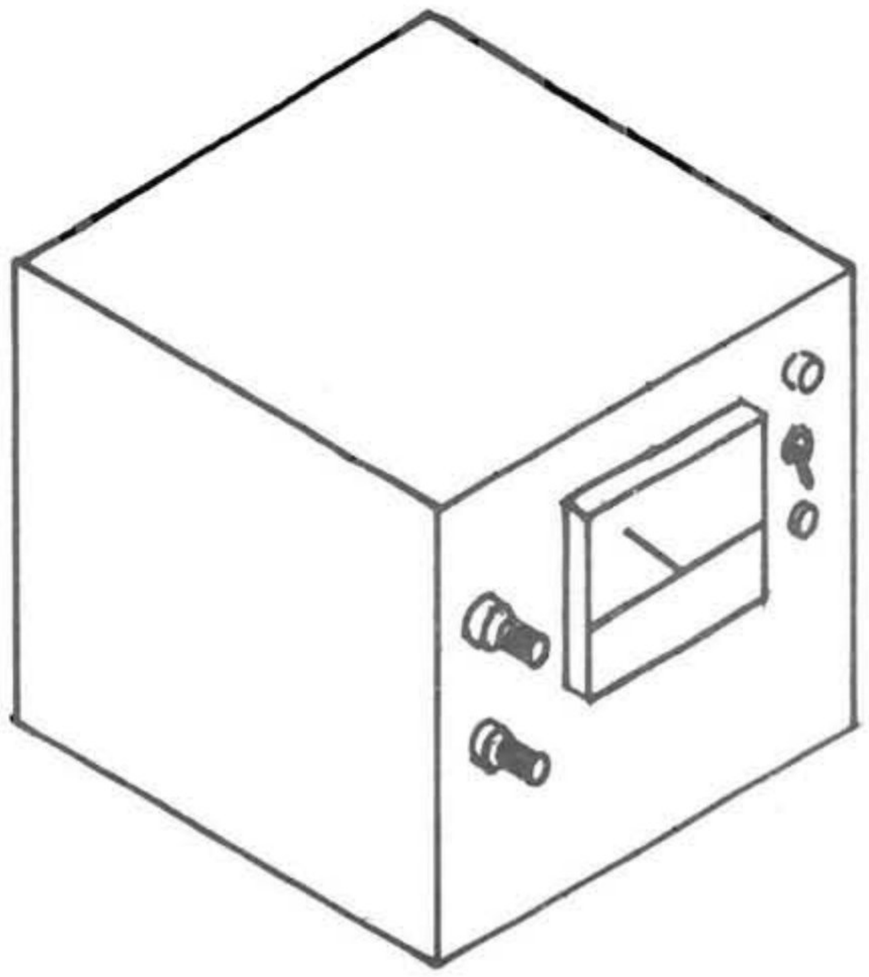

OT-0047

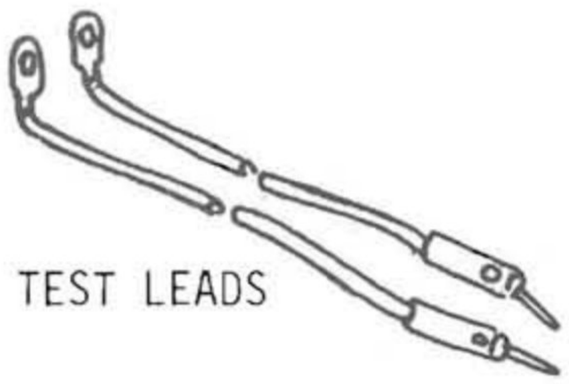

TEST LEADS



SEE ME FIRST
INFORMATION



OPERATION MANUAL



WARRANTY

Electrical Rebuilder's ERA FOUNDED 2001 ASSOCIATION

OPERATION INSTRUCTIONS

GENERAL DESCRIPTION

The OT-0047 Stator Tester checks stators by the high amperage method. It will check stators for shorts, grounds and open circuits. Condition of stator is indicated by an amp meter. A pilot light indicates power is on. The higher the reading of the stator the higher the output.

HOOK-UP

Plug power cord into 110 volt AC circuit. Turn power switch to on position and the green pilot light should come on indicating the tester is ready for operation.

CAUTION:
DO NOT leave leads connected to stator terminals longer then 5 seconds as high current could damage stator or tester. Additional heat build up will cause abnormal readings in each step of the test. Also do not let the leads make contact with each other while tester is on or damage may occur to the tester.

CHECKING

Turn power switch on, the green pilot light should come on. If green light does not come on, push the red circuit breaker button (located below the power switch). If green light still does not come on, check light bulb behind green lens. If light bulb is bad, replace with a 1889 bulb only.

To check meter, test a stator that is known to be good.

STEP 1. Touch test leads to two stator terminals and read amp meter.

STEP 2. Repeat Step 1 with two other stator terminals.

STEP 3. Repeat Step 1 with last two stator terminals.

STEP 4. Compare amp readings of all three steps. All the readings should be the same and should be between 30 and 80 amps, depending on stator output. The higher the reading the higher the output, if all 3 readings are the same.

OPERATION INSTRUCTIONS

SAMPLE TEST
Touch test leads to two stator terminals three different times

EXAMPLE: A and B
B and C
A and C

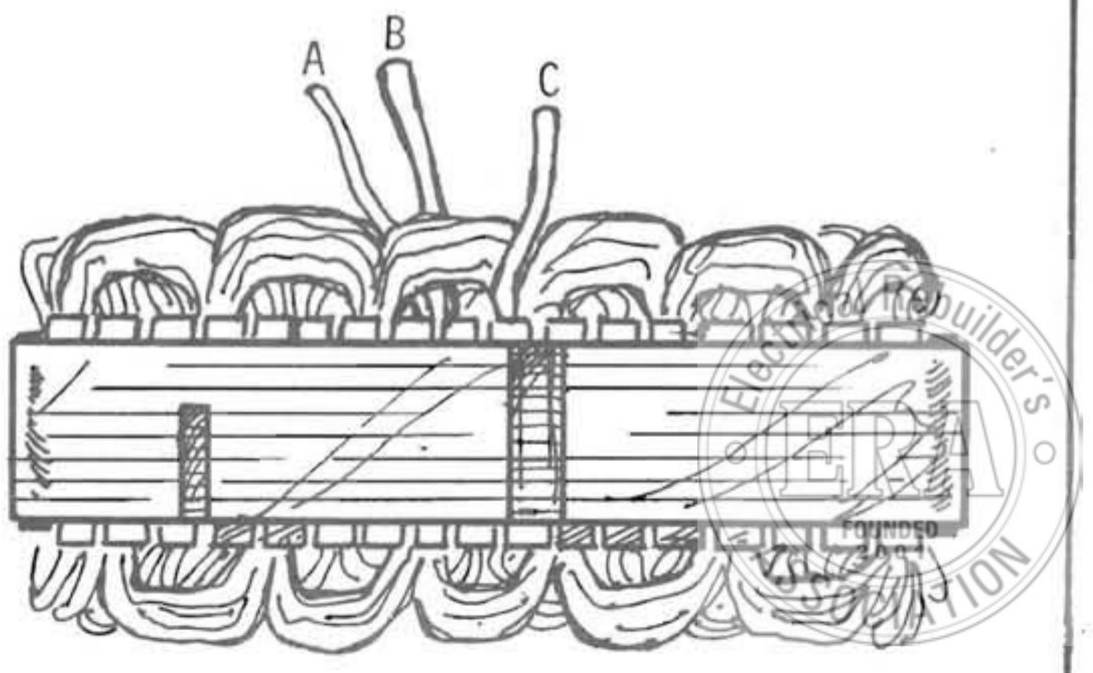

EXPLODED VIEW

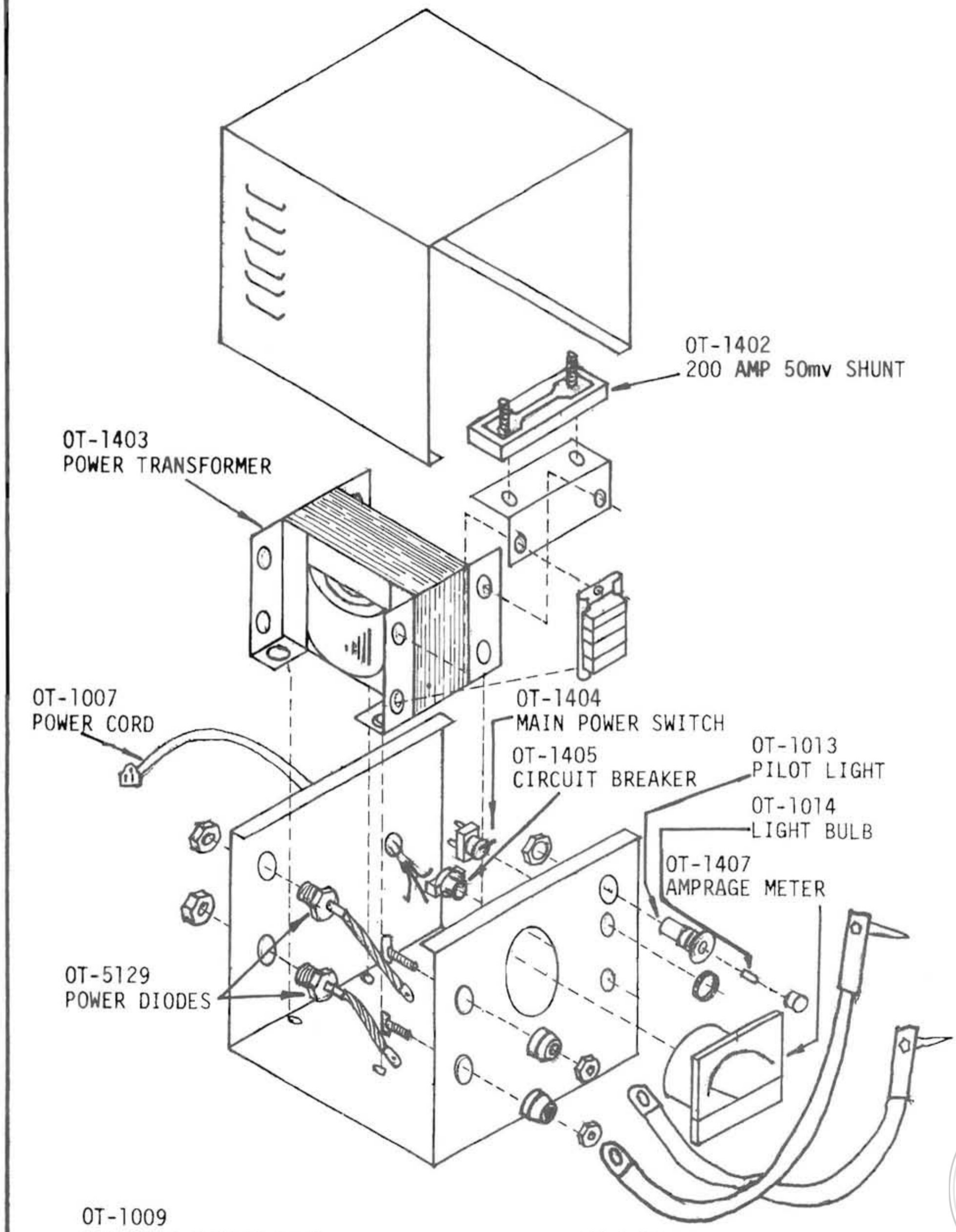

OT-1009
ADHESIVE RUBBER FOOT
NOT SHOWN

OT-1406
TEST LEADS SET COMPLETE

Electrical Rebuilder's ERA FOUNDED 2001 ASSOCIATION

PARTS

PART NO.	QUANTITY	DESCRIPTION
OT-1007	1	Power Cord
OT-1009	4	Rubber Feet
OT-1013	1	Pilot Light
OT-1014	1	Light Bulb
OT-1402	1	200 Amp 50mv Shunt
OT-1403	1	Power Transformer
OT-1404	1	Main Power Switch
OT-1405	1	Circuit Breaker
OT-1406	2	Test Leads Complete
OT-1407	1	Amperage Meter
OT-5129	2	Power Diodes

TERMINAL STRIP ON TRANSFORMER

CAUTION: Unplug the AC power cord before touching the terminal strip. DO NOT move transformer wires from terminal strip.

The OT-0047 comes factory set with the No. 5 wire connected to terminal No. 3. This accomodates average variations in AC line voltage.

To raise DC voltage that is low due to low AC line voltage, move wire No. 5 from terminal 3 to the terminal 2.

To lower DC voltage that is high due to high AC line voltage, move wire No. 3 from terminal 3 to terminal 4.

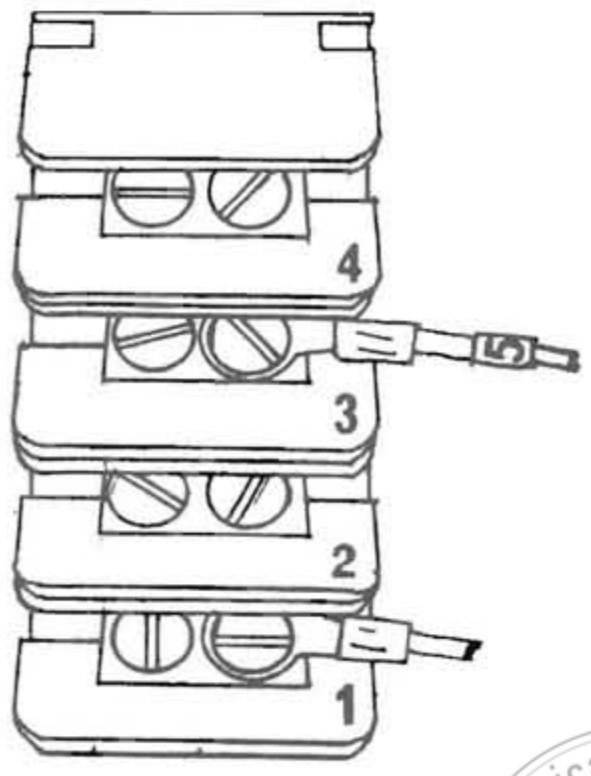

Electrical Rebuilder's ERA FOUNDED 2001 ASSOCIATION

TROUBLE SHOOTING GUIDE

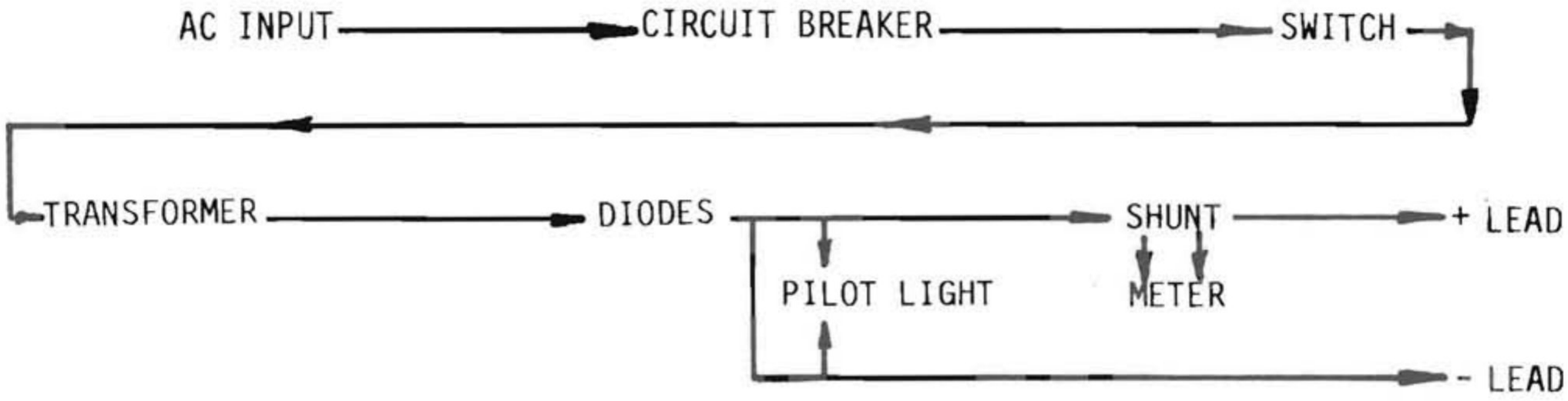

WIRING DIAGRAM

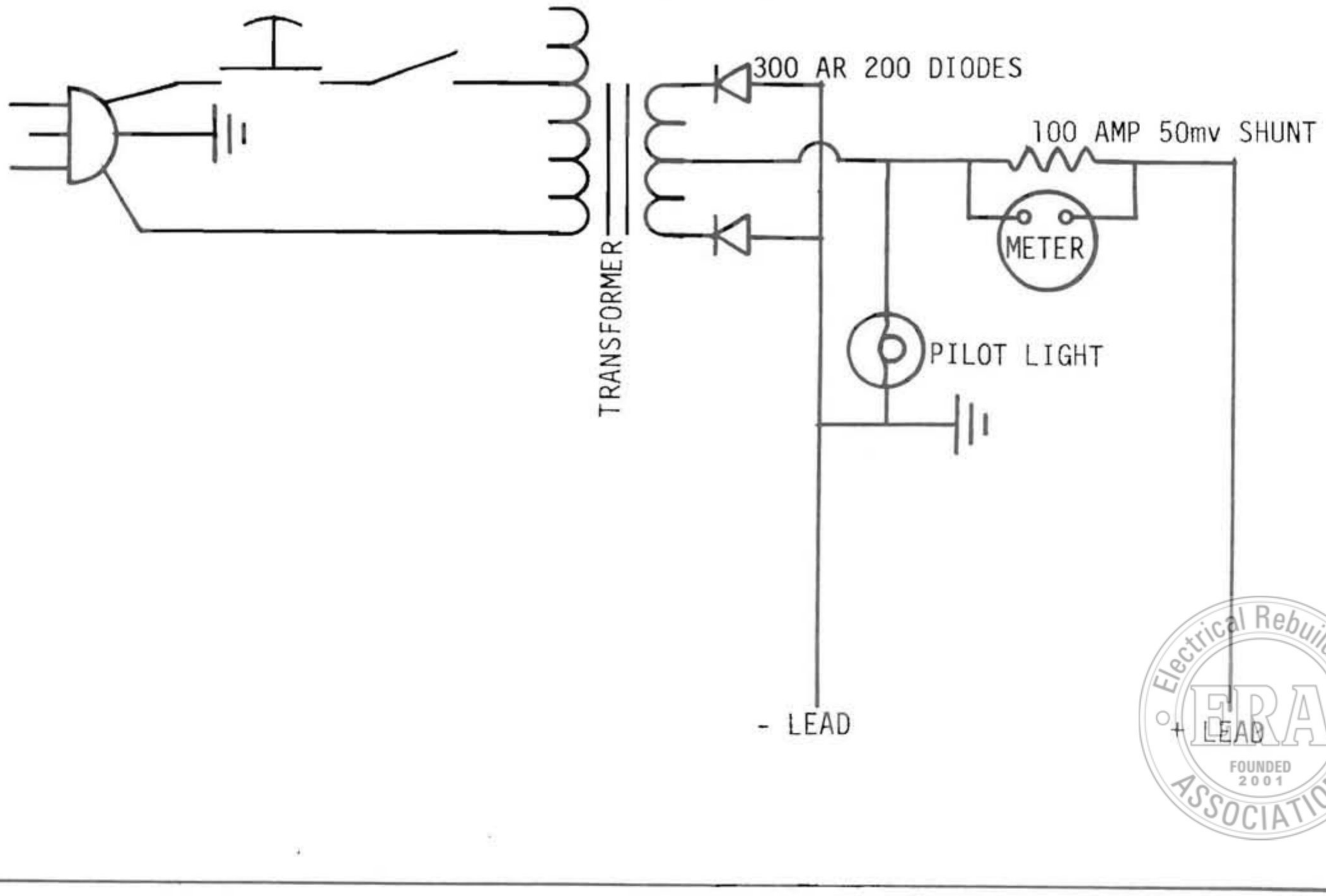

Electrical Rebuilder's ERA FOUNDED 2001 ASSOCIATION

SEE ME FIRST !!!

Plug power cord into 110 volt AC circuit.

Turn power switch on, the green pilot light should come on. If green light does not come on push the red circuit breaker button (located below the power switch). If green light still does not come on, check light bulb behind green lens. If light bulb is bad, replace with a 1889 bulb only.

To check meter, test a stator that is known to be good.

STEP 1. Touch test leads to two stator terminals and read amp meter.

STEP 2. Repeat Step 1 with two other stator terminals.

STEP 3. Repeat Step 1 with last two stator terminals.

STEP 4. Compare amp readings of all three steps. All the readings Should be the same and should be between 30 and 80 amps.

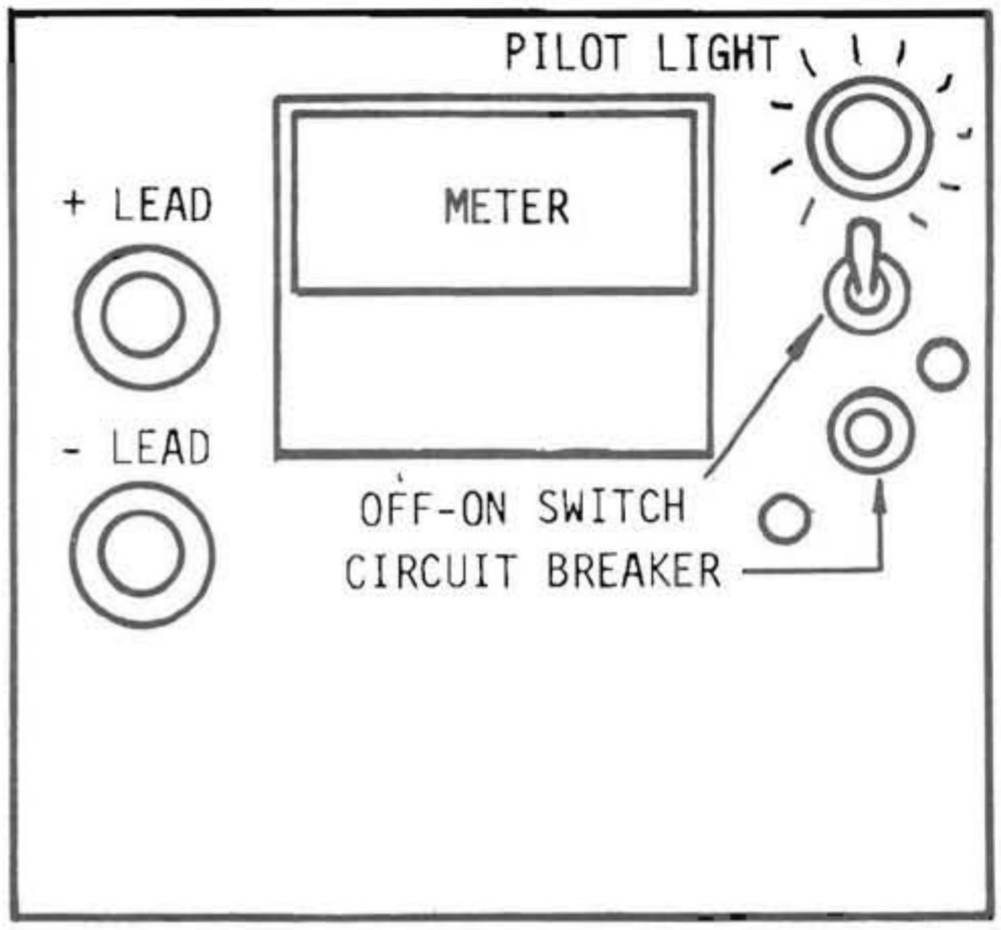

SAMPLE TEST

Touch test leads to two stator terminals three different times
EXAMPLE: A and B
B and C
A and C

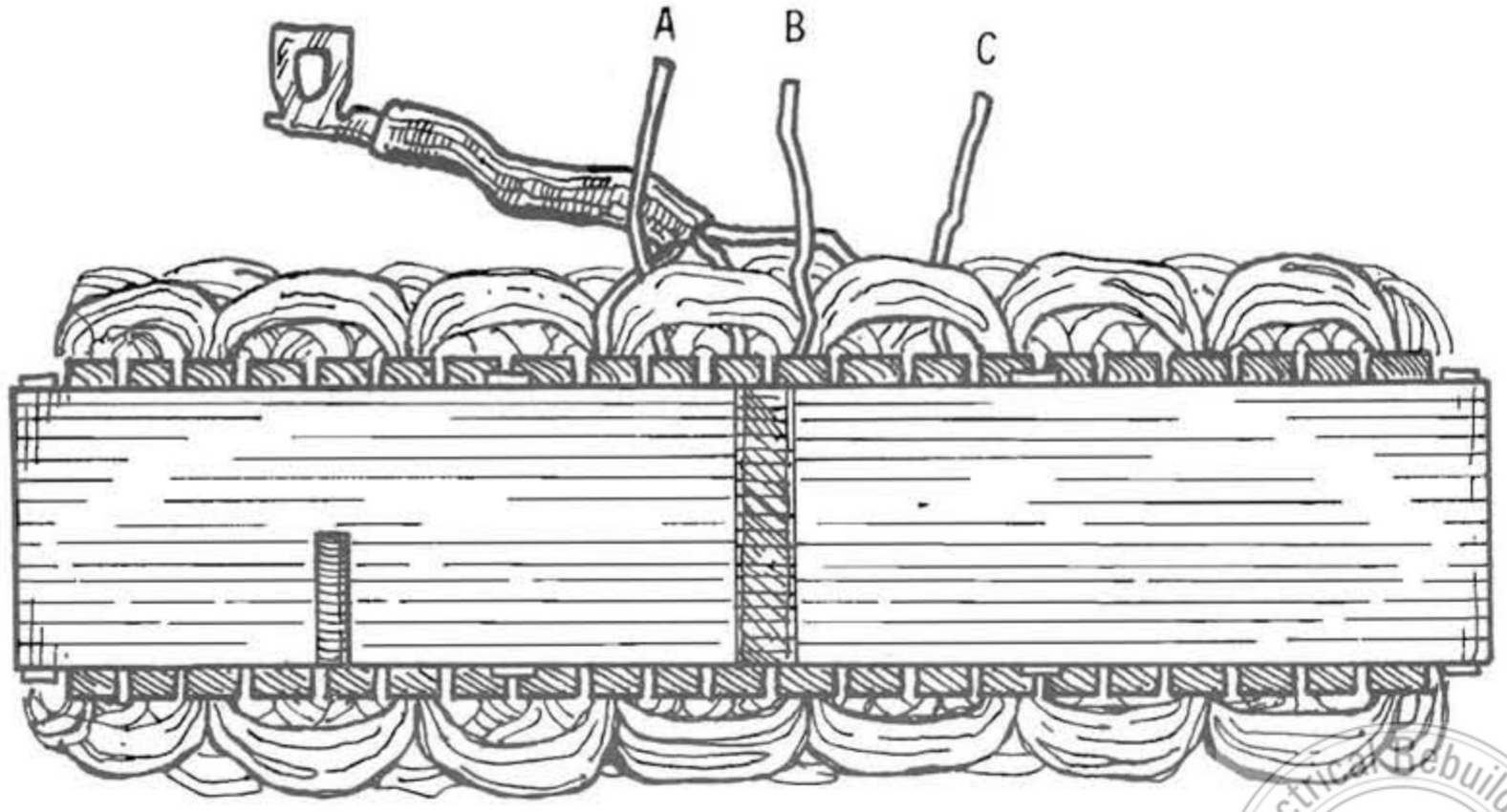

IF THE ABOVE DOES NOT OCCUR CONTACT WABASH IPM
ILL. (312)359-4710 OUT OF ILL. (800)323-7590

Electrical Rebuilder's ERA FOUNDED 2001 ASSOCIATION

•wabash **ipm®**

200 E. Daniels Road
Palatine, Illinois 60067

DISTRIBUTION CENTERS

Palatine Distribution Center 200 E. Daniels Road, Palatine, Il. 60067 312/359-4710 Toll-free 800/323-7590
Atlanta Distribution Center 3960 Shirley Drive S.W., Atlanta, Ga. 30336 404/691-0524
Dallas Distribution Center 151 Regal Row Suite 101, Dallas, Tx. 75247 214/630-3050
Los Angeles Distribution Center 6233 East Randolph Street, City of Commerce, Ca. 90040 213/725-0404
Northeast Distribution Center 611 Hollywood Avenue, Cherry Hill, NJ. 08002 609/665-8722

Electrical Rebuilder's ERA FOUNDED 2001 ASSOCIATION